Brown AND Caldwell

Prepared for
Silicon Valley Clean Water

April 3, 2017

FINAL

Redwood City Pump Station - Project Planning Report

FINAL

SVCW Conveyance System Program
Redwood City Pump Station
Project Planning Report

Prepared for

Silicon Valley Clean Water

Redwood City, CA

April 3, 2017

FINAL

SVCW Conveyance System Program
Redwood City Pump Station Project Planning Report

Prepared for
Silicon Valley Clean Water
Redwood City, CA
April 3, 2017

3/31/17

Project Team
SVCW Project Manager: Bob Donaldson
Project Manager: Charlie Joyce
Project Number: 150072

Brown AND Caldwell
201 North Civic Drive, Suite 300
Walnut Creek, CA 94596
Phone: 925.937.9010
Fax: 925.937.9026

Table of Contents

List of Figures

List of Tables

List of Abbreviations

AASHTO	American Society of State Highway and Transportation Officials
ADWF	average dry weather flow
ANSI	American National Standards Institute
ASCE	American Society for Civil Engineers
BC	Brown and Caldwell
BIIS	Bair Island Inlet Structure
BPS	Belmont Pump Station
CBC	California Building Code
CCO	Contract Change Orders
CEQA	California Environmental Quality Act
CFGC	California Fish and Game Code
CPT	Cone Penetrometer Tests
CSMP	Conveyance System Master Plan
dBA	A-weighted decibels
e.g.,	example
etc.	etcetera
FEF	Flow Equalization Facility
FEMA	Federal Emergency Management Agency
FM	force main
ft	feet
ft/s	feet per second
GDR	Geotechnical Data Report
GIR	Geotechnical Interpretive Report
H_2S	hydrogen sulfide
HDPE	High Density Polyethylene
HI	Hydraulic Institute
HMI	human machine interface
HP	horsepower
HVAC	heating, ventilation, and air conditioning
IHSP	Inner Harbor Specific Plan
ILS	Influent Lift Station
JPA	Joint Powers Authority
LEL	lower explosive limit
L_{eq}	Equivalent Noise Level
LCC	Life Cycle Cost
LUST	leaking underground storage tank
MBTA	Migratory Bird Treaty Act
MCBS	mechanically cleaned bar screens
MCC	motor control center
mgd	million gallons per day
MIC	microbiologically influenced corrosion
MPPS	Menlo Park Pump Station
NFPA	National Fire Protection Association
O&M	operations and maintenance
P&IDs	process and instrumentation diagrams
PCB	polychlorinated biphenyl
PDWF	peak dry weather flow
PG&E	Pacific Gas and Electric Company
POR	Preferred Operating Range
ppmv	parts per million by volume
psi	pounds per square inch
PWWF	peak wet weather flow
RCPD	Redwood City Police Department
RCPS	Redwood City Pump Station
Regional Board	Regional Water Quality Control Board
RLS	Receiving Lift Station
SBSA	South Bayside System Authority
SCADA	Supervisory Control and Data Acquisition
SCPS	San Carlos Pump Station
SRF	State Revolving Fund
SVCW	Silicon Valley Clean Water
TM	Technical Memorandum
US-101	U.S. Highway 101
VFD	variable frequency drive
WBSD	West Bay Sanitary District
WEF	World Environment Federation
WWTP	wastewater treatment plant
YBM	Young Bay Mud

Executive Summary

The Redwood City Pump Station (RCPS) is a new pump station that will replace the existing pump station at its current site near the Redwood City police station to accommodate future projected flows and changes in the overall Silicon Valley Clean Water (SVCW) Conveyance System. This RCPS Project Planning Report is intended to be used for several purposes including: documenting the status of RCPS Project development for use when the RCPS Project design is funded, fulfilling State Revolving Funding (SRF) planning loan compliance and construction loan application requirements, and as background information should the RCPS Project be completed through the use of a design/build method of project delivery. The RCPS Project Planning Report discusses the RCPS Project's background and purpose, setting, compiled data and assumptions, project specific analyses completed to date, the selected RCPS Project description, cost estimate, schedule and next steps for progressing the design.

Background

The SVCW conveyance system transports raw wastewater from its "Member Agencies" (City of Belmont, City of San Carlos, City of Redwood City and West Bay Sanitary District [WBSD]) to the SVCW wastewater treatment plant (WWTP). Four pump stations convey flow to the SVCW WWTP through the conveyance system force main (FM): Belmont Pump Station (BPS), San Carlos Pump Station (SCPS), RCPS, and Menlo Park Pump Station (MPPS). These pump stations and force mains will require upgrades since the pump stations are at the end of their useful lives and cannot meet the 2040 projected flows. An analysis was conducted to identify alternatives to improve the conveyance system that may reduce impacts to residents, businesses and other facilities. The alternatives analysis identified over 140 combinations of pipeline alignments and pump station locations that included different construction methods and modes of operation (e.g., gravity and pressure conveyance and configuration and location of conveyance storage).

The proposed overall Wastewater Conveyance System and Treatment Reliability Improvement Project, hereinafter referred to as the proposed Conveyance System Project, consists of the replacement/rehabilitation, repurposing, or elimination of existing pump stations, improvements to the existing WWTP, and replacing portions of the existing force main pipeline with a deep gravity pipeline and new force mains. The proposed Conveyance System Project is characterized by major conveyance components including installing a new gravity pipeline, receiving lift station (RLS), flow diversion facilities, influent connector pipes, and the replacement, rehabilitation or re-purposing of the four pump stations. Figure ES-1 shows a schematic of the proposed Conveyance System Project.

Figure ES-1. Schematic diagram of the proposed Conveyance System Project

(Source: Kennedy/Jenks Consultants)

Recommended RCPS Project

The proposed Conveyance System Project includes upgrades and improvements at many of SVCW's existing conveyance facilities, and also involves construction of new facilities. This Project Planning Report is focused on the improvements at RCPS, which is one component of the proposed Conveyance System Project, and is referred to herein as the RCPS Project. The proposed RCPS Project includes major upgrades and improvements to maintain long-term operation of the pump station and conveyance system. The existing pump station building would remain on the site and be repurposed to house the new electrical equipment, standby power generator and other ancillary items needed for the long-term operation of the new pump station. A proposed layout of the upgraded pump station is shown on Figure ES-2. A new pump station structure would be constructed adjacent and to the west of the existing RCPS building and would include coarse screening of the wastewater flow and two new wet wells that contain dry weather and wet weather pumps. Coarse screens, with bar spacing of approximately 0.75-inches, will be located at this pump station to remove large solids, rags and debris that are contributed by the jail facilities upstream. Coarse screening is included in this component to protect the pumps from clogging.

Additional above grade improvements include installation of surge control tanks, screenings building, chemical storage facility, fuel tank, exterior façade upgrades to the existing pump station building, flood protection improvements, onsite storm water management, seismic building upgrades, security fencing and lighting, and limited landscaping (if space allows). New facilities that would be placed

within the existing RCPS building include a chemical addition, chemical odor scrubber, exhaust fans, electrical equipment and a standby power generator.

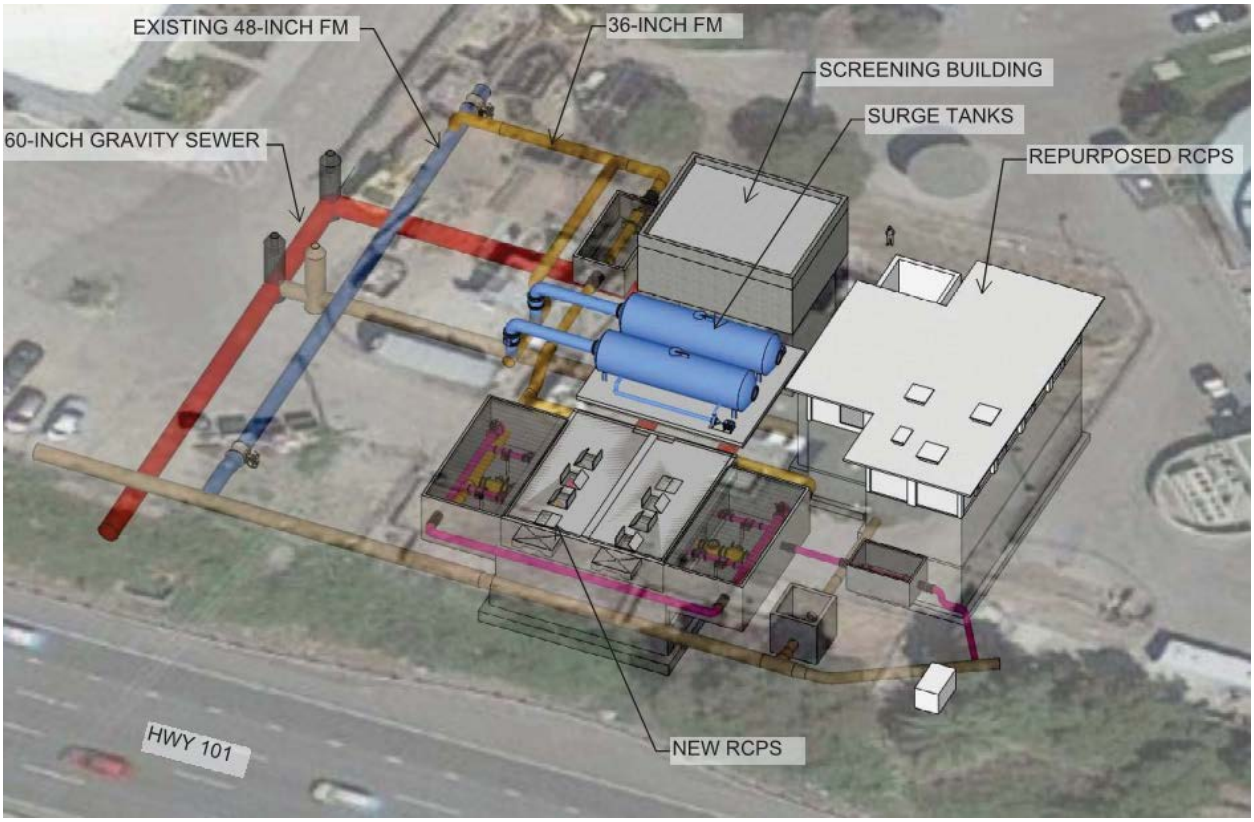

Figure ES-2. Overall RCPS layout – plan view

The RCPS will be capable of pumping flows from the Redwood City collection system to the gravity pipeline Bair Island Inlet Structure (BIIS). Combined flow from the RCPS and the rest of the conveyance system will flow by gravity to the WWTP, where the RLS will pump flow from the gravity pipeline into the WWTP Headworks facility. This represents a change from existing conditions and previous plans for the conveyance system, which required the RCPS to pump into the combined force main that leads to the WWTP, with no sections of the conveyance system utilizing gravity flow.

Additionally, there will be operational changes at the RCPS. During wet weather events, the MPPS will pump to the RCPS (as opposed to the BIIS via the 48-inch force main), and the RCPS will pump Redwood City and re-pump flows from WBSD to the BIIS. This approach is needed because projected flow increases for the City of Menlo Park will increase flow and velocity in the 33-inch force main between the MPPS and the RCPS thereby increasing head loss. To convey wet weather flows from the MPPS to the BIIS (via the 48-inch force main), the MPPS would require a significant increase in pump size to overcome increased head loss, resulting in the need for a new larger pump station. In addition to the requirement for larger pumps, there is concern about the existing 33-inch force main's ability to reliably operate at pressures in excess of 20 pounds per square inch (psi). By re-pumping the MPPS flow at RCPS, the overall pressure in the 33-inch force main will be reduced, allowing for postponement of the rehabilitation of the 33-inch segment of force main and allows reuse of the existing MPPS rather than constructing a larger pump station.

Each wet well at the RCPS could consist of four submersible pumps: two five (5) mgd pumps and two 20 mgd pumps in each wet well, for a total of eight pumps. The combination of eight pumps operating would convey 60 mgd from both the Redwood City and Menlo Park collection systems (via the MPPS) during Peak Wet Weather Flow (PWWF).

Project Schedule and Budget

The schedule of work for the RCPS was developed as part of the proposed Conveyance System Project schedule. Currently, design development for the RCPS is scheduled to begin in April 2017. Bid and award of the RCPS will occur in March 2019. Construction will begin in April 2020 and be complete in February 2023.

Brown and Caldwell (BC) developed a Class 3 cost estimate (as defined by AACE International) for the new RCPS in April 2016. The capital costs were originally developed in 2016 dollars, but were escalated to 2021, which is the midpoint year of construction. Table ES-1 summarizes the construction costs, soft costs, 2016 capital costs, and escalated capital costs for the new RCPS.

ES-1. RCPS capital cost

	Total Net Cost
Total Construction Cost	$19.6M
Contingency and Soft Cost Subtotal (25% and 43% of Construction Cost)	$4.9 M $8.4M
2016 Capital Cost	$32.9M
2021	$40.0M
Market Fluctuation Ranges[1]	$38.8M - $43.6M

1. *Market fluctuations developed by SVCW. Source: SVCW Conveyance System Construction Cost Analysis, Front of Plant, Revision Date: April 22, 2015, Revision 28b.*

Outstanding Issues to Carry into Subsequent Design

Several items will need further refinement and coordination with SVCW. These items include, but are not limited to hydraulic modeling, pump selection, overall wet well dimensions, available pump manufacturers, capacity of each bar screen, odor control sizing and hydraulic transient analysis. Additional design aspects to consider include equipment removal and maintenance access, site grading, architectural features to match the surrounding area, and storm water management. Additionally, the flow rate at which WBSD flow will need to be repumped at the RCPS will be reviewed as part of predesign. Construction sequencing must be planned carefully so that the transition from the existing RCPS to the new RCPS is done with minimal disruption to the Redwood City collection system and the conveyance system. In addition, further geotechnical, overall pump station condition and seismic retrofit evaluations are recommended to progress the design.

Section 1
Introduction

This Project Planning Report discusses the RCPS Project, under which the RCPS will be replaced to reliably pump dry weather flow from Redwood City, and wet weather flows from Redwood City and the WBSD to the WWTP. The RCPS is one component in the proposed Conveyance System Project; other projects are discussed in separate Project Planning Reports.

The RCPS Project Planning Report is intended to be used for several purposes including: documenting the status of project development for use when the project design is funded, fulfilling SRF planning loan compliance and construction loan application requirements, and as background information should the RCPS Project be completed through the use of a design/build method of project delivery. Project Planning Reports for the other elements of the Conveyance System have been prepared as separate documents. The Project Planning Report discusses the following topics:

- **Section 1 – Introduction:** The proposed Conveyance System and RCPS Project's background and purpose.
- **Section 2 – Setting:** The RCPS Project's setting including physical, institutional and interproject setting.
- **Section 3 – Compiled Data and Assumptions:** Compiled data and assumptions including planning and design parameters and assumptions and a summary of field investigations.
- **Section 4 – Project Specific Analyses:** RCPS Project specific analyses including alternatives analysis, siting evaluation and hydraulic analysis.
- **Section 5 – Selected Project Description:** Selected RCPS Project description including a written description of the recommended RCPS Project alternative, major components, conceptual drawings, process and instrumentation drawings, design criteria, major equipment, useful life of the RCPS Project, equipment replacement frequency, site layout, energy, constructability, construction sequencing and additional design considerations.
- **Section 6 – Cost Estimate and Schedule:** Cost estimate and schedule including life cycle costs and a planning level schedule for design and construction.
- **Section 7 – Outstanding Project Issues:** Next steps for subsequent design including a description of unresolved issues, further field investigation, description of additional analyses, decisions required from SVCW staff or management and items critical to interproject coordination.

1.1 Background

1.1.1 SVCW is a wastewater utility in San Mateo County

SVCW is a Joint Powers Authority (JPA) that owns and operates a regional WWTP at the eastern end of Redwood Shores, within Redwood City, and related wastewater pumping and transmission facilities. SVCW treats the majority of the wastewater generated from the mid-peninsula of San Mateo County south of the San Mateo Bridge. The JPA member agencies include the cities of Belmont, Redwood City, and San Carlos, and the WBSD (which provides sanitary sewer collection services to the cities of Menlo Park, Portola Valley, and portions of Atherton, Woodside, East Palo Alto, and unincorporated areas of San Mateo County).

The individual members of the JPA own and operate the sanitary sewer collection systems within their respective jurisdictions. WBSD also owns the existing flow equalization facility (FEF) that is leased to SVCW and used to store wastewater during wet weather conditions.

1.1.2 Existing conveyance system

SVCW's existing conveyance system assets include four pump stations, one for each of the four member agencies, a wet weather booster station located in the SCPS, an influent lift station (ILS) located at the WWTP, and an approximately nine-mile-long force main. SVCW leases from the WBSD a FEF, which is an integral part of SVCW's existing conveyance system.

1.1.3 History of SVCW and the conveyance system

To understand the need for the proposed Wastewater Conveyance System and Treatment Reliability Improvement Project (the proposed Conveyance System Project) it is useful to know the history of SVCW, the assumptions used during the original design of the conveyance system, why the various components were built, and why at different times. This description of the history of SVCW will illustrate that the conveyance system is being operated in a manner different than its original design intent and, now, beyond its useful life.

Until the mid-1960's the mid-peninsula cities had their own WWTPs. Redwood City Sanitary District owned and operated the Redwood City Sewage Treatment Facility. Belmont and San Carlos owned and operated the Belmont/San Carlos Joint Sewage Treatment Facility. The developer of Redwood Shores (Mobil Land) owned the Redwood Shores Treatment Plant and it was operated by Redwood City Sanitary District. The Redwood City Sewage Treatment Facility and the Belmont/San Carlos Joint Sewage Treatment Facility separately discharged effluent to San Francisco Bay. The Redwood Shores Treatment Plant consisted of oxidation ponds and had no discharge as all the wastewater was evaporated. The level of treatment provided by these three plants and the locations of their outfalls could not meet the new stricter wastewater treatment and disposal regulations being imposed and developed at the state (Porter-Cologne Act, 1969) and federal (Clean Water Act, 1972) levels.

The Regional Water Quality Control Board (Regional Board) ordered a 10-to-1 dilution requirement for San Francisco Bay discharges. With encouragement from the Regional Board, in June 1969, the three cities formed the Strategic Consolidation Sewerage Plan Joint Powers Authority (SCSP JPA) for the purpose of addressing the new water quality regulations on a regional basis. To meet the 10-to-1 dilution requirement as soon as possible, the SCSP JPA would build connecting pipelines and a deep-water outfall for discharging the effluent from the existing three small treatment plants in advance of constructing the regional treatment plant. The site of the regional treatment plant needed to be decided so design of the new outfall could begin. After considering several sites, the SCSP JPA selected the Redwood Shores Plant site at the mouth of Steinberger Slough for the regional plant.

The pipeline consisted of six miles of reinforced concrete pipe that connected the treatment plants to the deep-water outfall located at the mouth of Steinberger Slough[1]. This new conveyance system was designed as a low pressure force main. In 1969 designs were completed for the pipeline as well as for the Redwood City Pumping Plant and the San Carlos Pumping Plant. These pumping plants were built adjacent to the respective individual treatment plants. The pump stations, pipeline, and deep water outfall were put into service in 1971. The outfall, pipeline, and the Redwood City Pumping Plant (renamed RCPS) are still in use today.

[1] It should be noted that reinforced concrete pipe was the pipe of choice when the pipeline was designed in the early 1970's. High density polyethylene (HDPE) pipe was not available in large diameters at that time. The highly corrosive nature of the Redwood Shores saline soils made steel a poor candidate for this alignment.

Concurrent with the SCSP JPA improvement plans, Belmont's capital plans anticipated needing a new pump station and a pipeline that would connect it to the Belmont/San Carlos Joint Plant until the regional plant was operational. By the time the regional plant was operational and the Belmont/San Carlos Joint Plant closed, Belmont would also need a direct connection to the new SCSP force main. Design for a new pump station and direct connection force main on the west side of U.S. Highway 101 finished in 1973. The force main consisted of two segments. The first was from the new BPS to the point of the future connection to the 54-inch force main. This section was 1,200 feet of 24-inch welded steel pipe, lined and coated with cement mortar. The second segment was downstream of the future connection point and terminated at the San Carlos/Belmont Joint Plant. In this segment the pipe size was reduced to 20-inches and the material changed to asbestos cement pipe. This change in size and material was likely due to the City wanting to reduce costs for this segment that would be used for less than 10 years.

In the mid-1970's, in response to Regional Board direction, the service area for the regional plant originally envisioned by the SCSP JPA expanded to include the West Bay Sanitary District service area. In November 1975, the members of the SCSP JPA and West Bay Sanitary District (previously named Menlo Park Sanitary District) founded South Bayside System Authority (SBSA, renamed in 2014 to Silicon Valley Clean Water) JPA as the successor to the Strategic Consolidation Sewerage Plan JPA.

The addition of the WBSD service area necessitated expanding the conveyance system to connect WBSD. Design of a 2.7-mile-long 33-inch diameter reinforced concrete pipe force main between the RCPS and the future MPPS site was completed in 1976. The pipe was put into service when the regional plant became operational in 1982. The addition of WBSD to the system required that a booster pump station be added to the force main system, as the additional WBSD flows were not anticipated in the original force main head loss and pressure calculations.

The five segments of the existing force main, with year built, are described in Table 1-1.

Table 1-1. Existing force main location, size and length

Segment	Location	Pipe Inside Diameter (ID) (in)	Year Built and Material	Age of Pipeline (years)	Length[1]	
					Lineal Feet	Miles
1	Between MPPS and RCPS	33	1977 RCP	40	14,450	2.74
2	Between RCPS and SCPS	48	1971 RCP	46	12,950	2.45
3	Between the SCPS and Belmont "T"	54	1971 RCP	46	3,550	0.67
4	Between the BPS and Belmont "T"	24	1974 WSCL/C[2]	43	1,150	0.22
5	Between Belmont "T" and SBSA WWTP	54	1971 RCP	46	15,500	2.94
				Total Force Main	47,600	9.0

Source: Based on Table 6.1 of the SVCW Conveyance System Master Plan (Winzler & Kelly, 2011)

1. *Lengths are rounded to the nearest 50 feet and tenth of a mile.*
2. *WSCL/C = welded steel, cement mortar lined and coated. Construction date estimated based on design drawings being completed in February 1973.*

In anticipation of higher flows and the higher water surface elevation of the regional WWTP, SBSA modified existing pump stations or built new one(s). The (1971) RCPS and the (1974) BPS were enlarged. A new SCPS replaced the 1971 SCPS. The MPPS was a new pump station that was subsequently modified in 1990 as part of WBSD's flow equalization project. Table 1-2 provides a summary of dates related to the pump stations.

Table 1-2. Age of existing pump stations

Pump Station	Existing Pump Station Operational	Enlarged, New or Modified	Years in Service
MPPS	1982	1990	35
RCPS	1971	1982	46
SCPS	--	1982 (new)	35
BPS	1974[1]	1982	43

1. *1974 is based on the date of the force main design drawings.*

Design of SBSA's regional WWTP was completed in December 1977 and the new plant became operational in 1982. When the regional WWTP plant was put into service, the four smaller plants were decommissioned and the new and upgraded pump stations began to pump wastewater to the regional plant.

1.2 Reasons the Project is Needed

The proposed Conveyance System Project is necessary to eliminate ongoing reliability concerns and accommodate changes in wastewater flowrates. Replacement of the conveyance system is SVCW's highest priority due to its age and continual state of failure. The existing SVCW conveyance system components are beyond their useful life. The American Society of Civil Engineers (ASCE) published a report entitled "Failure to Act" (ASCE, 2011) with the purpose "to provide an objective analysis of the economic implications for the United States of its continued underinvestment in infrastructure." Table 1-3 lists the useful life for force mains and pump stations used in the ASCE report.

Table 1-3. Useful lives of wastewater pump stations and force mains

Component	Useful Life (years)
Force Mains	25
Pumping Stations – Concrete Structures	50
Pumping Stations – Mechanical or Electrical	15

Source: Table 5 of Failure to Act, the economic impact of current investment trends in water and wastewater treatment infrastructure (American Society of Civil Engineers, 2011)

1.2.1 Force mains

SVCW's 46-year-old concrete force main is in poor condition and needs to be replaced. The pipeline suffers from several problems caused by the soils in which it is installed and the sewage characteristics. Problems have compounded, resulting in a history of numerous leaks. These leaks range from minor to the occasional catastrophic failure. Leaks require repairs along streets and in backyards and sometimes within biologically sensitive environments.

One section of the original force main that had the most leaks was replaced in 2015 with a fused-jointed high density polyethylene (HDPE) pipe. This was a 1.7-mile long portion of the 48-inch diameter force main from the RCPS to the north end of Inner Bair Island. The proposed Conveyance System Project will replace the remaining original force main that begins where the 48-inch replacement project ended (the north end of Inner Bair Island) and terminates at the WWTP.

Much of the existing force main is buried in young bay mud (YBM) soils that are poorly suited to the existing pipeline material and joint system. YBM has two main problems; it is expansive and corrosive. Expansive soils are weak, unstable, have high shrink-swell potential, and settle over time. The pipeline consists of 12-foot-long reinforced concrete pipe sections that are connected to each other with single non-restrained "O-ring" joints. The YBM soil does not provide sufficient support for the reinforced concrete pipe and its joints. This results in pipe movement and separation at the joints and is the cause of the majority of the leak events.

The bay mud soil is highly corrosive to buried steel and concrete that comes into direct contact with the soil. The pipe is also subjected to microbiologically influenced corrosion (MIC) from sewer gases inside the pipe. Internal and external corrosion of the concrete and reinforcing steel leads to more significant leaks. When surges in flow occur (such as during a power outage) the resulting pressure and vacuum surge conditions have broken the weakened pipeline resulting in major sewage spills. These types of leaks tend to be catastrophic with the potential of uncontrollable discharge of untreated wastewater to the environment.

The frequency of pipeline leaks is expected to increase as the pipe ages, given the current poor condition of the pipelines, continued movement of weak soils, and acceleration of the internal and external corrosion.

In addition to the problems related to the soil, the existing pipeline was designed as a low-pressure force main pipeline and not for typical force main pressures. When WBSD was added to the conveyance system and as wet weather flows have risen, flows in the force main have grown higher than the original design anticipated. When the WBSD flows were added, a booster pump station, and later a flow equalization facility, were added to the system.

With Herculean efforts, SVCW maintains pressures and surges in the conveyance system to within the force main's pressure limits, though this approach comes with significant risk. SVCW must carefully manage the flow in the pipeline to minimize leaks by opening and closing valves, turning on and off pumps (including the booster and influent lift pumps), diverting flow to storage, and backing up sewage in member agency collection systems. During wet weather events, wastewater flows from the WBSD collection system are diverted to the WBSD flow equalization facilities. When flows subside, the WBSD wastewater is pumped from the flow equalization facilities through the MPPS and to the treatment plant. Sometimes these pressure management efforts require using all available pumps and valves leaving limited or no backup equipment.

The reasons provided for replacing the pipelines are corroborated by industry accepted guidelines of useful life. The 46-years is well beyond a typical force main's lifespan of 25 years.

1.2.2 Pump stations

All five pump stations, the four member agency pump stations and the ILS are in varying states of condition, ranging from poor to very poor. Despite system-wide repairs and regular maintenance, the pump stations are in need of replacement to provide safe and reliable operation and to accommodate the future projected flows through the system. Each pump station is at least 35 to 46 years old, well beyond the 15-year useful life for the mechanical and electrical components, and approaching the life of the concrete structure. In most instances the condition of the equipment has degraded to the extent that the systems require extensive maintenance to ensure functionality and

reliability. To keep the pump stations operational, SVCW is spending millions of dollars to replace various pump station components, such as control systems, pumps, and valves. These components will not be used after the proposed Conveyance System Project is completed.

The solution to the current conveyance system problems SVCW is facing is to replace the original pipeline with a new pipeline that is designed for local soils conditions and system flows, and to replace or rehabilitate the pump stations. The conveyance pipeline and the pumping system improvements are interconnected and need to be planned, designed, and constructed in tandem.

1.2.3 Headworks

The proposed Conveyance System Project also includes construction of a Headworks to house screening and grit removal facilities. This process will be the first step in treatment. It removes rags, sand, grit, and debris that damage pumps and other process equipment.

The original SVCW wastewater treatment facility was built with no Headworks. The plant's current partial screening and grit removal processes continue to allow excessive downstream grit and unscreened material that cause premature wear on equipment and result in high maintenance and repair costs. Large debris and inorganic solids such as rags that are not removed by the existing screening equipment are removed manually. Manual removal of rags is labor intensive and places plant personnel in challenging work environments. SVCW recently installed new digester mix pumps, rotary screen presses, and gravity belt thickeners. This new equipment is very susceptible to damage caused by rags and debris. Without the Headworks, this new equipment will experience the same premature wear as the older equipment.

SVCW's decision to install screening and grit removal facilities was made for purposes of protecting its employees, addressing the continued high costs for labor and equipment damage, and increase the reliability of the overall treatment process. Effective screening of incoming wastewater will save both operation and maintenance costs and improve SVCW's operational capabilities.

1.3 Proposed Conveyance System Project Overview

The proposed Conveyance System Project proposes a combination of rehabilitating, repurposing, and decommissioning existing SVCW conveyance system assets, and the construction of replacement assets. Brief summaries of the major components included in the proposed Conveyance System Project are provided in the following paragraphs.

1.3.1 Pipelines

A 15-foot outside diameter tunnel will be built using a tunnel boring machine to connect the recently constructed 48-inch replacement force main (located at the northern end of Inner Bair Island) to the WWTP. The distance between top of the tunnel and the ground surface will range from 20 to 52 feet. Inside this tunnel will be a new 11-foot inside diameter gravity pipeline. This new gravity pipeline will replace the remaining portion of the 48-inch and the entire existing 54-inch force main pipelines. The BPS would be connected to the new gravity pipeline by rehabilitating the existing 24-inch pipeline and a portion of the 54-inch pipeline. The 33-inch force main pipeline that connects the MPPS to the RCPS would remain as it exists.

1.3.2 Pump stations

The MPPS and the BPS will be rehabilitated and remain as part of the proposed Conveyance System Project. A new pump station will be built on the existing RCPS site and the existing pump station building will be repurposed to house auxiliary equipment that supports the new RCPS. The SCPS will no longer be needed and will be decommissioned. Portions of the SCPS building and yard will be

repurposed to house odor control and ancillary equipment needed by other elements of the proposed Conveyance System Project. At the downstream end of the gravity pipeline, a new deep pump station (called the receiving lift station) will be built to pump the wastewater from about 60 feet below grade to the new Headworks.

1.3.3 Headworks

A Headworks facility will be constructed downstream of the receiving lift station to provide coarse screening and grit removal from the raw wastewater. This is a new treatment process being added to the WWTP treatment train. Two new large-diameter pipes will be built to connect the Headworks to the existing primary treatment process. Odor control facilities for the receiving lift station and Headworks will be installed adjacent to the Headworks facility.

1.4 Planning and Design History of the Conveyance System Project

SBSA completed a Conveyance System Master Plan (CSMP) in August 2011 to plan and program the projects required for improving its conveyance system. The recommended approach at the time was to replace the existing force main with a new force main, and to rehabilitate or replace the pump stations. Chapter 7 of the CSMP developed conceptual-level requirements for the replacement and rehabilitation of the SVCW pump stations that served as the baseline for the pump station predesign. The CSMP also identified several items that required further refinement to be completed during the design phases of the project.

Following completion of the CSMP, BC started the preliminary design of the conveyance system pump stations in 2012. An Administrative Draft of the Conveyance System Predesign Report was completed in May 2014 (BC, 2014). The proposed project at that time consisted of the following key elements and is shown in Figure 1-1.

- Pipe Modifications:
  - Rehabilitation or replacement of the Segment 1 force main between MPPS and RCPS shown as PS1 and PS2 in Figure 1-1, respectively.
  - Replacement of the Segment 2 with a new 48-inch diameter force main.
  - Installation of a 36-inch gravity line to convey flow from the Belmont Connection Point to SCPS, shown as PS3 in Figure 1-1.
  - Replacement of the Segment 3 force main with a 63-inch force main.
- Pump Station Modifications:
  - New pump station at MPPS called PS1 in predesign
  - New pump station at RCPS called PS2 in predesign
  - New pump station at SCPS called PS3 in predesign
  - Elimination of BPS. BPS replaced with a connection from the Belmont Collection System to the 36-inch gravity line.

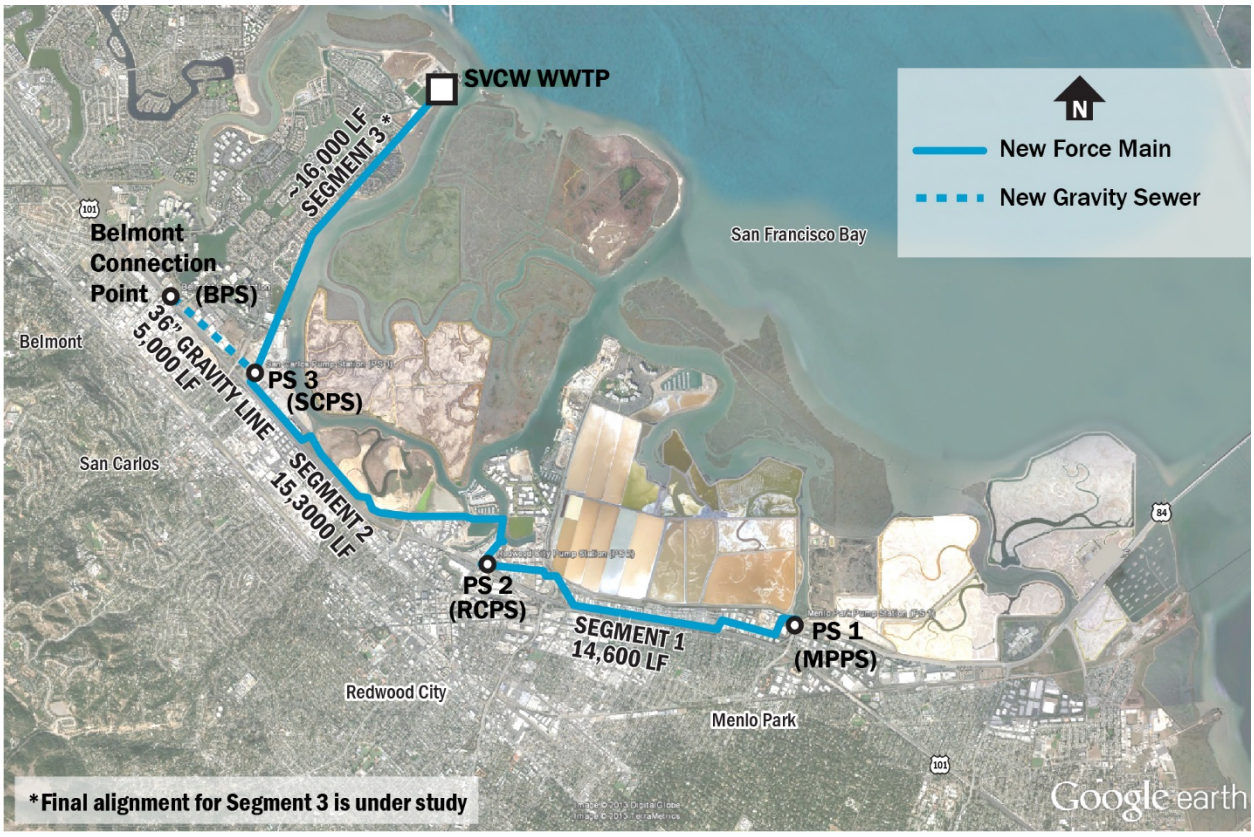

Figure 1-1. May 2014 Predesign proposed SVCW conveyance system

Following submittal of the Administration Draft, SVCW decided to place the design of the Conveyance System on hold. Technical work on the pump station predesign was stopped due to the evaluation of gravity tunnel/interceptor alternatives. The alternatives consisted of varying combinations of pump stations, gravity tunnel, and force mains to convey wastewater from SVCW's Member Agencies to the WWTP. SVCW performed a success versus risk analysis of the alternatives and selected the proposed Conveyance System Project described in Section 1.3. On May 14, 2015, the SVCW Board of Commissioners approved the proposed Conveyance System Project and granted permission to proceed with California Environmental Quality Act (CEQA) documentation and conceptual design.

BC began conceptual design of the pump stations in 2015 to support the development of the Draft Environmental Impact Report (EIR) that is required for CEQA documentation of the proposed Conveyance System Project. The Draft EIR was submitted in November 2016 (SVCW, 2016). This Project Planning Report summarizes the conceptual design as of that date. The proposed Conveyance System Project is displayed in Figure 1-2. The key elements of the proposed Conveyance System Project are described in Section 1.3.

Figure 1-2. Schematic diagram of the proposed project

(Source: Kennedy/Jenks Consultants)

Table 1-4 summarizes the major changes that occurred between the 2014 preliminary design of the conveyance pump stations and the proposed Conveyance System Project as of November 2016.

Table 1-4. Pre-design vs. proposed Conveyance System Project elements comparison

Pre-design Project element	Pre-design (2014)	Proposed Conveyance System Project (2016)
Pipes		
Segment 1 Force Main	• Replacement or rehabilitation of Segment 1 force main.	• No changes to Segment 1 force main under current project. Rehabilitation to occur in the future.
Segment 2 Force Main	• Replacement of Segment 2 force main with new 48-inch force main.	• Part of Segment 2 replaced with 48-inch force main, segment labeled as "Airport Segment Alignment" in Figure 1-2 will be replaced with gravity pipeline.
Segment 3 Force Main	• Replacement of Segment 3 force main with new 63-inch force main.	• Segment 3 will be completely replaced with gravity pipeline.
36-inch Gravity Line	• New 36-inch gravity line from BPS to SCPS. BPS flows to be pumped by SCPS.	• The 36-inch gravity line will no longer be installed. Existing 24-inch and 54-inch force mains will be rehabilitated and convey flow from BPS to the gravity tunnel.

Table 1-4. Pre-design vs. proposed Conveyance System Project elements comparison

Pre-design Project element	Pre-design (2014)	Proposed Conveyance System Project (2016)
Pump Stations		
MPPS (PS1)	• MPPS will be a new pump station called PS1.	• MPPS will be rehabilitated, but the name will not be changed.
RCPS (PS2)	• RCPS will be a new pump station called PS2.	• RCPS will be a new pump station, but the name will not be changed.
SCPS (PS3)	• SCPS will be a new pump station called PS3.	• SCPS will be repurposed to contain odor control facilities for the gravity pipeline.
BPS	• BPS will be eliminated. A connection will be made from the Belmont collection system for conveyance to SCPS.	• BPS will be rehabilitated and convey flow to the gravity pipeline at the old SCPS site.
RLS (Non-predesign item)	• Does not exist as part of pre-design.	• New RLS will be constructed to convey flow from the gravity tunnel into the new WWTP Headworks.

1.5 Project Purpose

This section discusses the RCPS Project objectives and the expected benefits for RCPS Project.

1.5.1 Objectives

The objectives of the RCPS Project are:

- Provide major upgrades and improvements to maintain long-term operation of the pump station and conveyance system. Currently, RCPS requires frequent hands-on maintenance, and there are several ongoing operational challenges with the pump station in its current configuration. The existing equipment is at or near the end of its useful life.
- Provide adequate access to RCPS. Access to the site is currently limited when flooding from storm events and/or king tides occurs near the Maple Street entrance.
- Allow the pump station to handle future projected Year 2030 flow. The existing pump station does not have the capacity to convey future flows.
- Provide the ability to pump flows from MPPS during future projected Year 2030 wet weather flows. Currently, flows are conveyed by a 33-inch force main into a larger combined force main, and subsequently to the WWTP. With flows increasing in the future, the force main (Segment 1) between MPPS and RCPS would require rehabilitation and a new pump station at MPPS to reliably convey flow to the future gravity pipeline of the proposed Conveyance System Project. By conveying flow from MPPS to RCPS during wet weather events, the pressure within the Segment 1 force main is reduced allowing the Segment 1 force main rehabilitation to be delayed into the future and MPPS to be rehabilitated rather than replaced. Delaying the Segment 1 force main and eliminating the need for a new MPPS provides a significant cost savings to the overall conveyance system program.

1.5.2 Benefits

The benefits of the RCPS Project support the proposed Conveyance System Project objectives:

- Easier, more efficient and effective operation and maintenance of facilities

- Improved safety with better access to operate and maintain facilities
- Lower impact on residences and businesses
- Ability of the new pump station to handle current and future projected flows
- Maintains gravity flow in the collection system without sanitary sewer overflows
- Allows force main rehabilitation between MPPS and RCPS to be deferred to a later date
- Allows MPPS to be rehabilitated, instead of requiring a new pump station, with a reduction of pump size due to re-pumping of wet weather flows at RCPS
- Allows SVCW to permanently remove the current booster station at SCPS from service

This page intentionally left blank.

Section 2

Setting

The following section describes the area where the RCPS is located, adjacent facilities and other features (hydrologic, geologic, topographic, etc.) that impact the RCPS Project.

2.1 Physical Setting

The existing RCPS is located at the end of Maple Street in Redwood City, adjacent to US Highway 101 (US-101). The pump station serves the City of Redwood City, the largest Member Agency of SVCW, and the portions of unincorporated San Mateo County that are connected to the Redwood City collection system.

The existing facility was originally constructed in 1969, updated in the early 1980s, with additional improvements completed in the mid-1990s. The existing pump station is to be replaced with a new pump station facility utilizing the same site. The following sections discuss the site constraints at the RCPS site that will impact the design and construction of the new facilities and considerations as the design is progressed.

2.1.1 Existing site

The existing pump station is located on a 0.55-acre parcel owned by Redwood City. The site is in a mixed use developed area and is bordered by the Redwood City police station to the north and east, US-101 to the south, and Maple Street to the west, as shown on Figure 2-1.

Figure 2-1. RCPS site overview

The site consists of the existing pump station building, a Pacific Gas and Electric Company (PG&E) transformer, electrical equipment, a standby engine generator, and fuel storage tank, six 100-horsepower (HP) pumps and various underground piping and force main connections, and biofilters for odor control, all of which are surrounded by a chain-link fence.

The site is secured with chain-link fence with two gates providing access from Maple Street. It is currently graded to drain away from the pump station building with the exception of the small chemical delivery area, which has a berm around it and a drain near the building.

2.1.2 Site features and considerations

The elevation of the RCPS site, buildings, and critical operational equipment will be evaluated during final design and adjusted as necessary to be above expected flood levels associated with the 100-year flood level, king tides and sea level rise as a result of climate change. The 100-year flood level will be determined using Federal Emergency Management Agency (FEMA) maps. The Maple Street area has experienced flooding as a result of king tides, particularly near the entrance to Docktown, which has seen several feet of flooding and can be further compounded if these high tides occur during a rain event. In addition to the 100-year and king tide flood level, the anticipated sea level rise should be evaluated during final design to determine the impact to the RCPS site and establish a site elevation to mitigate impact from such a rise. Increasing the elevation of critical equipment and structures above existing elevation on the order of 18-inches should be considered during final design.

Currently, the only access to the RCPS site is via Maple Street. SVCW staff has noted that access to the site is prevented when flooding occurs near the Docktown entrance from storm events and/or king tides. No provisions are currently in place to maintain access; therefore, final design will evaluate including a second access point to the site through the Redwood City police station secured parking lot. Establishing this access point will require coordination with Redwood City staff as well as Redwood City Police Department (RCPD) representatives to ensure security on both sites is not jeopardized and traffic flow to both sites is not impacted.

2.1.3 Existing utilities

The area of Maple Street adjacent to the RCPS site and south along US-101 is heavily congested with underground utilities such as local water, recycled water, sanitary sewer, storm water sewer, fiber optic, telephone, gas and electrical, as well as larger utility pipelines. Protecting and maintaining service of all active utilities will be required as part of the RCPS construction and will be considered during design. The following discussion summarizes the known utilities that will have direct impact on the RCPS design. The approximate locations of utilities are shown on Figure 2-2 from the Redwood City force main rerouting project. Major utility connections to the RCPS are labeled in blue below.

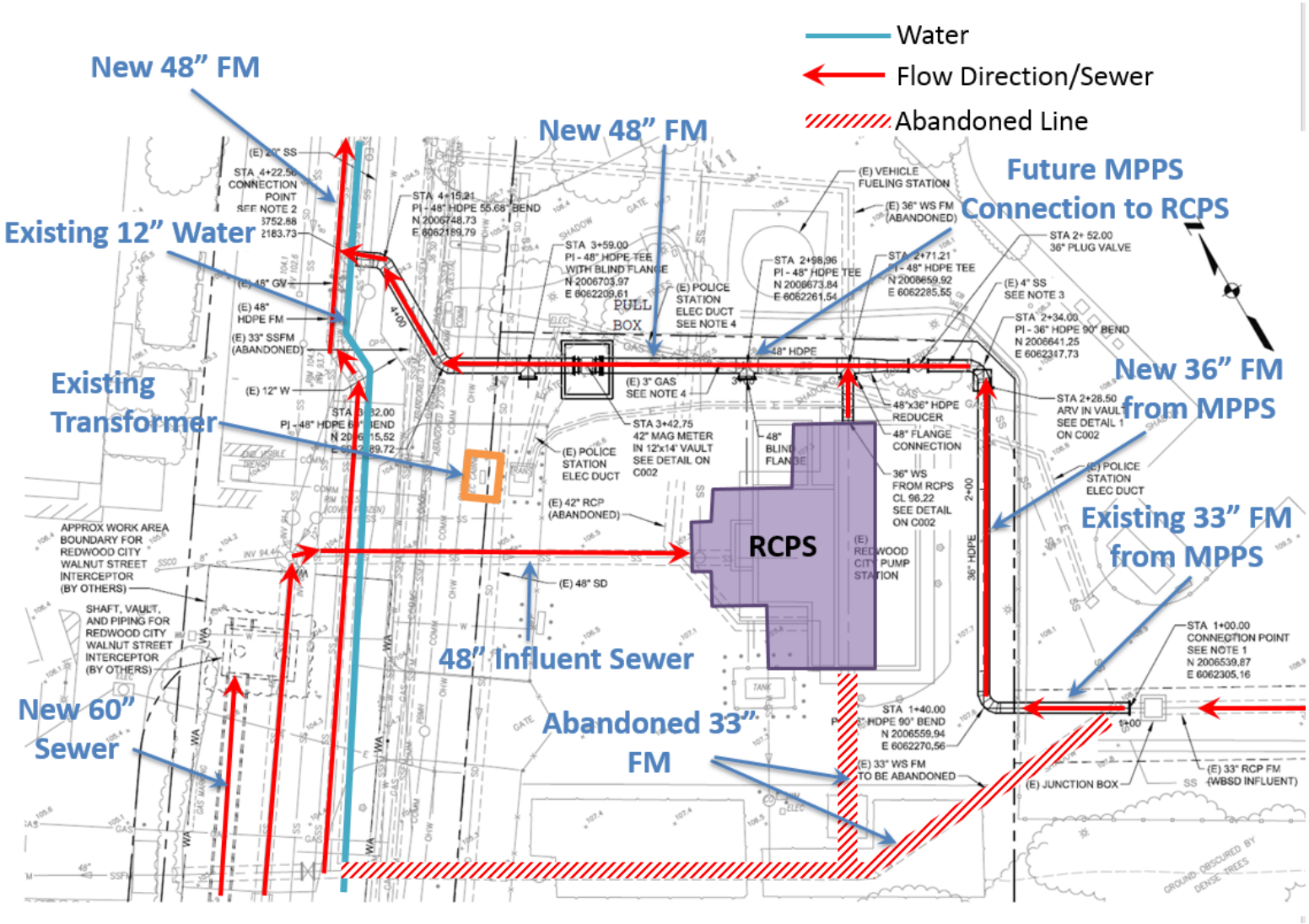

Figure 2-2. Existing RCPS utilities

(Source: Kennedy/Jenks, 2016)

This page intentionally left blank.

Under the original RCPS configuration, all incoming wastewater flows entered the pump station via a 48-inch diameter gravity pipeline and discharged into a 33-inch force main that transitions into a 48-inch force main on the south side of the site.

Redwood City is currently in the design stage for a new 60-inch diameter gravity influent sanitary sewer pipeline to replace the existing 48-inch diameter gravity influent sanitary sewer pipeline. This 60-inch diameter sanitary sewer will be constructed prior to the new RCPS. A turn-out connection will be included in the design of the RCPS influent piping to convey flow from the 60-inch diameter influent pipe into the new RCPS (not pictured in Figure 2-2).

As part of the improvements to SVCW's conveyance system, the existing 48-inch diameter force main on the downstream side of the RCPS, between RCPS and the north end of Inner Bair Island has been replaced with a new 48-inch force main.

The 33-inch force main upstream of RCPS that conveys flows from MPPS failed and was leaking. The pipe was replaced with a section of new 36-inch force main on the southeastern side of the site and 48-inch force main on the northeastern side of the site in 2016 as part of an emergency project. The new 48-inch force main is connected to the 48-inch force main on Maple Street.

Electrical service is provided by PG&E, and the location of the existing transformer is immediately outside of the RCPS fence, south of the northern access gate, as shown in Figure 2-2

Potable water service for the RCPS is currently provided from a 12-inch water main on Maple Street. The existing RCPS does not have recycled water service.

2.2 Institutional Setting

2.2.1 Redwood City General Plan and Inner Harbor Specific Plan

Per the California Governor's Office of Planning and Research, cities are required to prepare a local general plan. The Redwood City General Plan was adopted on October 11, 2010 and is the "blueprint for what Redwood City will be, a visioning document that guides the growth and development of Redwood City through 2030."

A Specific Plan is a tool for the systematic implementation of the General Plan. Redwood City developed the Inner Harbor Specific Plan (IHSP) to guide proposed developments in the Inner Harbor area (Figure 2-3). This area consists of approximately 100 acres northeast of US-101 along Redwood Creek.

The IHSP provides guidelines and vision for the revitalization of the mixed-use Inner Harbor area with the goal of enhancing the waterfront experience. The plan addresses hazardous contamination, landscaping and tree planting guidelines, drainage including use of existing wetlands within the area, and general land use zoning and development. A public draft was released in October 2015 (MIG, 2015) and the public comment period closed on March 4, 2016. A draft of the IHSP was reviewed by Redwood City Council in May 2016, and additional public meetings were recommended to get more community feedback on the IHSP.

Unlike many specific plans, the IHSP included only two private development projects. Both property owners have opted to have their projects reviewed under the 2010 General Plan, rather than wait for the adoption of the IHSP. Therefore, no further work is currently planned to finalize the IHSP. The IHSP will be used in draft form to analyze the two projects, and the EIR developed as part of the IHSP will be used for future infrastructure planning, parks and open space planning, development and impact fees, and future environmental impact analyses. The IHSP area includes the RCPS site, and guidelines in the IHSP may be of significance to the RCPS design and construction. SVCW, as a

public agency JPA, is not subject to certain local land-use plans, policies and regulations (i.e., zoning and building codes, general plans, specific plans, and other planning and building laws), including those of its Member Agencies, under the doctrine of "intergovernmental immunity" which effectively means that a public agency implementing its basic mission and purpose does not need to obtain land use or other entitlements from other public agencies. Nevertheless, in the exercise of its discretion and in the interest of working cooperatively with local jurisdictions, the guidelines in the Redwood City General Plan and the IHSP will be considered with regards to the RCPS above grade structure and landscaping.

Redwood City staff have noted that a finish matching the adjacent Redwood City police station would likely be preferred for the above grade structure. Additionally, site landscaping should meet Redwood City's storm water requirements which include minimizing impervious surfaces and treating storm water using landscaping.

2.2.2 Current and future nearby development plans

There are several planned developments within the Inner Harbor area. As discussed in the previous section, there are two private development projects, as well as some public developments and proposed open spaces. The list below summarizes development projects in the Inner Harbor Area that may affect the site. The locations of these projects are shown on **Error! Reference source not found.**.

- **Open Space-Wetland, Open Space – Land, and Water Dependent Development-1:** The current land use for these areas west of the RCPS are a marina and live-aboard housing property. The site will be converted to support wetlands restoration, water-oriented recreation and plan for potential impacts to sea level rise (MIG, 2015).
- **Blomquist Street extension:** As development in the Bayfront Area continues, the extension of Blomquist Street westward and across Redwood Creek will be necessary to increase circulation in the area and provide additional access to the Inner Harbor area. Redwood City does not have an established time for this project and Redwood City staff have indicated it is not a near-term development project.
- **Inner Harbor-1:** This project involves the construction of residential units and open space on the site formerly occupied by open storage, and includes a Bay Trail connection along the waterfront. This project is being reviewed under the 2010 General Plan, for which a General Plan Amendment is required. The most recent planning meeting for this project was on November 15, 2016. The Planning Application Submittal was deemed incomplete. The project is in the initial planning and development stage and actual project construction timeframe is not currently known.
- **Inner Harbor-2:** This project involves the construction of office buildings and open space. Development on this site will consist of four seven-story buildings with associated parking and landscape improvements. This project is being reviewed under the 2010 General Plan, for which a General Plan Amendment is required. The most recent planning meeting for this project was on November 15, 2016. The Planning Application Submittal was deemed incomplete.

Long-term development projects and concepts will likely result in increased traffic around the site and a greater public visibility potential for the site.

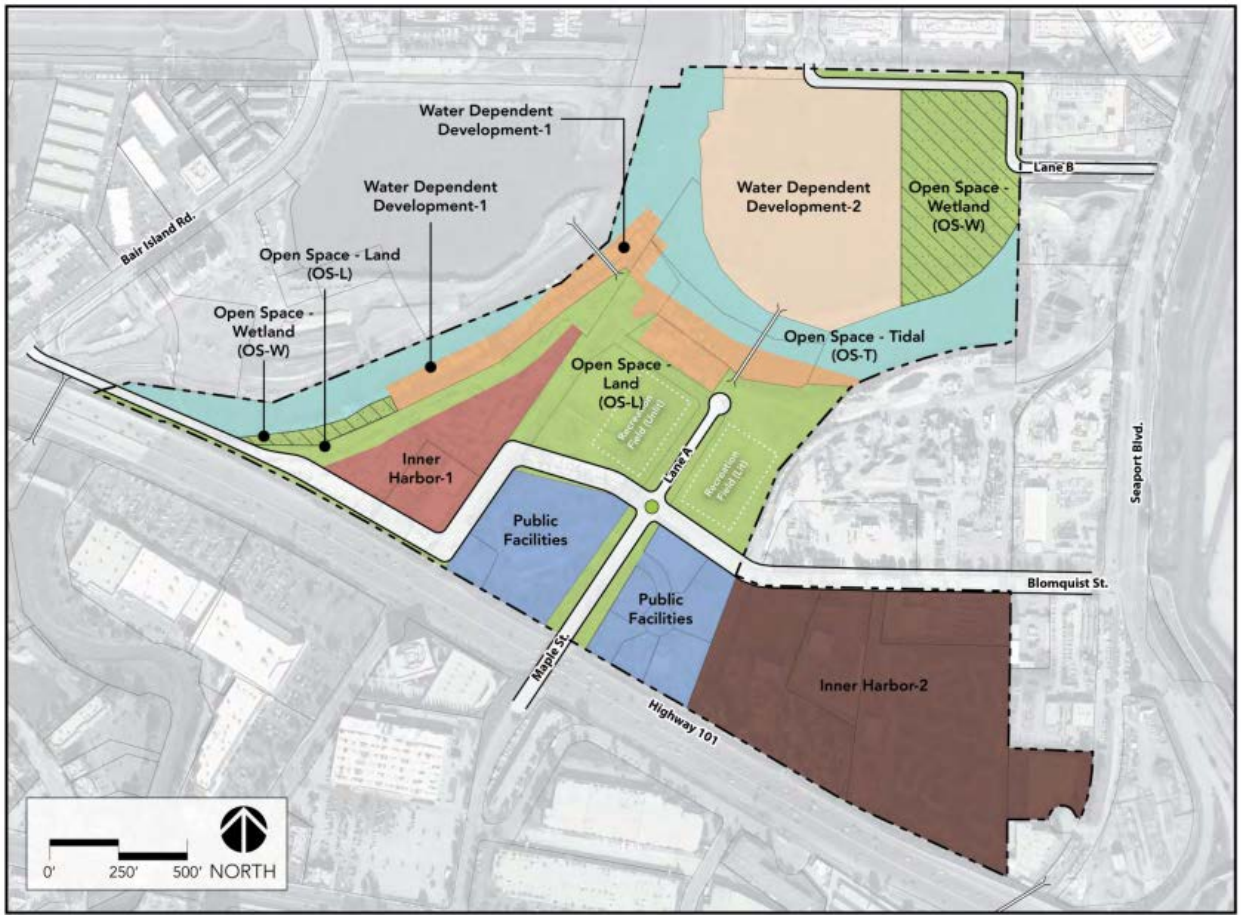

Figure 2-3. Redwood City development projects and plan areas

(Source: MIG, 2015)

2.3 Interproject Setting

RCPS is connected to the proposed Conveyance System Project in two locations.

The MPPS is located at the southernmost point of the SVCW conveyance system. An existing 2.7-mile, 33-inch force main (Segment 1 in Figure 2-4 connects the MPPS to the RCPS. The Segment 1 force main that connects the two pump stations will not be replaced as part of the proposed Conveyance System Project. The new RCPS will be built next to the existing RCPS, with the existing RCPS building repurposed to house auxiliary equipment that supports the new pump station. During dry weather flow, RCPS will pump flows from the Redwood City collection system to the gravity pipeline BIIS. Combined flow from the RCPS and the rest of the conveyance system will flow by gravity to the WWTP, where the RLS will pump flow from the gravity pipeline to the WWTP Headworks. This represents a change from existing conditions and previous plans for the conveyance system, which required the RCPS to pump to the WWTP through the combined force main with no sections of the conveyance system utilizing gravity flow.

Operational changes are proposed at the RCPS. During wet weather events, the new RCPS will pump flows from both Redwood City and WBSD. Projected flow increases for the WBSD will increase flow and velocity in the 33-inch force main between the MPPS and the RCPS thereby increasing head loss. To convey future projected flows from the MPPS through the Segment 1 force main and

throughout the conveyance system, the MPPS would require a significant increase in pump size to overcome increased head loss. The larger pumps would require modifications to the MPPS wet well, and will likely result in the need for a new pump station at this site, rather than rehabilitation.

In addition to the requirement for larger pumps, there is concern about the existing 33-inch force main's ability to maintain pressures greater than 20 psi. During recent wet weather events, a pressure of 29 psi was recorded in the 33-inch force main. While higher pressures may be permissible for a short period, it is unknown whether the force main can withstand extended periods of higher pressure. Additional investigation and determination of the maximum allowable pressure in the 33-inch force main will be completed during subsequent design.

By pumping the MPPS flow from the RCPS, the overall pressure in the 33-inch force main will be reduced, allowing for rehabilitation of the MPPS versus a new MPPS, and postponing the Segment 1 force main rehabilitation into the future.

A new 36-inch and 48-inch force main was installed at the RCPS site in the winter of 2016 following a failure in the existing force main. Previously, the 33-inch force main from MPPS (Segment 1, Figure 2-4) combined with the discharge from the RCPS at a tee, and the combined flow from the MPPS and RCPS entered a 42-inch force main on the south side of the RCPS. The 42-inch force main failed and the replacement force main was re-routed to the north side of the RCPS. A 36-inch force main was installed upstream of the RCPS discharge, and a 48-inch force main was installed for combined flows from the MPPS and RCPS. A tee was built on the rerouted 36-inch force main to provide a new MPPS connection downstream of the RCPS's influent screens in the future as shown in Figure 2-2and Figure 2-5.

Figure 2-4. SVCW existing conveyance system

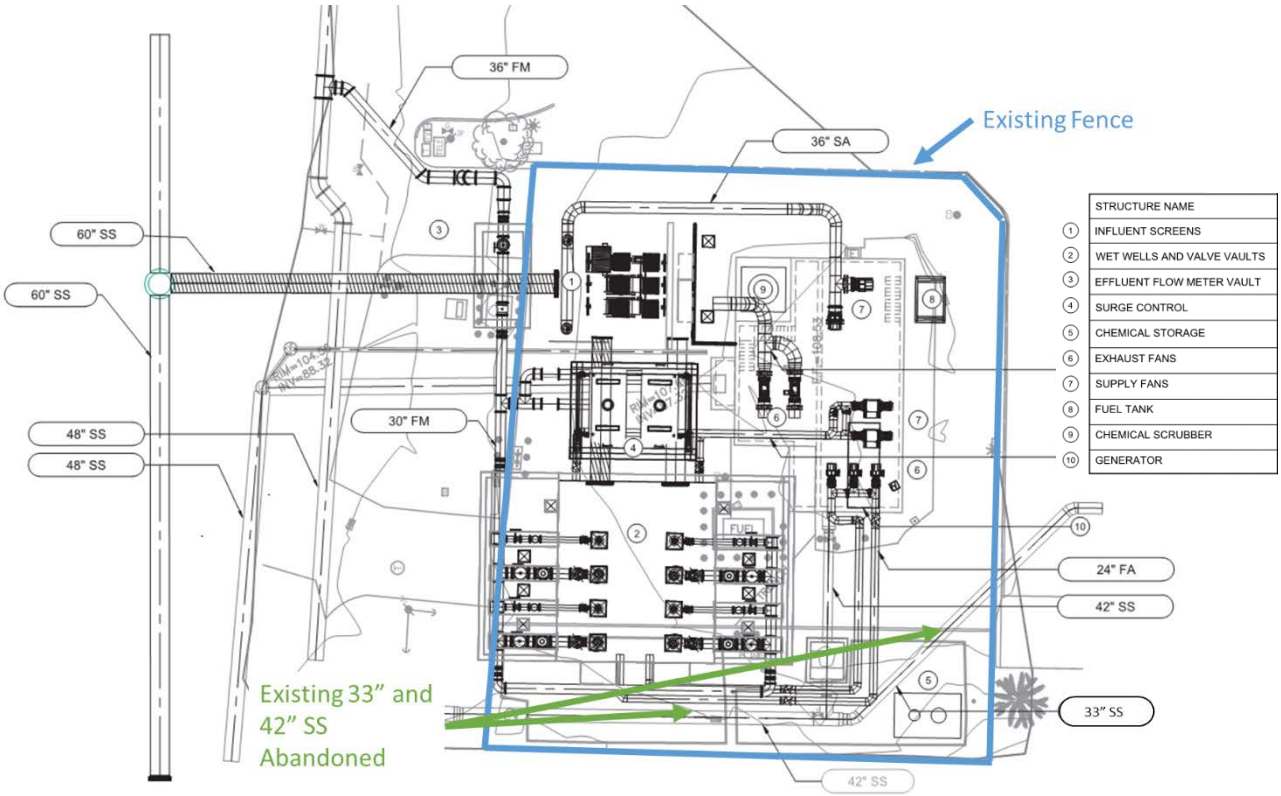

Figure 2-5. New RCPS site layout

Currently between the RCPS and the existing SCPS, is a 2.5-mile, 48-inch force main pipeline. The southern portion of this force main, between the RCPS and the northern end of Inner Bair Island, was built in 2015 to replace the original force main and will be incorporated into the proposed Conveyance System Project. The remaining 0.8 miles of the original 48-inch pipeline, from Inner Bair Island to the SCPS will be replaced by the gravity pipeline project that starts at the north end of Inner Bair Island and terminates at the RLS. The new RCPS will discharge and connect into the 48-inch force main on the north side of the site, as shown in Figure 2-2.

This page intentionally left blank.

Section 3

Compiled Data and Assumptions

This section summarizes the data compiled as of January 2017 and assumptions for the RCPS design, such as flow data, planning parameters and previous studies related to contaminated and hazardous materials survey, geotechnical investigations, corrosivity investigations and noise regulations investigation. Some of the studies discussed below were completed during the original 2014 predesign, prior to the proposed Conveyance System Project, but are still applicable to the RCPS design.

3.1 Flow Data

The existing and future design flows, as of January 25, 2017, are summarized in Table 3-1 in million gallons per day (mgd). The PWWF rates for each Member Agency are based on a single ten-year, 24-hour storm event occurring over the entire service area with a coincident time of concentration for the MPPS and RCPS.

Table 3-1. RCPS design flow rates

Pump Station	Existing			Future (2040)		
	Minimum Flow (mgd)[1]	ADWF (mgd)[2]	PDWF (mgd)[2]	ADWF (mgd)[3]	PDWF (mgd)[4]	PWWF (mgd)[5]
MPPS	N/A[6]	N/A[6]	N/A[6]	N/A[6]	N/A[6]	22
RCPS	0.9	4.5	11.1	8.0	14.5	38
Total	0.9	4.5	11.1	8.0	14.5	60

1. *Minimum dry weather diurnal flow is based on flow data provided by SVCW's Supervisory Control and Data Acquisition (SCADA) output from each pump station provided from October 2015.*
2. *Average Dry Weather Flow (ADWF) for October 2015 is based on flow data provided by SVCW's SCADA output from each pump station.*
3. *ADWF 2040 flow rates are from Table 5-9 of Technical Memorandum (TM) 1 for the Final Plant Capacity Study completed by BC in May 2013.*
4. *Peak Dry Weather Flow (PDWF) 2040 are hourly flow rates and are from the Member Agency Master Plans and CSMP.*
5. *Peak Wet Weather Flow (PWWF) is the worst case timing where the storm event peak flow reaches the entry point into the Conveyance System at the same time. The Master Plans and CSMP show approximately a one-hour difference in the time of concentration within each Member Agency.*
6. *Flows below 14 mgd from MPPS are not shown in Table 3-1 since they are not conveyed through RCPS.*

The design flows range from 0.9 mgd at minimum flow to 60 mgd at the PWWF. The ADWF is approximately 8.0 mgd. When the flows from MPPS exceed approximately 14 mgd, Segment 1 pressures exceed 20 psi when pumping MPPS flows to BIIS. At this flow rate, WBSD flows would be diverted through the new 36-inch tee into the RCPS downstream of the screens. The RCPS pumps will convey the combined flow from Redwood City and Menlo Park to the gravity pipeline BIIS. During dry weather events where Menlo Park flows are less than 14 mgd, the MPPS would pump the flows directly to the 48-inch force main downstream of RCPS. As previously discussed diverting the wet weather MPPS to RCPS allows rehabilitation of Segment 1 pipelines from MPPS to RCPS to be postponed and decreases the size of the pumps required at MPPS. Hydraulic analysis utilizing this flow data is provided in Section 4.

3.2 Project Planning Period

The planning period for the RCPS is 50 years, which is typical for a municipal facility. For further information on the life cycle analysis completed for the RCPS Project, see Section 7.

3.3 Summary of Field Investigations

The following section summarizes field investigations and surveys completed to support the RCPS design.

3.3.1 Contaminated and hazardous materials survey

Field investigations at RCPS were conducted to collect samples to determine the presence of contaminated materials, specifically asbestos, lead, Polychlorinated biphenyl (PCB), and mercury. Additionally, a hazardous materials study was previously conducted to identify potential environmental conditions based on historical and current land uses. A summary of the findings is presented in this section.

3.3.1.1 Contaminated materials survey

The contaminated materials survey included asbestos and lead testing and a hazardous waste visual inspection. A pre-demolition asbestos survey and lead testing for RCPS was conducted on July 26, 2012 by Forensic Analytical, as summarized in TM 3.1 - Field Investigation Summary (BC, 2013a; Appendix A). Asbestos was not found on the RCPS site. However, lead was found in seven out of 11 of the paint samples tested.

A visual inspection of RCPS for suspect PCB-containing waste, universal waste and other hazardous waste was conducted on October 29, 2012 by Forensic Analytical (BC, 2013a). The purpose of the inspection was to identify hazardous materials that may be encountered in the pump station demolition. The items found at RCPS fall within one of three categories: suspect PCB-containing waste, universal waste, and other hazardous waste materials. These items are summarized in Table 3-2.

Table 3-2. Hazardous waste inspection summary for RCPS

Category	Type	Waste Found at Redwood City PS
Suspect PCB-containing waste	Electrical switch gear/transformers (wet type)	Yes
	Fluorescent light fixture ballasts	Yes
Universal waste	Lead acid batteries	Yes
	Light bulbs/tubes	Yes
	Miscellaneous chemicals and cleaning supplies	Yes
Other hazardous waste	Various oils	Yes
	Oily rags	Yes
	Diesel fuel	Yes
	Generator (oil, fuel, coolant)	Yes
	Sodium hypochlorite	Yes
	Bio hazard waste	No

Based on the materials found and their locations, the following are recommendations for handling the asbestos, lead, and PCBs at RCPS, according to local, state, and federal safety standards:

- **Asbestos materials.** Remove prior to demolition by licensed asbestos abatement contractor. Consult Certified Asbestos Consultant to assist with project design and monitoring, including clearance inspection and air sampling after asbestos removal. If any additional suspect asbestos-containing material is discovered during the renovation, the work should stop, and the material should be tested.
- **Lead materials.** Work performed on surfaces containing any amount of lead must comply with the California Division of Occupational Safety and Health (Cal/OSHA) Lead in Construction Safety Standard (8 CCR 1532.1). Remove lead paint at spots scheduled for disturbance by the construction to eliminate the Cal/OSHA trigger task and worker protection and monitoring requirements. Otherwise, utilize Cal/OSHA standards for working around lead. Remove areas of lead containing paint where the paint is peeling or deteriorated prior to sending components for recycling or disposal and prior to demolition. The paint chips are likely classified as hazardous waste and will contaminate any waste at the site with which they are combined. Paint chips and other waste generated from paint removal as well as painted components destined for disposal, should be tested for lead. If the lead content is determined to be hazardous according to the applicable federal and state regulations, the paint should be removed accordingly.
- **PCBs.** Sample the materials after energy isolation or otherwise assume that they contain PCBs. Remove suspect PCB-containing waste according to state, federal and local requirements.

All regulated and hazardous waste items encountered should be properly packaged, labeled, transported and disposed of or recycled in accordance with all applicable federal, state and local regulations.

3.3.1.2 Hazardous materials study

A hazardous materials study was conducted for the MPPS site as part of the Phase I Environmental Site Assessment report, completed by Cornerstone Earth Group in May 2016, as included in the Draft EIR. The purpose of the study was to identify potential environmental conditions at the RCPS site that could include the presence or likely presence of hazardous substances or petroleum products on a property under conditions that indicate an existing release, past release, or a material threat of a release of these substances or products into structures on the property or into the ground, ground water, or surface water on the property. The study results provide information that can be used in final design to account for removal and disposal of hazardous substances or petroleum products in the construction bid documents and cost estimates.

Based on the study, a former leaking underground storage tank (LUST) was located on the property; however, the tank was removed in 1994 (Cornerstone Earth Group, 2016). Also, a sodium hypochlorite spill and a sewage spill were previously reported. According to the Phase I Environmental Site Assessment Report, the potential impacts of the LUST and spills on the RCPS construction is low. However, the report states that any excavation near the locations of these sites may still contain some residual contaminants. Therefore, appropriate measures for handling and disposal should be used if these contaminants are encountered.

3.3.2 Geotechnical investigation

As part of previous geotechnical investigations, Jacob Associates drilled a single boring at the RCPS site to a depth of 50 ft in June 2012 (Jacobs Associates, 2013; Appendix B). Moisture content, unit weight, Atterberg limits, grain size analysis, hydrometer with sieve analysis, unconfined compression, direct shear tests, consolidation, and corrosion tests were performed on soil samples retrieved from

the test borings to evaluate their physical characteristics and engineering properties. In addition to the test boring, Jacobs reviewed historical geotechnical investigations on the RCPS Project site.

A Pre-Design Geotechnical Interpretive Report (GIR) was also completed by DCM Consulting, Inc. using the test boring data provided by Jacob Associates (DCM Consulting, Inc., 2013; Appendix C). The conclusions and recommendations from the GIR are further discussed in Section 5 as part of the design considerations for final design.

3.3.3 Corrosivity investigation

A soil corrosivity investigation (V&A Consulting Engineers, Inc., 2014; Appendix D) was performed at RCPS by BC's subconsultant, V&A Consulting Engineers, Inc. (V&A). The investigation included field soil resistivity testing, reviewing existing corrosion data, performing chemical analyses of selected soil samples, and recommending corrosion control methods for buried yard piping and concrete structures. The results of the corrosivity investigation and recommendations state the soil resistivity at a depth of five to 20 feet ranges from 109 ohm-cm to 1,607 ohm-cm. The saturated soil resistivity of the sample was 1,200 ohm-cm. These soils are considered moderately corrosive to very highly corrosive to metal piping. Corrosion control measures are further discussed in Section 5.

3.3.4 Noise survey and regulations

A noise and vibration assessment was completed in November 2016 by Illingworth & Rodkin, Inc. as part of the Draft EIR (SVCW, 2016). The following section summarizes the results of their survey.

The Redwood City Noise Ordinance is contained in the Municipal Code Chapter 42 "NOISE REGULATION" and establishes allowable hours of construction and noise limitations. The following are deemed to be excessive and unreasonable noises:

- Noise levels generated by construction activities, including demolition, alteration, repair or remodeling of or to existing structures and construction of new structures on property within the City, at more than 110 decibels (dB) measured at any point within a residential district of the City and outside of the plane of said property.
- Noise levels generated by an individual item of machinery, equipment or device used during construction activities at more than 110 dB measured within a residential district of the City at a distance of twenty-five feet (25') from said machinery, equipment or device. This includes demolition, alteration, repair or remodeling of or to existing structures and construction of new structures on property within the City, If said machinery, equipment or device is housed within a structure on the property, then the measurement shall be made at a distance as near to twenty-five feet (25') from said machinery, equipment or device as possible.
- The adjacent land uses include the Redwood City police station, which is approximately 55 feet east of the RCPS; the Maple Street Shelter, which is approximately 170 feet northwest of the pump station; and the San Mateo County Women's Jail, which is located approximately 270 feet northwest of the pump station. To the south of the pump station is US-101. Noise levels were measured in the vicinity of the RCPS. The average noise level during daytime hours at the shelter was 56 dBA L_{eq}. Average nighttime noise levels along US-101 in this area are about 10 dBA lower than daytime levels. It is assumed that the noise increase from existing levels would be less than 5 dBA, which would constitute a less-than-significant increase. Since all improvements at RCPS would be within the building, the RCPS Project improvements are not expected to result in a measurable contribution to the overall noise, which is dominated primarily by traffic along US-101.

The pump station would be constructed over a 24-month period. Tie-ins and the last part of construction would need to be done during low-flow conditions (i.e., generally April to October).

Construction activities would occur between the hours of 7:00 a.m. and 6:00 p.m. on weekdays, with the exception of some work, such as electrical switchovers and piping connections completed at night during low flow periods.

The maximum worst case day for construction at RCPS is anticipated to be during major excavation efforts and during large concrete pours due to the large presence of equipment and vehicles onsite. No night time work is anticipated, except for special conditions listed above, but some weekend work may be needed to complete installation of key components.

The Redwood City noise ordinance does not include noise limits that regulate noise from mechanical equipment. However, based on the ambient noise surveys conducted in 2012, 2013, 2014, and 2016 (SVCW, 2016), the calculated operational noise from the proposed improvements would be at or below ambient noise levels.

This page intentionally left blank.

Section 4

Project Specific Analyses

This section discusses the alternatives analysis, site evaluation, and hydraulic analysis conducted for the RCPS.

4.1 Alternatives Analysis and Refinement

SVCW completed the CSMP in August 2011 to plan and program the projects required for improving its Conveyance System. Chapter 7 of the CSMP developed conceptual-level requirements for replacing and rehabilitating the SVCW pump stations that served as the baseline for developing the original RCPS predesign.

The CSMP evaluated pump station types and standard design features for the RCPS. The evaluation consisted of a comprehensive survey of current wastewater industry practices and lessoned learned with a review of literature provided by wastewater industry associations and professionals.

The standard CSMP pump station design features included the following:

- Two sets of submersible pumps with variable frequency drives (VFDs) to accommodate the dry weather and wet weather flow range
- Dual self-cleaning trench style wet wells to allow one wet well to be taken out of service during dry weather
- Automated bar screen upstream of pumps to remove large debris
- Corrosion control including wet well lining of exposed surface to the wastewater and adequate ventilation
- Security for the site and buildings
- Surge control to protect the force main
- Sound attenuation that meets local noise requirements
- Standby power with diesel fuel storage

The CSMP provided conceptual-level guidance on a number of requirements for the pump stations. The CSMP also identified a number of items that require further refinement. A summary of the refinements that BC is recommending, for the proposed Conveyance System Project that differs from the CSMP, is provided below:

- **Pump selection.** The CSMP recommended uniform or same-size pumps for each individual pump station, but also recommended that the predesign phase evaluate in more detail the use of multiple pump sizes at each pump station. BC recommends that both dry weather and wet weather pumps, using two different sized pumps, be provided to accommodate the range of flows.
- **Grinding/screening**. The CSMP recommended grinders upstream of each wet well. Grinders will not be provided. RCPS will include bar screens to remove debris greater than 0.75-inch. The dry weather pumps will also be grinder or chopper pumps.
- **Wet well approach conditions.** Within the CSMP, grinder vaults were located adjacent to the wet well with minimal distance of straight pipe separation. BC recommends that a minimum

separation of five to ten pipe diameters between the screening structure and the junction structures be provided.

- **Wet well and pump configuration.** The CSMP recommended a pump station configuration assuming the same sized pumps in dual wet wells prior to selection of the proposed Conveyance System Project. BC recommends dual wet wells with a pump configuration of dry weather pump, wet weather pump, dry weather pump, and wet weather pump be provided. The configuration is further discussed in Section 5.
- **Wet well operation.** The CSMP recommended that an automated self-cleaning cycle be evaluated. BC recommends that the cleaning cycle be manual such that the operator can adjust the flow and velocities to maximize cleaning potential.
- **Equipment (pump) removal.** The CSMP recommended hatches be provided directly above each pump for installation and removal. BC also recommends that submersible pump removal be accomplished by a movable gantry crane through these hatches.
- **Pump monitoring and control.** Pump monitoring and control will conform to SVCW's Automation Standards and provide monitoring and control to support a single ten-hour shift, seven days a week. The remote pump station will typically be unmanned 24 hours per day 7 days a week except for the necessary maintenance activities.
- **Hydraulic transient (surge) control.** The CSMP recommended a combination of pressurized surge tanks and sewage vacuum relief valves on each tank and the force main. Hydraulic transient analyses will need to be performed to finalize the surge control design.
- **Standby power.** Standby power will be provided at each pump station and housed within the existing RCPS building.
- **Site access.** Site access and turn around requirements will be coordinated with SVCW, local agencies and cities, the fire marshal and local businesses.

Further design details are provided in Section 5.

4.2 Siting evaluation

The selection of the proposed Conveyance System Project did not affect the RCPS location. Therefore, no further analyses were completed to modify the new RCPS's site.

4.3 Hydraulic Analysis

BC modeled the SVCW conveyance system using InfoWater V10.0 by Innovyze, Inc. (InfoWater) both during the predesign in 2014 and after the selection of the proposed Conveyance System Project in 2015. InfoWater is a commercially available hydraulic analysis program that calculates and tracks various hydraulic elements such as flow, velocity and pressure of a fluid through a pipe network.

During predesign, the model was used to develop hydraulic grade lines for the force main, determine the maximum operating pressure in the force main at key locations, develop system curves for pump selection and determine storage requirements. The model is built as a dynamic model, and can analyze the complex hydraulics of multiple pump stations simultaneously discharging into a single force main. Details on the hydraulic analysis from the original predesign are presented in TM 6.1 – Hydraulic Evaluation (BC, 2013), though it should be noted that these analyses discussed in TM 6.1 assume the entire conveyance system would consist of a force main. Model runs completed for the original Conveyance System Predesign included combinations of the following elements:

- **Force mains.** The existing force mains will be replaced in stages, which results in existing force mains and new force mains operating in conjunction with the new pump stations. The existing force mains are limited to a pressure of approximately 20 psi.
- **Existing booster stations**. The existing force main pressure limitations require that the WWTP ILS remain in service until all the new force mains are installed.
- **Headworks**. The new pump stations will need to operate with the existing inlet structure and Headworks at the SVCW WWTP. The new Headworks will have a hydraulic grade approximately 6 feet higher than the existing inlet structure with an assumed water surface elevation of 106 ft National Geodetic Vertical Datum 1929 (NGVD29) + 100 ft.

After selection of the proposed Conveyance System Project, the model was revised to account for the proposed gravity pipeline and other changes to the conveyance system. The recommendations discussed in this Project Planning Report are for the new RCPS under the proposed Conveyance System Project. Results of the proposed Conveyance System Project hydraulic analyses are discussed further in Section 4.3.1.

4.3.1 RCPS operations

As discussed in Section 2.3, operational changes are proposed at the RCPS and MPPS. For dry weather flows, the MPPS will pump directly to the gravity pipeline BIIS. During wet weather flows, for reasons described earlier, the MPPS will pump to the RCPS, where the flows will be re-pumped by the RCPS to the BIIS.

As part of the update to the hydraulic model following selection of the proposed Conveyance System Project, BC modeled the PWWF in Segments 1 and 2 of the conveyance system force main (see Figure 2-4). The first scenario evaluated single pumping, i.e. the MPPS pumps wet weather flows from the WBSD directly to the gravity tunnel Bair Island inlet structure. Results from the hydraulic model are presented in Figure 4-1.

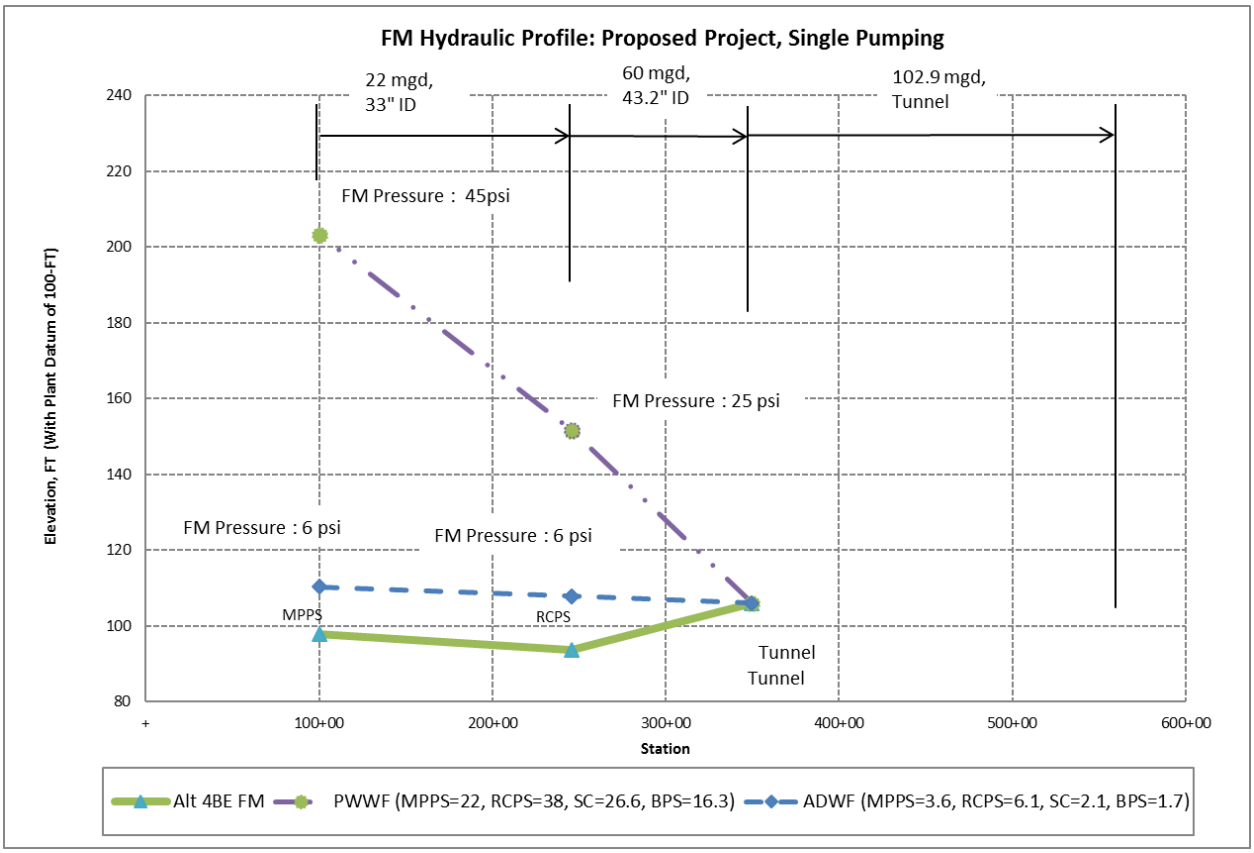

Figure 4-1. Conveyance system hydraulic profile, PWWF, single pumping

Notes:

- *The Alt 4BE FM line represents the elevation of the force main between the MPPS, RCPS and BIIS under the proposed Conveyance System Project. The diameter of the force main for each segment is displayed above the hydraulic profile.*
- *The flow rates included on the top of the hydraulic profile are the PWWF for each segment of force main/gravity tunnel.*
- *PWWF line represents the hydraulic grade during PWWF, i.e. the maximum expected hydraulic grade in the force main between the MPPS and RCPS and the RCPS and BIIS/gravity tunnel.*
- *The ADWF line represents the hydraulic grade during ADWF, i.e. the hydraulic grade expected under normal operating conditions in the force main between the MPPS and RCPS and the RCPS and BIIS/gravity tunnel.*
- *The pressure in the force main during PWWF and ADWF is equal to the hydraulic grade minus the elevation of the force main divided by 2.31 psi/ft.*

Under this scenario, pressure at the discharge side of MPPS is 45 psi. Pressure in Segment 1 of the force main exceeds 20 psi for the entirety of the alignment. Based on early discussions with SVCW, the upper pressure limit of Segment 1 was 20 psi to maintain safe operating pressures and prevent damage to the force main. Without rehabilitation, Segment 1 cannot maintain pressures at this level.

BC also modeled a pumping scenario in which wet weather flows from the WBSD are pumped to the RCPS, combined with Redwood City flows, then pumped to the BIIS. Results of re-pumping WBSD flows at RCPS during wet weather events are presented in Figure 4-2.

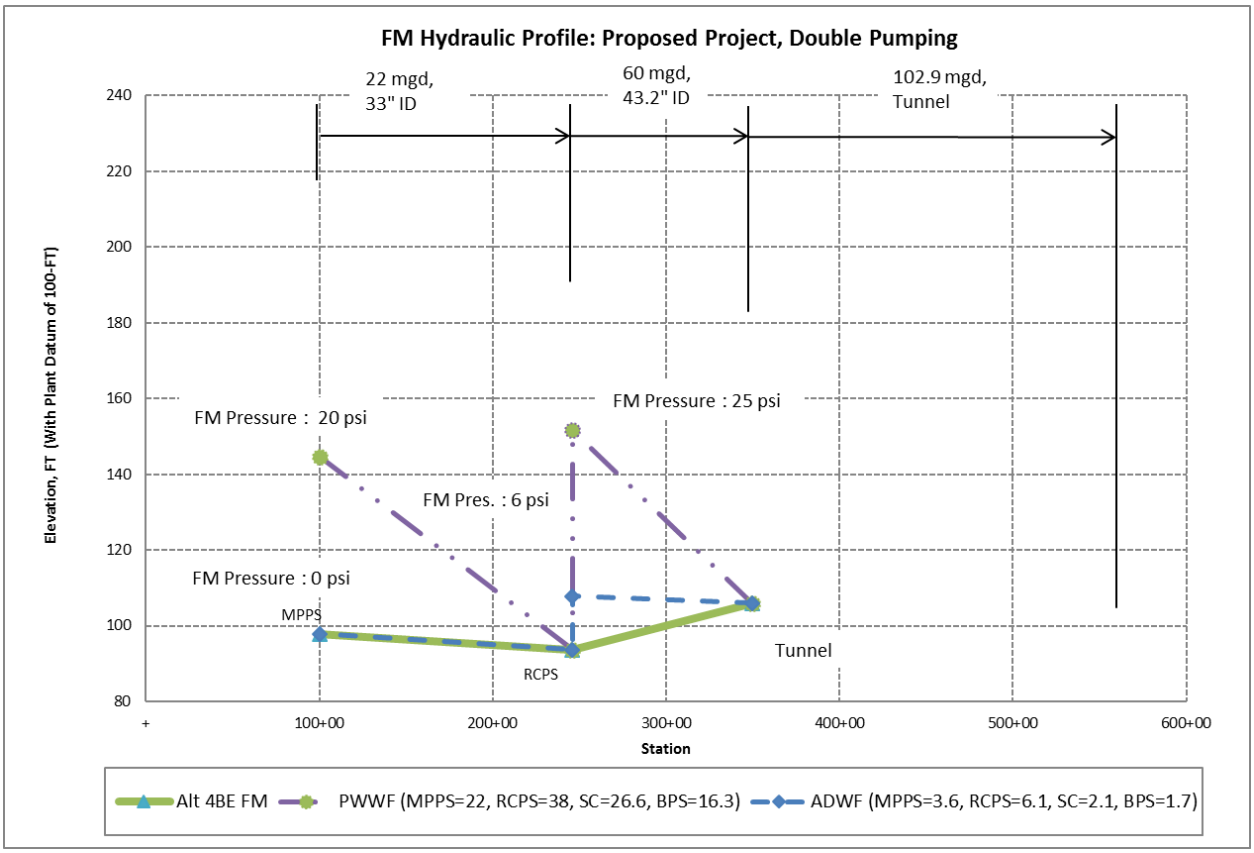

Figure 4-2. Conveyance system hydraulic profile, PWWF, double pumping

Notes:

- *The Alt 4BE FM line represents the elevation of the force main between the MPPS, RCPS and BIIS under the proposed Conveyance System Project. The diameter of the force main for each segment is displayed above the hydraulic profile.*
- *The flow rates included on the top of the hydraulic profile are the PWWF for each segment of force main/gravity tunnel.*
- *PWWF line represents the hydraulic grade during PWWF, i.e. the maximum expected hydraulic grade in the force main between the MPPS and RCPS and the RCPS and BIIS/gravity tunnel.*
- *The ADWF line represents the hydraulic grade during ADWF, i.e. the hydraulic grade expected under normal operating conditions in the force main between the MPPS and RCPS and the RCPS and BIIS/gravity tunnel.*
- *The pressure in the force main during PWWF and ADWF is equal to the hydraulic grade minus the elevation of the force main divided by 2.31 psi/ft.*

By utilizing the RCPS to re-pump wet weather flows from the WBSD to the BIIS, pressure in Segment 1 remains below 20 psi, which is within permissible operational ranges for the force main. At a wet weather flow of approximately 14 mgd, the pressure within Segment 1 starts to exceed the pressure limit of 20 psi if pumped from MPPS to the BIIS. Therefore, to limit Segment 1 pressures to 20 psi, flows will be diverted to RCPS using control valves. Pumping of WBSD flows at RCPS to the BIIS is required if Segment 1 is not rehabilitated. For dry weather flows, MPPS does not need to be diverted to RCPS. Segment 1 pressure limitations and associated flow rate will be finalized during subsequent design.

4.3.2 Pump selection

Following selection of the proposed Conveyance System Project, the hydraulic model was revised and used to develop system curves for pump selection. The range of flow and system pressure between minimum and PWWF is large; therefore, the pump stations will be equipped with separate

dry weather and wet weather pumps alternately placed together in new, dual wet wells. In addition to needing to pump both dry weather and wet weather flow from Redwood City, the RCPS needs to pump wet weather flow from the MPPS. Table 3-1 shows the range of flow that the RCPS needs to pump is 0.9 mgd to 60 mgd. This significantly extreme range of flow requires two sets of pumps. One set of pumps for the dry weather flow and one set of pumps for the wet weather flow. Figure 4-3 and Figure 4-4 show the dry weather and wet weather hydraulic analysis and pump selection. Table 4-1 summarizes the results of the pump selection analysis.

Table 4-1. Summary of RCPS pump selection and hydraulic conditions for the proposed Conveyance System Project

Pump	Predesign Pump Model Selection	Pump Size and HP	PDWF[1]/ PWWF	MDWF[2]	Peak Flow per Pump	Head at PDWF	Pressure[3]
Dry Weather Pumps	Vaughan submersible chopper pump, Model SE10R	Four 16-inch Impeller, 50-HP Pumps	14.5 mgd	0.9 mgd	4.8 mgd	34 feet	21 psi
Wet Weather Pumps	Flygt Model C3531 submersible pumps	Four 27- inch Impeller, 400-HP Pumps	60.0 mgd	N/A	12.7 mgd	77 feet	33 psi

1. *Peak Dry Weather Flow (PDWF) and Peak Wet Weather Flow (PWWF) 2040 are hourly flow rates and are from the Member Agency Master Plans and CSMP.*
2. *Minimum Dry Weather Flow (MDWF) current are hourly flow rates.*
3. *This is the pressure observed at the pump, the pressure in the force main will be slightly less with the difference being static head between the wet well water surface and the force main elevation.*

Pump selection should be based on a range of operating conditions that the pump will frequently experience and not on a single, worst case point. The operating conditions for pump selection shall fall within the Preferred Operating Range (POR) of the pumps as shown in the shaded regions within Figures 4-3 and 4-4. At a minimum, the ADWF, PDWF and PWWF shall be located within the POR. The POR for one pump, two pumps and three pumps in operation are shown in Figures 4-3 and 4-4 in red, green and purple shaded regions, respectively.

4.4 Hydraulic Transient Analysis

A hydraulic transient analysis was completed in 2014 based on the refined wastewater flows and on the conveyance system consisting entirely of force main. Following selection of the proposed Conveyance System Project and incorporation of gravity flow from the BIIS to the WWTP, a new hydraulic transient analysis was not completed and will be required during subsequent design of the proposed Conveyance System Project.

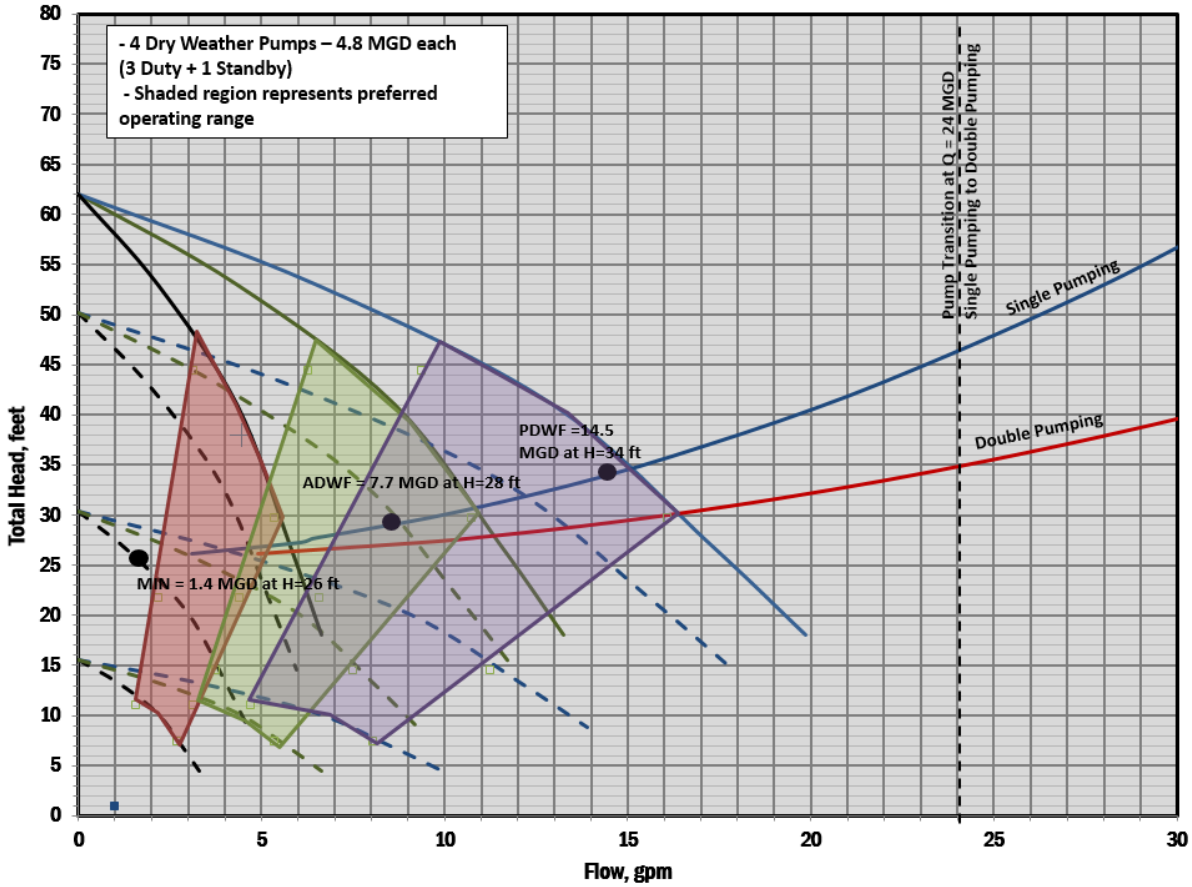

Figure 4-3. RCPS system and pump curves - dry weather

Notes:

- *Figure represents the four dry weather operational pumps at the MPPS (three duty, one standby).*
- *The solid lines represent the pumps operating at 100% capacity, the blue line is 3 pumps, green is 2 pumps, and black is one pump.*
- *Dashed lines represent the pumps operating at reduced speeds, 90 percent, 70 percent, and 50 percent, respectively.*
- *The shaded areas in the figure above depict the Preferred Operating Ranges (POR) for one pump, two pumps, and three pump in red, green, and purple, respectively. Operation within the pump's POR under normal operation conditions will extend the life of the pumps.*

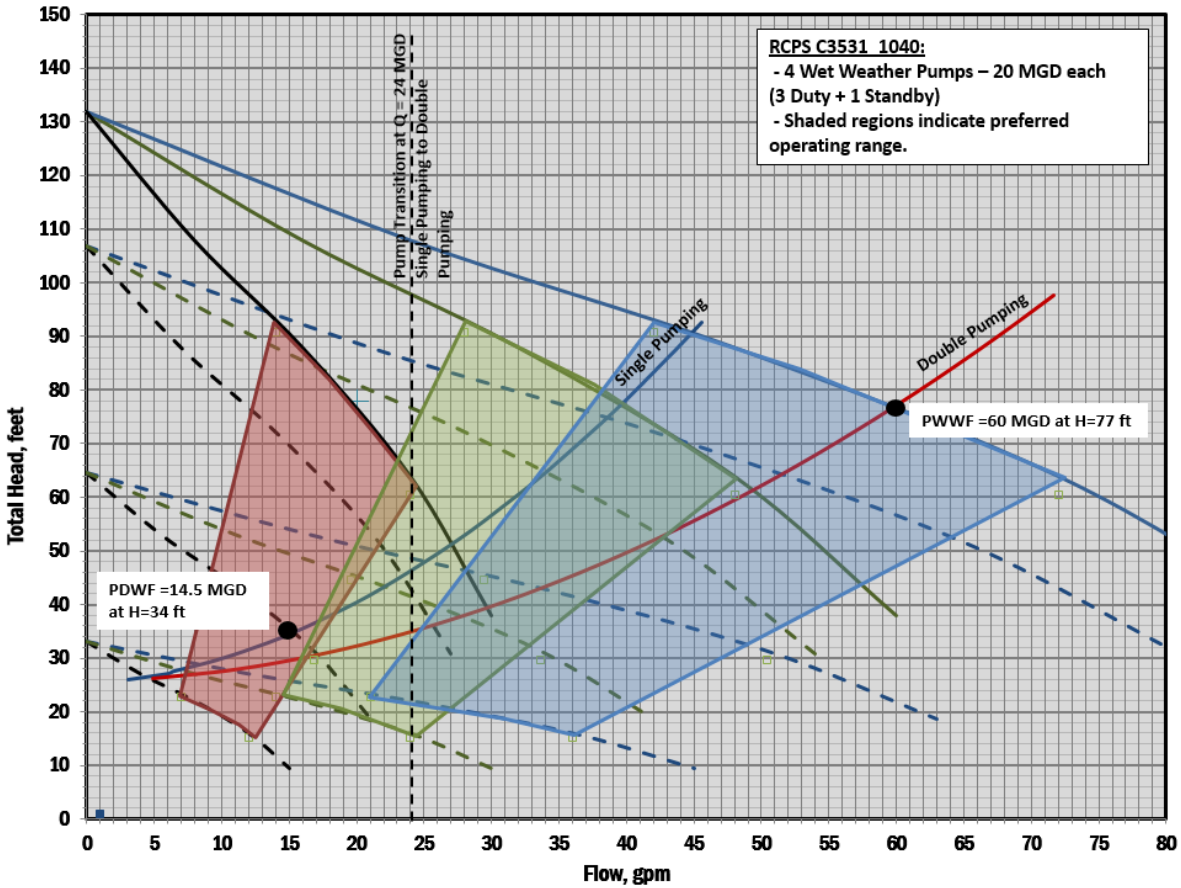

Figure 4-4. RCPS system and pump curves - wet weather

Notes:

- *Figure represents the four wet weather operational pumps at the MPPS (three duty, one standby).*
- *The solid lines represent the pumps operating at 100% capacity, the blue line is 3 pumps, green is 2 pumps, and black is one pump.*
- *Dashed lines represent the pumps operating at reduced speeds, 90 percent, 70 percent, and 50 percent, respectively.*
- *The shaded areas in the figure above depict the Preferred Operating Ranges (POR) for one pump, two pumps, and three pump in red, green, and purple, respectively. Operation within the pump's POR under normal operation conditions will extend the life of the pumps.*

Section 5

Selected Project Description

This section provides an overview of the RCPS Project and describes the pump station design elements of the recommended RCPS Project alternative. Criteria and guidelines for updating these elements during detailed, final design are summarized below. Detailed design criteria are further discussed in TM 8.1 – Design Criteria, Guidelines, and Standards (BC, 2015; Appendix E), hereinafter referred to as TM 8.1. It is important to note that TM 8.1 was written during predesign of the 2014 force main conveyance system; therefore, some design criteria will need to be refined as part of the proposed Conveyance System Project subsequent design. A summary of the changes that occurred from predesign to the proposed Conveyance System Project conceptual design as it relates to TM 8.1 is provided in Appendix E.

5.1 Project Overview

Currently, the RCPS requires frequent hands-on maintenance, and there are several ongoing operational challenges with the pump station in its current configuration. Additionally, the existing equipment is at or near the end of its useful life.

The proposed RCPS Project includes major upgrades and improvements to maintain long-term operation of the pump station and conveyance system. The existing RCPS building would remain on site and be repurposed to house new electrical equipment, standby power generator and other ancillary items needed for the long-term operation of the new pump station. A new pump station structure would be constructed adjacent and to the west of the existing RCPS building.

Table 5-1 summarizes the major equipment included in the proposed RCPS. The equipment list and sizes are subject to change as the design is refined.

There will also be some modifications to the hydraulics and operation of the RCPS. These changes are discussed in Section 5.5.6The expected useful life of the RCPS Project is 50 years. Design criteria and considerations for major RCPS Project components are discussed in Section 5.3.

Table 5-1. RCPS major equipment

Description	Facility Needs/Quantity
Screening Building	
Mechanical Bar Screens (19 mgd capacity)	2
Washer Compactor (10 HP)	1
Wet Wells	
Dry Weather Submersible Pumps (50 HP)	4
Wet Weather Submersible Pumps (400 HP)	4
Flow Meter Vault	
Magnetic Flow Meter (30” Inner Diameter)	1
Composite Sampler	1
Odor Control	

Table 5-1. RCPS major equipment	
Description	Facility Needs/Quantity
Supply Fans (1 HP)	2
Supply Fans (3 HP)	4
Exhaust Fans (3 HP)	3
Exhuast Fans (7.5 HP)	2
Chemical Scrubber (20 ft diameter)	1
Caustic Soda Storage Tank (615 gallons)	1
Hypochlorite Storage Tank (2750 gallons)	1
Standby Power System	
Diesel Fuel Storage Tank (5,200 gallons)	1
Diesel Fuel Transfer Pump (0.5 HP)	1
Diesel Fuel Day Tank (150 gallons)	1
Standby Generator (2,500 kW)	1
Surge Control	
Air Compressor (10 HP)	2
Hydropneumatic Tank (9,000 gallons)	2

5.2 Site Layout

The proposed pump station will be located on the same property as the existing pump station. Figure 5-1 presents a site layout including site access locations. Figure 5-1 presents an improvement schematic, which includes the following major components:

- Screening building
- Surge tanks
- Wet wells (2) with wet and dry weather pumps
- Electrical and odor control systems in existing RCPS building

Preliminary design documents for the new RCPS were developed previously and stopped in draft form in January 2015. These drawings are included as Appendix F of this report. It is important to note that the drawings do not reflect all the changes that occurred resulting from the selection of the proposed Conveyance System Project. The proposed RCPS Project will maintain the equipment shown in Table 5-1 and general configuration displayed in the drawings in Appendix F; however, the sizes of the equipment and additional equipment may be identified as the design is refined that differ than those shown on the drawings. For example, the wet weather pump sizes are significantly reduced with the gravity pipeline as part of the proposed Conveyance System Project. Therefore, the sizes of the pumps requiring updating.

Design criteria and considerations for major RCPS Project components are discussed in the following sections. The modifications proposed for the RCPS are for a new pump station on the existing pump station site.

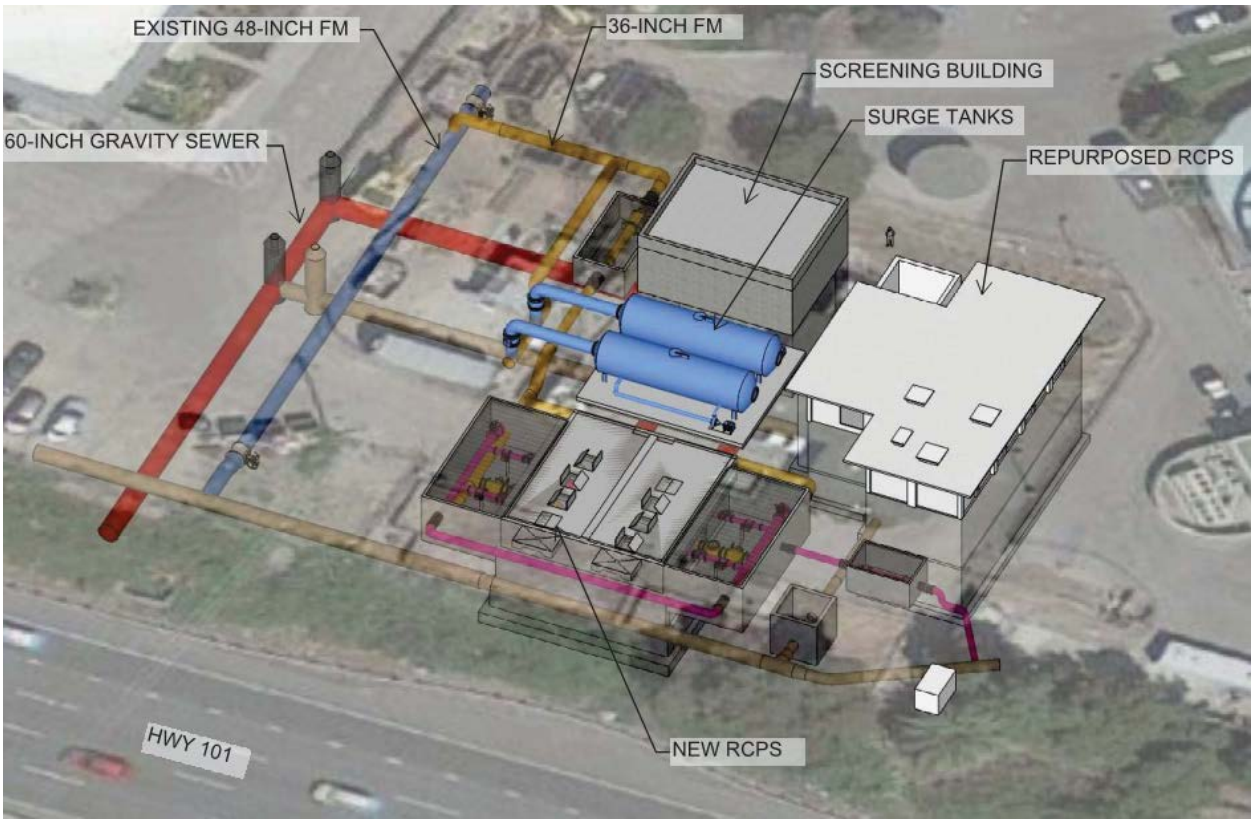

Figure 5-1. RCPS improvement concept

5.3 Pump Station Design Criteria

The following section discusses the design criteria for the RCPS equipment and design components.

5.3.1 Composite sampling

A single composite wastewater sampler will be located in the influent screen afterbay. The sampler will consist of a complete assembly consisting of the sampling equipment, a refrigerator, a signal interface converter, signal and power wiring, appurtenances, and controls. The sampler will be capable of collecting sequential and composite samples at equal flow volume intervals measured by an external flow meter (flow pacing) or at timed intervals (time pacing).

5.3.2 Screening system

The proposed screening system, shown in Figure 5-2, will remove the large volume of rags contributed by jail facilities located upstream of the RCPS.

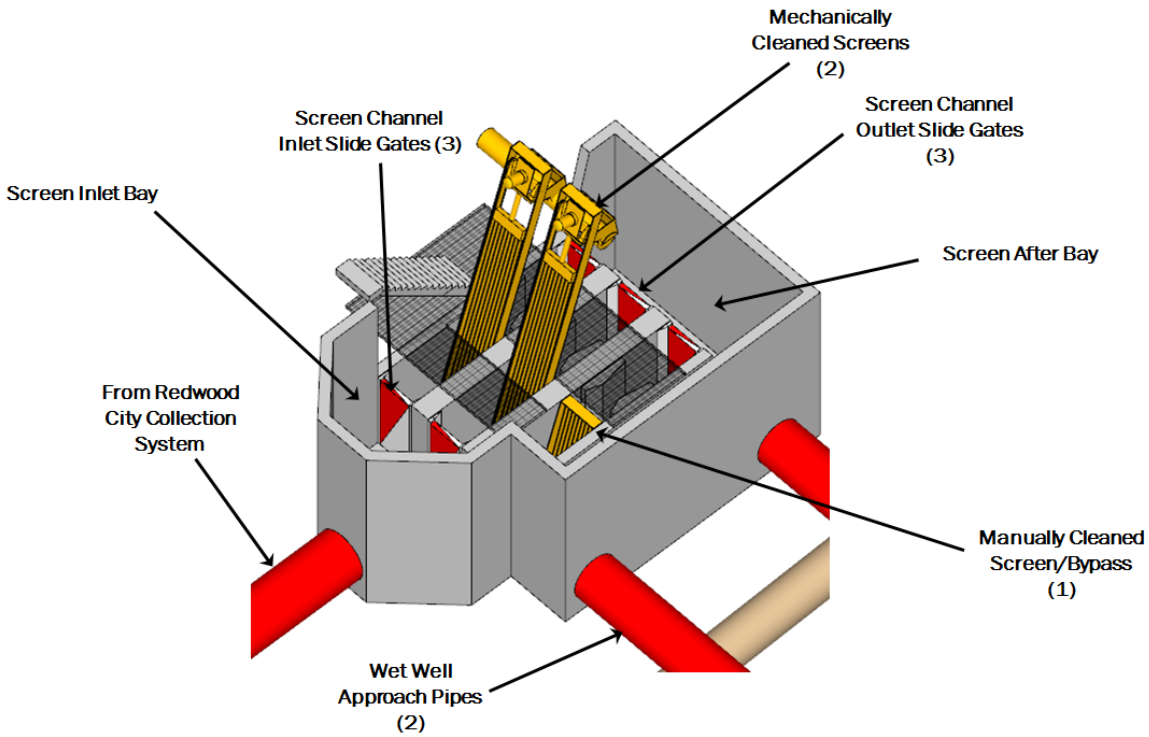

Figure 5-2. RCPS screening configuration

5.3.2.1 Inlet bay

A 60-inch influent sewer from the Redwood City collection system flows into the RCPS screening's building inlet bay. A stainless steel slide gate (not pictured) is recommended at the inlet to the screening building to isolate the screening system from the influent sewer if needed. Isolation of the screening system from the influent sewer will be coordinated with Redwood City to ensure adequate storage is available to back up the collection system or bypass measures can be implemented. Operation of the gate will be further discussed with SVCW Engineering and operations and maintenance (O&M) staff as part of subsequent design. The gate will be electrically actuated and automated.

5.3.2.2 Screens

The inlet bay leads to three channels with one bar screen per channel. There are two mechanically cleaned bar screens (MCBS) and one manually cleaned bar screen. The location of the manually cleaned bar screen is currently being decided by SVCW's operations group. The screens will operate in parallel to provide multiple pathways for flow during maintenance or under PWWF conditions. During PWWF flow conditions, two screens will be in operation. The MCBS will be front-cleaned by multiple rake bars bolted at selected distances to a pair of drive chains. Each MCBS will consist of a frame, bar rack, deadplate, chain drive assembly, multiple rake bars, discharge chute, gear reducer, motor, mounting brackets, local control panel, and all necessary appurtenances to provide a complete mechanical screening removal system. The rake bars will transport the material up and out of the sewage flow, across a deadplate and discharge to a sluicing channel that empties into a single washer/compactor.

SVCW has indicated that they want to explore the possibility of designing the channels and screens to each handle the full PWWF or 38 mgd. The design of the RCPS needs to include an evaluation of the channel and screen sizing to accommodate half or all of the PWWF.

In the event that both MCBS are out of operation or one MCBS is out of service during a PWWF event, flow may be automatically bypassed to the manually cleaned bar screen channel. The channel and MCBS were previously sized to handle half of the PWWF, but sizing of this channel is subject to the MCBS sizing during design of the RCPS.

Screen bars will be a minimum of 0.25 inches thick and spaced at 0.75 inches apart. The approach velocity in the screen channel should be a minimum of 1.25 feet per second (ft/s) during minimum flow for at least one hour of the day to minimize solids deposition in the channel. The maximum slot velocity (through the screens) should not exceed 3.0 ft/s during PWWF. The maximum upstream water depth will be based on maintaining normal flow in the incoming sewer line to prevent collection system backwatering.

5.3.2.3 Cutthroat flume

A cutthroat flume will be installed in each screen channel following the bar screens to regulate the water level and flow velocity in the screening channels. The flume will be designed for free flow conditions during all flow conditions.

5.3.2.4 Washer/compactor

Screened material will be discharged into a sluicing channel directed into a single washer compactor. After the screenings are washed and compacted, they will be conveyed to a rolling trash bin for disposal. The estimated volumes of screenings are approximately 5 ft^3/MG to 8.5 ft^3/MG for screen bar spacing of 0.75 inches (WEF, 2012). At ADWF, this results in a maximum screenings volume of 59 ft^3/day.

5.3.3 Wet well design and pump selection

The RCPS will consist of approach pipes, two trench-style wet wells, dry weather and wet weather pumps, pump removal system, discharge piping, and valve vaults (see Figure 5-3). These components are described below. Figure 5-4 presents a section view of a typical trench-style wet well showing the self-cleaning process.

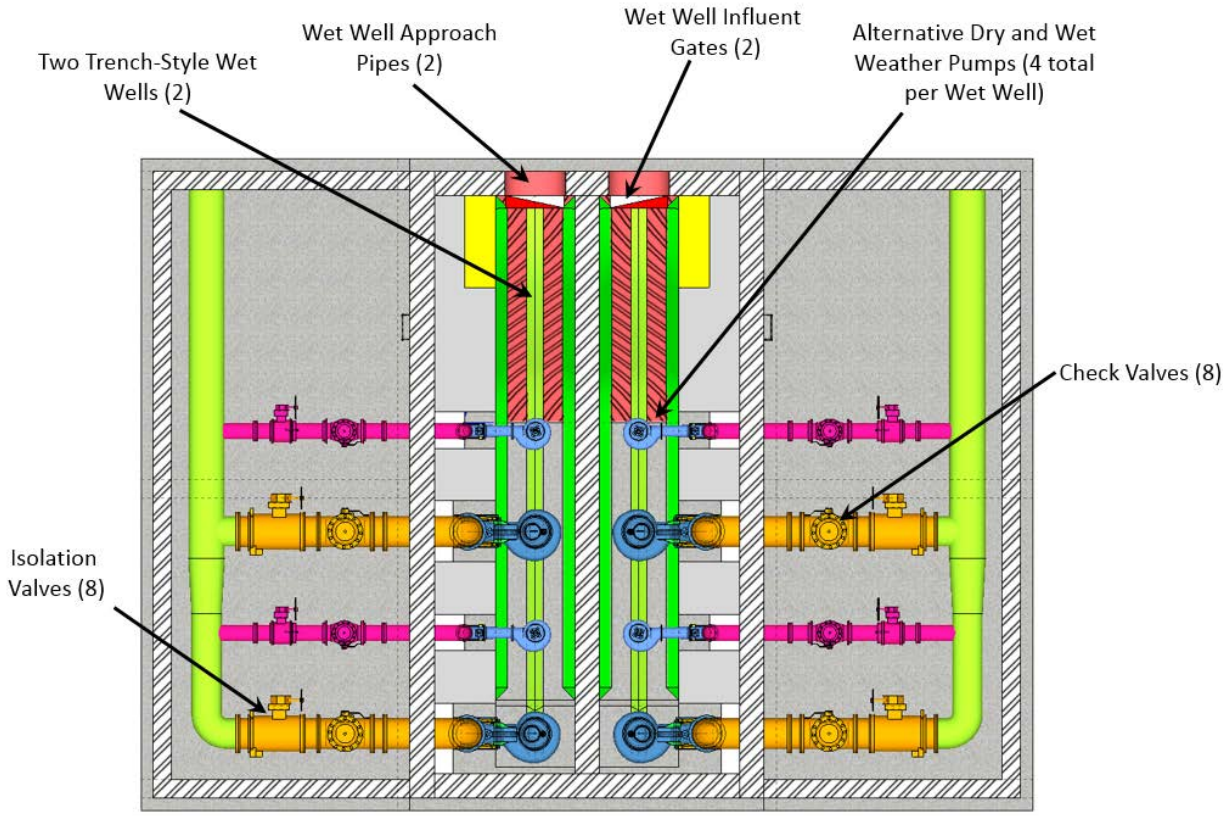

Figure 5-3. Typical wet well configuration

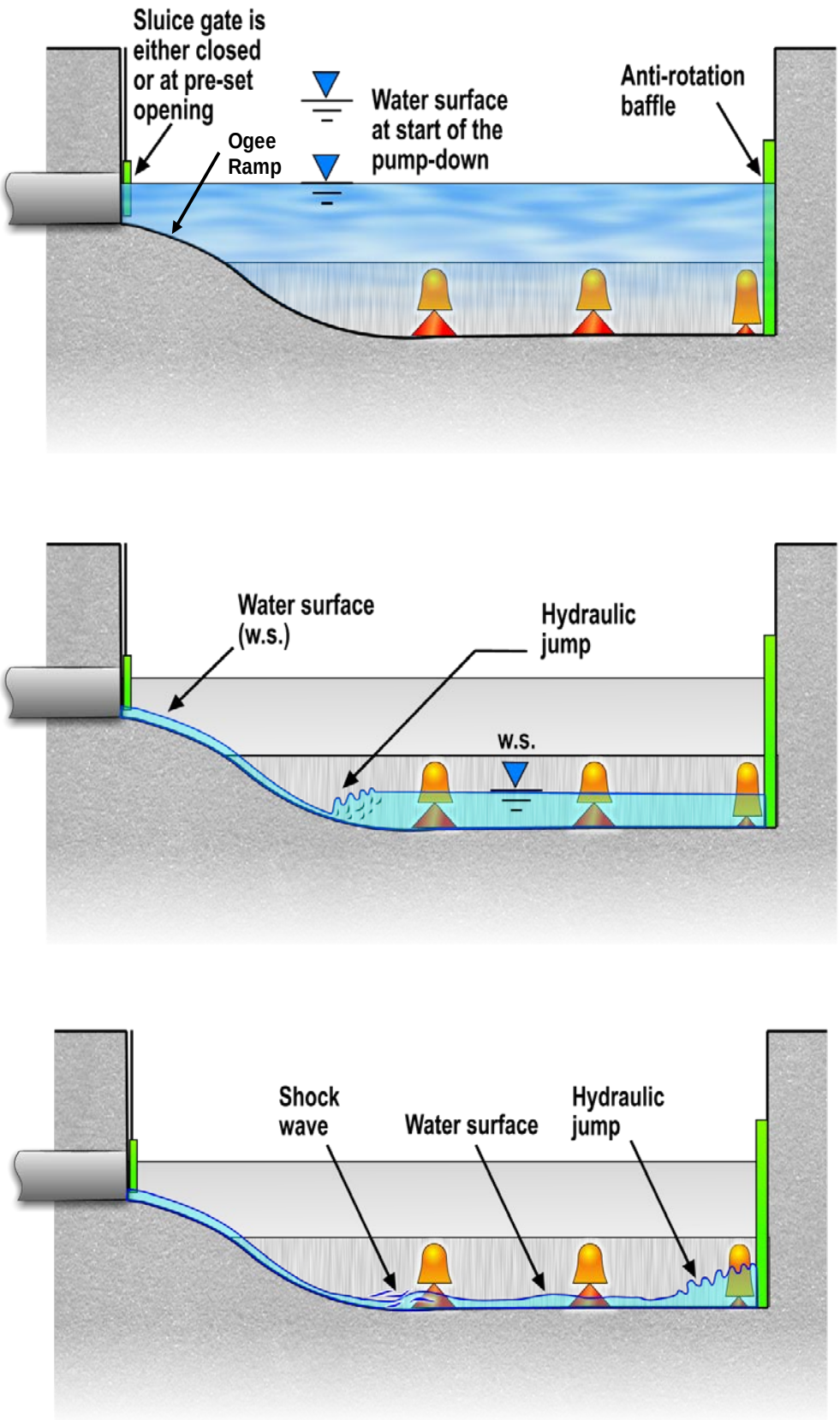

Figure 5-4. Section view and cleaning cycle for trench style wet well

5.3.3.1 Approach pipes

The RCPS will have a set of two approach pipes that convey flow from the influent screen afterbay to each of the wet wells. These pipes will be designed to maintain minimum velocities of 2.5 ft/s and 3.5 ft/s at ADWF or PDWF conditions, respectively, if possible to flush settled debris within the sewer on a daily basis. If target velocities for the approach pipes under PDWF conditions cannot be achieved, then the approach pipes will achieve sufficient scouring velocities during the wet well cleaning cycles. The velocity in the approach pipe, upstream from the wet well, will be no greater than 4.0 ft/s at PWWF.

The approach pipe upstream from the trench will be straight and free of fittings or devices that disrupt the flow uniformity entering the trench for a distance equal to a minimum of five times the approach pipe diameter.

5.3.3.2 Wet well design

The RCPS will consist of two trench-style wet wells that will incorporate features to optimize the scouring velocities within the wet well during cleaning operations and to minimize pump problems resulting from flow currents. The wet well design will follow the Hydraulic Institute/ American National Standards Institute Standard for Rotodynamic Pumps for Pump Intake Design (ANSI/HI 9.8) with some modifications. The pump station will have two wet wells each containing two dry weather pumps and two wet weather pumps. The location of the dry weather and wet weather pumps will alternate beginning with a dry weather pump closest to the wet well inlet.

TM 8.1(Appendix E) includes guidelines for the following wet well-related elements:

- **Pump inlet bell.** A suction nozzle, fitted with a flared bell inlet, will be installed on each pump. The suction nozzle will be required to reduce the suction velocity to 4.0 ft/s (no less than 3 ft/s and no more than 5 ft/s) at the maximum capacity of the pump. The wet weather pump inlet bell diameter, $D_{wetweather}$, and the dry weather pump inlet bell diameter, $D_{dryweather}$, will be calculated separately.
- **Wet well dimensions.** The wet well cross sectional dimensions are a function of the pump bell inlet diameter and the incoming approach pipe diameter. The wet well cross section consists of a rectangular trench with a trapezoidal section above the trench.
- **Design ramp for cleaning.** An ogee ramp is required to gather speed down the ramp to cause a hydraulic jump during cleaning cycles. The hydraulic jump occurs at the base of the ramp that moves along the trench floor to the last pump. The purpose of inducing a hydraulic jump is to scour the trench floor and mobilize solids for suction by the last pump. The ogee ramp will consist of an upper curve and a lower curve connected by a 45-degree tangent.
- **Pump spacing.** Pump intakes will be spaced a minimum of $2.5D_{wetweather}$ from pump centerline to centerline. The first pump will be spaced a minimum of $0.5D_{dryweather}$ from the end of the ogee ramp to the centerline of the first pump.
- **Inlet floor clearance.** The pump inlet clearance from the floor for the first three pumps will be a minimum of $0.5D_{wetweather}$ for the wet weather pump and $0.5D_{dryweather}$ for the dry weather pump unless otherwise specified.
- **Flow splitters.** A flow splitter will be installed on the floor of the wet well at the centerline of the trench.
- **Fillets.** Fillets will be installed along the sides of the trench floor the entire length of the wet well trench to eliminate sidewall vortices. The fillets will extend from the top of the ogee ramp to provide a good flow pattern down the ramp to the end wall. Fillets will have a 45-degree slope with a height of $0.38D_{wetweather}$.

- **Last pump.** The last pump is a wet-weather pump and will be used for cleaning and will be located in a recessed pocket lower than the main floor of the wet well. The pocket will help collect debris scoured during the cleaning process for conveyance into the last pump.
- **Anti-rotation baffle and floor cone at last pump.** An anti-rotation baffle will be placed between the last pump and the back wall to prevent circulation of liquid between the pump and the wet well wall. A floor cone will also be placed under the last pump to aid flow movement.
- **Cleaning.** Cleaning will be conducted between flow rates of 1/3 to 2/3 of the capacity of the last pump. These flow rates can be achieved during PDWF or by temporarily closing the wet well influent gate to the opposite wet well to build up sufficient flow. At these flow rates, the wastewater will move down the ramp at supercritical velocity and form a hydraulic jump at the base of the ramp. The hydraulic jump re-suspends settled solids and conveys solids to the last pump. Additionally, during cleaning, the water level is drawn down and scum build up is flushed out of the wet well and removed by the last pump.
- **Level control.** Flow control and sequenced pump starts and stops will be accomplished based upon the water surface level in the pump station lead wet well. VFDs will vary the speed from each of the pumps to maintain the normal depth level of the approach pipe.

5.3.3.3 Pump selection

Pumps for the proposed RCPS Project were selected per the requirements described in TM 8.1 (Appendix E). Table 4-1 provides a summary of the results from the pump selection analyses. Vaughan submersible chopper pumps were selected for the dry weather conditions because they are a leading manufacturer of chopper pumps and met SVCW's design preferences. Flygt submersible pumps were selected for wet weather pumps because they have a wide selection of pumps that could accommodate the large range of wet weather conditions. Other pump manufacturers should be considered during subsequent design as long as they can meet the hydraulic requirements dictated by the large range of flows.

The new pumps are large and will require cranes and monorails to remove. The type of pump removal equipment being considered includes the following:

- Portable gantry crane
- Bridge crane
- Boom truck/crane
- Combination of above listed equipment

5.3.3.4 Discharge piping and valve vault

The discharge piping will be sized for maximum velocities of 8 to 10 ft/s at the maximum capacity of the pumps. The dry weather and wet weather pump discharge piping will be sized accordingly.

There are two valve vaults, one for each side of the wet well (see Figure 5-3). Each vault will contain four swing check valves and four isolation plug valves that are located on the pump discharge piping. The open/close status of the swing check valves will be monitored through SCADA to ensure that they are open when the associated pump is operating. The valve vault will also include a 4-inch drain pipe connected to the wet well. There will be no ventilation provided in the valve vaults.

5.3.4 Effluent flow metering

Effluent leaving the pump stations will be measured by a flow meter located in a vault downstream of where the two pump manifolds combine. The flow meter will consist of a magnetic meter with integral converter/indicating transmitter to measure the total flow through the pump station.

5.3.5 Gas detection system

A gas detection system will be located in the screening building and within the wet wells to detect explosive and/or hazardous conditions. The gas detection system consists of field mounted sensing elements and monitoring assemblies to detect the lower explosive limit (LEL) of combustible gases or vapors, low and high oxygen levels, and high hydrogen sulfide (H_2S) levels. The gas detection system alarms and alerts staff when the LEL, oxygen, or H_2S are outside of accepted ranges and may cause hazardous conditions. Alarms will be sent to SCADA. Audible and visual alarms will also be mounted outside of the building to alert staff of the hazardous conditions prior to entering the structures. An additional alarm will be set through SCADA to the main control panel. However, these gas detection systems are not intended to replace personal protective equipment used as part of permitted confined space entry activities.

5.3.6 Odor control system

An on-site odor control system will treat odors from wet wells and the screening building. Chemical scrubbers were selected by SVCW as the odor control technology.

A single-stage odor control system is assumed for the pump station preliminary design. A two-stage system may be needed if it is determined in subsequent design stages that a single stage does not provide sufficient odor reduction at offsite sensitive receptors.

Because current odor concentration data were limited for the pump station sites, a gas-phase H_2S concentration of 5 parts per million per volume (ppmv) was assumed for odor control system inlets in the 2015 predesign. It is recommended that further odor sampling during a two-week warm weather (August to September) period should be performed for detailed design to confirm average and peak H_2S loads to the new odor control systems.

The air change rate required is 12 air changes per hour for the wet wells to meet National Fire Protection Association (NFPA) Class 1, Division 1 requirements, and 20 air changes per hour for the screen building. Lower air exchange rates may be considered for when the screen building is unoccupied; therefore, the air change rates need to be refined during final design. The odor control equipment will include two supply fans and three exhaust fans, which will direct foul air to the chemical odor control unit.

Each pump station will require a minimum of single-stage scrubber using hypochlorite and caustic to achieve 99.5 percent H_2S removal. A two-stage system will need to be further evaluated during detailed design. Two chemical storage tanks will be required for each site. High-density, cross-linked polyethylene will be used for the chemical storage tank material. The tank will also include double-wall containment.

5.3.7 Standby generator

Electrical equipment will be upgraded and/or replaced to meet the increased pumping capacity and reliability requirements. The new pump station will have larger pump motors than the existing and will require a new standby generator. The standby generator will need to provide capacity (sufficient to power the pump stations vital components) in case of failure of normal pump station power for reliability.

The generator will be located indoors and be a skid mounted unit. A separate fuel storage tank with secondary containment will be provided with provision for fuel transfer during periods of generator operation, which will be located outdoors and provide 24 hours of fuel capacity at 100-percent generator loading. Fuel storage tank and transfer pumps will be coordinated with the generator

manufacturer during final design. A day tank with double walled containment will also be provided for the generator.

Based on the current RCPS Project conditions, generator sizing for the RCPS is 2,500kW/3125kVA. Generator and fuel tank sizing needs to be confirmed during detailed design.

A permanently installed load bank will be provided for the generators. The load bank will be installed on the duct or the radiator of the generator. The load bank will be sized per manufacturer's recommendations. The load bank will be required for use when only the dry weather pumps (smaller HP pumps) are used. The size difference in wet weather and dry weather pumps will require the load bank to prevent "wet stacking" of the generator exhaust system. Load banks will be used to exercise the generator once a month; however, this exercise needs to be in accordance with the pump station's air permits.

5.3.8 Surge control system

Surge protection measures will be incorporated to prevent down surge pressures from falling below –7 pounds per square inch gauge anywhere in the pipeline. This criterion will be used for the selected HDPE force main as a safety factor against vapor cavity formation and potential pipe collapse.

Transient control equipment used in the design will include hydro-pneumatic surge tanks, vacuum breaker valves, combination air-release/vacuum breaker valves, and recirculation pumps. Valves and surge tanks will be installed in pairs to allow for isolation and maintenance.

Hydro-pneumatic surge tanks will be installed at the RCPS. Surge tanks will be provided with pumped mixing/recirculating loops to prevent grease layer formation. The hydro-pneumatic surge tanks will completely empty during a high flow surge event; therefore, vacuum breakers are required on the pipe connecting the tanks to the force main. Air release will be prevented at these locations so that air admitted to the force main by the vacuum breakers may return to the tanks to the greatest extent possible during system restart.

Hydro-pneumatic surge tanks will be the air pressurized, non-bladder type. Air compressors will be sized to charge the surge tanks to operating pressure in less than three hours. Pipeline vacuum breaker valves will be the combination air-release/vacuum breaker type.

Horizontal, constant speed, end suction, frame mounted, high pressure chopper pumps for pumping fluids containing wastewater and wastewater solids will be installed for each surge tank facility. The pumps will be used for recirculating raw municipal wastewater in the surge tank. A dedicated pump will be provided for each surge tank. The pumps will be installed within an acoustical enclosure capable of reducing the noise level of the pump and motor, including all ventilation fans, to a maximum of 110 dBA at a distance of 25 feet from the equipment in any direction.

5.3.9 Site utilities

As discussed in Section 2.1.3, the RCPS influent will connect to a new 60-inch gravity line from the Redwood City collection system. The pump station will discharge to the new 48-inch force main. Details for the RCPS connections to the existing conveyance system and the new 48-inch diameter force main will be reviewed during final design and coordinated with the existing force main configuration.

The configuration of the new RCPS will result in the need to identify a new location for the transformer. The existing transformer is located immediately outside of the fence, south of the northern access gate. Given the proposed facilities and layout of the new RCPS, this area will no longer be available. Coordination with PG&E to identify a location for a new transformer and to

relocate underground electrical lines will be required as part of final design. It should be noted that a larger transformer will be required due to increased electrical loads at the RCPS, this is further discussed in Section 5.4.

Potable water service to the site will also likely require some revisions pending final underground piping layout and location of where potable water service is needed. It is not anticipated the water meter will require relocation but construction of the piping connections to the influent 48-inch diameter and future 60-inch diameter gravity lines may require relocating the water meter. Any revisions to the location will be coordinated with the City of Redwood City.

A new recycled water service line will be needed for the RCPS site as the existing pump station does not currently have recycled water service and it is anticipated that recycled water will be used for wash down purposes. Redwood City has an existing 24-inch diameter recycled water pipeline located along the south side of the site in the Caltrans right-of-way for US-101. A new service connection on this line should be included as part of the design. This connection will require coordination with Redwood City, the owner of the recycled water line, and Caltrans to obtain an encroachment permit for constructing the portion of the new service connection in their right-of-way. There is an existing tee and blind flange on the recycled water line in the vicinity of the proposed new service line. Utilizing the tee as a point of connection may be an option but will be coordinated with Redwood City as future expansion of their system may preclude this as an option.

5.4 Energy

Currently, the RCPS has a power consumption of approximately 510,000 kWh annually, or on average, 42,500 kWh per month. The proposed modifications to the pump station discussed in the previous section will increase RCPS electrical demands. Estimated electrical demands following the rehabilitation of the RCPS are approximately 656,000 kWh annually. The majority of the increase in energy demands is associated with the fans in the proposed odor control equipment. Additional increases in energy use result from higher capacity pumps and the screening equipment.

The existing PG&E electrical service does not have the capacity for the increased pumping loads; therefore, construction of the new RCPS will require replacement of the existing utility transformer with a larger unit and a new motor control center (MCC). As discussed in Section 5.3.9, a new location for the proposed transformer must be identified, as the space of the existing transformer occupies will no longer be available given the proposed layout of the new RCPS. The location of the new transformer will be coordinated with PG&E during subsequent design.

Where possible, energy efficient equipment will be incorporated into the design of the RCPS, including:

- VFDs for both wet weather and dry weather pumps
- LED light fixtures
- Premium efficient pump motors

Additional energy efficient measures for operations and construction will be explored further during subsequent design.

5.5 Additional Design Considerations

The following site considerations will be included in the final design and construction of RCPS.

5.5.1 Civil

New facilities to be constructed on the RCPS site include pumps, piping, wet wells, valves, valve vaults, and new building structures. The following objectives will be included in the civil site improvements:

1. Provide vehicle and pedestrian access to new and upgraded facilities and structures.
2. Provide site grading to minimize earthwork and achieve positive drainage of storm water runoff, whether it be discharged offsite or to the wet well.
3. Provide a secure site with two entrance/exit points.
4. Provide connections to existing and new force mains.
5. Transfer flows from the old pump station to new force main and/or new pump station to old force main depending on construction sequencing.
6. Remove and abandon old pump station facilities.
7. Provide additional civil improvements required for raising the elevation of critical structures above existing elevation for flood protection.
8. As part of the civil design, provide the following:
   a. Utility Coordination
   b. Driveway Layout/Traffic Access
   c. Survey Control
   d. Site Grading
   e. Drainage
   f. Site Security/Access

5.5.2 Geotechnical

A TM for the Pre-Design Geotechnical Interpretive Report (GIR) was completed by DCM Consulting, Inc. for SVCW's Pump Station Predesign Project (Appendix C). The GIR is based on project information provided by BC and on a Predesign Geotechnical Data Report (GDR) completed by Jacobs Associates on October 22, 2013 (Appendix B). The following geotechnical information will be incorporated into the final design.

5.5.2.1 Existing conditions

All predesign test borings for the RCPS Project encountered artificial fill. The composition and consistency of artificial fills is highly variable and can range from non-cohesive sands and gravels to cohesive clays with oversize natural and manmade materials. Typically, in this Bay margin area, the artificial fills are underlain by YBM, characterized by extremely high water content, low dry density, low shear strength, and high compressibility. The YBM is underlain by much stiffer (and older) alluvium referred to as Old Bay Clay, characterized by lower water content, higher dry density, higher shear strength and lower compressibility.

5.5.2.2 Excavations

The pump station excavations will vary in depth from 20 to 34 feet and can be completed by appropriately sized conventional excavation equipment. All RCPS Project excavations will require vertical shoring. For purposes of shoring design, groundwater should be assumed to be at the ground

surface. All RCPS Project excavations must be fully shored and supported with "watertight" shoring such as internally braced interlocking sheet piles. Any gaps in shoring, such as at pipeline penetrations, must be fully sealed to maintain excavation "water tightness." Jet grouting is the preferred method for sealing shoring gaps. With a "watertight" shoring system, external dewatering should not be required. Regarding the floor of the excavation, the intent is to drive the shoring into competent material to prevent upheaval and boil.

External dewatering is not advisable as it can cause subsidence of soft ground and settlement of nearby pipelines, utilities, and structures. Internal dewatering can be kept to a minimum by establishing adequate toe embedment of sheet piles to form a cutoff to groundwater inflows. The minimum toe embedment for sheet piles in the RCPS Project soil and groundwater conditions is 15 feet below the base of excavation.

5.5.2.3 Pipelines

The RCPS pipelines will be constructed at various elevations and underlain by a variety of soil conditions from fill to soft YBM to stiff Old Bay Clay. All pump station pipelines should be underlain by a minimum of twelve inches of foundation rock (3/4-inch by 1 ½-inch crushed rock) wrapped in non-woven geotextile filter fabric. Foundation rock is to be compacted in place by a minimum of three passes of a vibraplate compactor. Pipeline embedment material should extend from foundation rock to twelve inches over the top of the pipeline. Pipe embedment material should consist of Class 2 aggregate base rock compacted to a minimum of 90 percent relative compaction. Trench backfill should also consist of Class 2 aggregate base rock compacted to 90 percent relative compaction. At all locations where pipelines are underlain by YBM, trench backfill must consist of lightweight aggregate with a maximum saturated surface dry unit weight of 60 pounds per cubic ft. As an alternative to lightweight backfill, all YBM should be removed from below the pipeline and backfilled with foundation rock wrapped in nonwoven geotextile fabric. Other backfill methods, such as flowable fill or self-compacting material where soft materials (i.e. bay muds) exist, will be explored further in final design.

All RCPS pipelines should be designed to accommodate up to one inch of differential movement at the interface of the pump structure and pipeline.

5.5.2.4 Pavement

The asphalt pavement section at all pump stations should consist of a minimum of three inches of asphaltic concrete over twelve inches of Class 2 aggregate base rock. The pavement subgrade soil must be scarified to a depth of eight inches, moisture conditioned to near optimum moisture content and compacted to a minimum of 95 percent relative compaction per ASTM D1557. Use of lime treated base may be needed where soft soils are present in paved areas.

Asphalt pavement section replacement in City streets must match existing but in no case should be less than three inches of asphaltic concrete over twelve inches of aggregate base rock (compacted as described above). Final pavement sections should be determined and reviewed by the City of Redwood City as part of the final design.

5.5.3 Corrosion mitigation

BC's Subconsultant, V&A, performed a soil corrosivity investigation and made recommendations for corrosion control of the buried metallic yard piping. The objectives of the investigation were to perform field soil resistivity testing, review existing corrosion data, perform chemical analysis of selected soil samples, and provide corrosion control recommendations for the buried yard piping and concrete structures at each pump station.

Based on the average field soil resistivity data, the soil is highly corrosive to buried metallic piping. The area east of US-101 is located on land reclaimed from the bay and contains bay mud and high chloride (salty) soils. The soil analysis confirmed that the soils at all three sites are highly corrosive to both buried steel and reinforced concrete.

The following recommendations are for corrosion control:

- **Corrosion control measures for buried metallic structures.** Recommendations include applying a bonded dielectric coating, electrically isolating the piping, installing imposed current cathodic protection, and bonding non-welded, non-insulating pipe joints.
- **Application of coatings for buried applications.** Buried infrastructure will be coated with 100-percent solids polyurethane and fusion bonded epoxy and tape-wrapped.
  - **Cement mortar coated pipelines.** These pipelines will have cementitious mortar coatings on steel appurtenances, mortar coating on exposed steel to a minimum of two inches, electrical isolation of yard piping, installation of impressed current cathodic protection, and bonded non-welded, non-insulating pipe joints.
  - **Buried concrete structures.** Buried concrete structures will include cast-in-place concrete structures with a minimum of three inches of concrete over rebar, a minimum of two inches over rebar for precast piles (if used), water-to-cement ratios of less than 0.4, application of applicable corrosion inhibitors, and adhere to specific concrete, sand, and water.

Regarding corrosion mitigation on structure and pipeline interiors due to H_2S gas exposure from the sewage, the following mitigation measures are recommended:

- **Corrosion control measures for concrete structures.** Recommendations include applying a plastic lining (such as Ameron's T-lock) to all interior surfaces not typically submerged in wastewater. All metal components exposed to sewage will also be Type 316/316L stainless steel. In addition, odor control measures will also be used to reduce the buildup of H_2S gas within the wet wells.
- **Piping.** Where possible, piping comprised of corrosion-resistant material will be used. If not feasible, coatings and other means of corrosion protection will be implemented.

5.5.4 Safety issues

The property boundary will be lined by fence or wall with locked, gated access to prevent unauthorized personnel from entering the property. In addition, all openings onsite will be grated or covered with a hatch to provide fall protection. O&M staff will follow all safety protocols and procedures established by SVCW's safety program. SVCW will identify any safety issues at the new pump station that are not currently covered under the current safety protocol.

5.5.5 Property acquisition needs

No permanent property acquisition is required for RCPS improvements. The new pump station will be constructed on the same property as the existing pump station.

Temporary construction easements will be required for staging areas (Section 5.6.1.6). Land acquisition for laydown areas and temporary construction easements will need to be identified and acquired during final design.

5.5.6 Operational plan

Dry weather operation will be similar to existing operations at the pump station. The RCPS will pump flow from the Redwood City collection system into the SVCW conveyance system. There will be some modifications to pumping requirements. Under existing conditions, the RCPS pumps flow from the

Redwood City collection system to the WWTP. With the proposed conveyance system modifications (Section 2.3), the RCPS will pump only to the start of the proposed gravity pipeline at the BIIS.

Modifications are proposed for the wet weather operation of the RCPS. The pumps at the MPPS do not have enough head to pump wet weather flows from the WBSD collection system to the WWTP or the BIIS. As part of the improvements to the RCPS, infrastructure will be built such that wet weather flows from the MPPS can be routed through the RCPS to be re-pumped. The wet weather operational system will be used when MPPS flow rates exceed 14 mgd.

5.5.7 Permits required for project implementation (federal, state, regional, local)

The following permits and approvals are anticipated to be required for construction of the improvements to the RCPS. The following list is not inclusive of all permits that will be required:

- California Department of Transportation (Caltrans) – Encroachment Permit, Easement
- PG&E – Utility Relocation Agreement, Easement
- City of Redwood City – Street Excavation and Encroachment Permit, Permanent and Temporary Easements
- Bay Area Air Quality Management District – Authority to Construct

5.5.8 Site security

Currently, there are two access points to the RCPS, both of which are subject to flooding. A new entrance is proposed as part of the modifications, though the Redwood City police station property, which is adjacent to the RCPS property. New security fencing and lighting are proposed as part of the improvements to the RCPS.

5.5.9 Structural and architectural

Dead loads will consist of the weight of the structure and all equipment of a permanent or semi-permanent nature including but not limited to pumps, cranes, and HVAC equipment. A superimposed dead load of 20 pounds per square foot will be included in the design of floors and roof structures to account for HVAC ductwork, piping, electrical wiring and lighting. Partition loading allowance will be computed based on materials used.

Architectural criteria will be incorporated as part of the final design with the intent to repurpose existing buildings and make them blend in with their respective surroundings, including the Redwood City police station. Redwood City will be contacted for input during final design.

5.5.10 Electrical

Power will be supplied by PG&E and a new transformer will be required to accommodate the increased power requirements associated with the new pump station operations. The existing transformer at the RCPS supplies both the pump station and adjacent Redwood City police station, and the new transformer will also supply both facilities. Due to the layout of the proposed RCPS, the new transformer will be at a different location than the existing transformer that it replaces. This will require relocation of some electrical infrastructure. The location of the new transformer will be coordinated with PG&E during subsequent design.

5.5.11 Lighting

The proposed Conveyance System Project proposes the installation of outdoor, temporary lighting during construction.

Night lighting during construction, if needed, will average 25-foot-candles. Night-time lighting could adversely affect motorists on US-101 or adjacent roadways. The pump stations would be temporarily fitted with LED lights during the construction period to illuminate to a level equivalent to existing lighting. These lights would be directed downward and oriented so that lights would not directly be visible from nearby residences, or located on the sides of the buildings away from nearby residents, to minimize light and glare effects.

Given the design features, potential impacts related to light and glare are expected to be less than significant. In summary, the construction phase of the RCPS Project is temporary; while in the short-term it would alter the visual environment, it would not substantially degrade the overall visual character or quality of the RCPS Project area.

Following construction, there would be no lighting on the staging areas. Lighting would not be significantly different than the existing lighting at RCPS. Lighting consistent with the Redwood Shores Bayfront Specific Plan Objective 6.2.1, will be used for parking and driveways/drive aisles and security lighting. The lighting would consist of LED lighting and will vary between 0.5 to 2.0 foot-candles.

5.5.12 Instrumentation and controls/SCADA

The existing pump station control systems will be replaced in their entirety with new equipment to match SVCW's Automation Standards. The current pump station has switchgears, which will be replaced with switchboards. The pump station will be remotely monitored and controlled from the SCADA human machine interface (HMI) work station at the WWTP.

Redundancy will be provided for some critical instrumentation (i.e., dual wet well level control). Additional requirements for redundant instruments are included in SVCW's "Level Instrumentation Configuration for Pump Station Wet Wells" document.

The requirements for interfacing packaged equipment to the pump station control system including implementation of Programmable Logic Controllers and the SCADA HMI monitoring and control requirements will need to be evaluated during final design.

Automation strategies will be further developed as the design is progressed. The automation strategies describe the operation of the major processes at the pump stations including influent screening, pump control, flow metering, odor control, standby power supply, and surge control. The automation strategies will be described in control narratives and are shown graphically on the process and instrumentation diagrams (P&IDs, Appendix F).

Automation strategy development will include the following tasks:

- Development of control narratives that describe the major process systems at the pump stations.
- Development of P&IDs including SVCW's standard equipment, valving, and instrumentation conventions.

SVCW's automation standards are currently being revised; therefore, the final designs will incorporate the new automation standards. P&IDs were developed based on further refinement of the conceptual pump station processes presented in the SBSA Conveyance System Master Plan (Winzer and Kelly, 2011). The P&ID drawings display the major pieces of equipment, valving, instrumentation, and input/output signals. The P&IDs utilize SVCW's standard equipment and valve identification naming convention dated April 1, 2013 for assigning names to equipment, valves, and instrumentation. The latest equipment and valve naming convention needs to be obtained from SVCW and implemented during final design.

5.5.13 Interim operations, bypass requirements

The proposed Conveyance System improvements will be implemented over several years as discussed. Sequencing and interproject coordination are further discussed in Section 5.6.

5.5.14 Stakeholders

Close coordination with the City of Redwood City will be required to mitigate impacts of planned developments, construction and zoning changes. In addition, the Inner Harbor Specific Plan's architectural, landscaping and storm water control requirements will be taken into consideration.

Access to the RCPS site will also be critical during construction. Maple Street is very congested and access will need to be maintained to Docktown and the nearby shelter and correctional facilities.

5.5.15 Environmental impacts and mitigations

Environmental impacts and mitigation measures were identified by the proposed Conveyance System Project Draft EIR (SVCW, 2016). The RCPS and staging areas are predominantly located in developed areas that undergo constant disturbance. A list of the major significant impacts related to the RCPS Project and a summary of the proposed mitigation measures extracted from the Draft EIR are presented in Table 5-2. For the sake of completeness, the entire text has been copied for each relevant impact and mitigation measure, although some of the description may not be specifically relevant to the RCPS Project.

Table 5-2. RCPS environmental impacts and mitigations

Impact	Mitigation Measures
AIR-1: The proposed Project construction emissions would exceed the average daily threshold of 54 pounds per day for NO_x for calendar year 2018 which is a significant impact.	The construction contractor shall implement the following measures at the Project sites: • Ensure that all construction equipment (including generators) larger than 25 horsepower (HP) and used at the Project site for more than two work days meet, at a minimum, U.S. EPA Tier 2 engine emission standards; • Ensure that all stationary equipment larger than 25 HP (e.g., generators and hydraulic power packs) meet California Air Resources Board's (CARB's) most recent certification standard for off-road heavy duty diesel engines; • Portable diesel-powered equipment (including generators) larger than 25 HP and used at the project site for more than two work days meet, at a minimum, U.S. EPA Tier 3 engine emission standards for NOx; • Portable diesel-powered equipment used at the RCPS construction sites for more than two days shall include diesel particulate matter control devices in the form of CARB currently Verified Diesel Emission Control Strategies (VDECS); • All exposed surfaces shall be watered two times per day, or as necessary to control dust; • All haul trucks transporting soil, sand, or other loose material off-site shall be covered; • All visible mud or dirt tracked-out onto adjacent public roads shall be removed using wet power vacuum street sweepers at least once per day. The use of dry power sweeping shall be prohibited; • All vehicle speeds on unpaved roads shall be limited to 15 miles per hour; • All paving shall be completed as soon as possible after pipeline replacement work is finished; • Idling times shall be minimized either by shutting equipment off when not in use or reducing the maximum idling time to five (5) minutes (as required by the California airborne toxics control measure Title 13, Section 2485 of California Code of Regulations (CCR)). Clear signage shall be provided for construction workers at all access points; • All construction equipment shall be maintained and properly tuned in accordance with the manufacturer's specifications. All equipment shall be checked by a certified mechanic and determined to be running in proper condition prior to operation; and

Table 5-2. RCPS environmental impacts and mitigations	
Impact	**Mitigation Measures**
	• Post a publicly visible sign with the telephone number and person to contact regarding dust complaints. This person shall respond and take corrective action within 48 hours. The BAAQMD's phone number shall also be visible to ensure compliance with applicable regulations.
Impact AIR-2: Construction activities at the RCPS would result in significant cancer risk (greater than 10.0 chances per million) at the maximally affected sensitive receptor. Construction activities at other portions of the Project would not have significant impacts.	MM AIR-2: Implementation of Mitigation Measure AIR-1 described above would reduce construction health risk impacts to a less than significant level.
Impact BIO-10: Project construction activities in the Project footprint for the RCPS Replacement have the potential to result in direct impacts or indirect disturbance to special-status nesting birds and other native nesting birds protected by the Migratory Bird Treaty Act (MBTA) and California Fish and Game Code (CFGC). Construction could directly destroy active nests or cause disturbance that results in nest abandonment	MM BIO-4 (applicable to Impact BIO-10): Potential significant impacts to nesting special-status and other native nesting birds will be mitigated through avoiding disturbance to active nests. Initiation of construction activities during the avian nesting season (February 1 through August 31) will be avoided to the extent feasible. For areas where direct impacts to vegetation will occur, vegetation removal will be conducted outside of the nesting season to avoid potential delays in construction schedule due to nesting activity, as is feasible. Additionally, if water is present in the ornamental ponds prior to construction and it is necessary to drain one or both ponds, the ornamental ponds will be drained during the non-breeding season (i.e., they will be drained between September 1 and January 31). If construction initiation and/or ornamental pond draining during the nesting season cannot be avoided, pre-construction nesting bird surveys will be conducted within 14 days of initial ground disturbance or water/vegetation removal to avoid disturbance to active nests, eggs, and/or young of nesting birds. Surveys can be used to detect the nests of special-status as well as non-special-status birds. Surveys will encompass the entire construction area and the surrounding 500 feet. An exclusion zone where no construction would be allowed will be established around any active nests of any avian species found in the Study Area until a qualified biologist has determined that all young have fledged and are independent of the nest. Suggested exclusion zone distances differ depending on species, location, and placement of nest, and will be at the discretion of the biologist and, if necessary, USFWS and CDFW. These surveys would remain valid as long as construction activity is consistently occurring in a given area and will be completed again if there is a lapse in construction activities of more than 14 consecutive days during the breeding bird season.
Impact CUL-1: Construction activity near RCPS, in areas that have not been subject to previous disturbance, could encounter cultural resources which would be considered a significant impact.	MM CUL-1: The project shall implement either of the following measures which would reduce the impact to less than significant level. • Avoid the buried historic-era deposit by prohibiting construction associated with the pump station that would reach more than two feet below the present paved parking lot surface, primarily in construction staging areas. • If avoidance is not possible, the Project should retain a qualified historical archaeologist to monitor excavation at the three potentially intact areas at RCPS. The historical archaeologist would have the authority to stop construction in the unlikely event that intact features are found, and excavate and fully document features for Project mitigation recommendations. Monitoring would be limited to the zone of buried cultural deposits, within five feet of the parking lot surface, or until bay mud is encountered.
Impact CUL-2: Construction activities associated with the proposed Project could disturb unknown buried archaeological resources.	MM CUL-2: In the event cultural resources are encountered during construction, work shall halt and the SVCW project manager shall be notified. • All construction activity within 50 feet (15 meters) of the find/feature/site will cease immediately. • If human bones are found, the appropriate County authority (Coroner) and the SVCW project manager shall be notified immediately. • In the event that Native American human remains or funerary objects are discovered, the provisions of the California Health and Safety Code shall be followed. Section 7050.5(b) of the California Health and Safety Code states: *In the event of discovery or recognition of any human remains in any location other than a dedicated cemetery, there shall be no further excavation or disturbance of the site or any nearby area reasonably suspected to overlie adjacent remains until the coroner of the county in which the human remains are discovered has determined, in accordance with Chapter 10 of Part 3 of Division 2 of Title 3 of the*

Table 5-2. RCPS environmental impacts and mitigations

Impact	Mitigation Measures
	Government Code, that the remains are not subject to the provisions of Section 27492 of the Government Code or any other related provisions of law concerning investigation of the circumstances, manner and cause of death, and the recommendations concerning treatment and disposition of the human remains have been made to the person responsible for the excavation, or to his or her authorized representative, in the manner provided in Section 5097.98 of the Public Resources Code.
Impact GEO-1: The soil at the Project site is highly corrosive to buried steel and concrete. Therefore, buried reinforced concrete structure would require corrosion protection to reduce the impact to less than significant.	MM GEO 1: The following measures or equivalent measures are recommended for corrosion control and are proposed as part of the Project for the steel and concrete portions of the Project that are buried or are in direct contact with the soil. • Buried reinforced concrete structures should be constructed of durable concrete such as described in ACI Standards 201.2R and 222R. • The water/cement ratio should not exceed 0.45. • The concrete cover applied over all steel reinforcement bars should generally be a minimum of two (2) inches thick. • All concrete used in the area would be a mix of 50% Type II and 50% Type V cement. • Sand and water used in concrete mixtures should contain a maximum of 100 ppm of water-soluble chloride ions and water-soluble sulfate ions and have a pH in the range of 6.5 to 8.0. Water used in concrete mixtures should be potable water.

Impact HAZ-1: Construction of the proposed Project could expose construction workers to risks from hazardous materials contamination or from the storage, use and/or disposal of hazardous materials.	MM HAZ-1.1: Prior to initiating earthwork activities, sampling and laboratory analyses should be conducted at planned earthwork locations where spill incidents appear most likely to have impacted soil and/or groundwater, including at the BPS site, the northerly portion of the planned gravity pipeline alignment, and the northeastern portion of the SCPS site. This shall be done in order to establish specific, appropriate site management protocols, including handling and disposal alternatives for contaminated materials and health and safety protocols.
	MM HAZ-1.2: This measure shall be implemented before and during construction of the gravity pipeline and pump stations, as well as any demolition.
	• A Site Management Plan (SMP) and Health Safety Plan (HSP) shall be prepared by the project contractor(s) and submitted to SVCW for review.
	• The SMP and HSP shall include the following:
	  • Site control procedures to control the flow of personnel, vehicles, and materials in and out of the construction site;
	  • Measures to minimize dust generation, storm water runoff, and tracking of soil off-site;
	  • If excavation de-watering is required, protocols to evaluate water quality and discharge/disposal options;
	  • Protocols for completing earthwork activities in areas where impacted soils, soil vapor, and/or groundwater are present or suspected;
	  • Worker training requirements, health and safety measures and soil handling procedures;
	  • Protocols to be implemented if buried structures, wells, debris, or unidentified areas of impacted soil are encountered during construction activities;
	  • Protocols to evaluate the quality of soil suspected of being contaminated so that appropriate mitigation, disposal, or reuse options can be determined;
	  • Procedures to evaluate and document the quality of any soil imported to the construction site;
	  • Methods to monitor trenches for the potential presence of volatile chemical vapors;
	  • Protocols to reduce the potential for construction equipment and vehicles to release contaminated soil onto public roadways or other off-site transfer; and
	  • Stockpiling protocols for “clean” and “impacted” soil.

Impact HYD-1: Construction of the proposed Project could increase contaminants in storm water runoff, which could adversely affect the water quality of the San Francisco Bay.	MM HYD-1.1: Prior to the commencement of any ground disturbing activities outside the fenced WWTP site, the project will comply with the State Water Resources Control Board’s NPDES General Construction Activities Permit, to the satisfaction of the SVCW construction manager, as follows: • SVCW will control the discharge of storm water pollutants including sediments associated with construction activities;

Table 5-2. RCPS environmental impacts and mitigations

Impact	Mitigation Measures
	• Permitting for storm water treatment could be obtained by one of two methods. The first option would be to obtain an Industrial Storm Water General Permit by filing a Notice of Intent (NOI) with the SWRCB. The second option would be to reissue the existing individual permit that expires in December 2017 and file an application with revised storm drain discharge into wetlands or the bay. MM HYD-1.2: The project will include Best Management Practices (BMPs) to control the discharge of storm water pollutants including sediments associated with construction activities. Prior to installation, the contractor shall be required to prepare an Erosion Control Plan. The Erosion Control Plan may include BMPs as specified in the Manual of Standards Erosion & Sediment Control Measures for reducing impacts on the storm drainage system from installation activities. The following specific BMPs will be implemented to prevent storm water pollution and minimize potential sedimentation during construction: • Utilize on-site sediment control BMPs to retain sediment on the Project sites; • Utilize stabilized construction entrances and/or wash racks; • Implement damp street sweeping; • Provide temporary cover of disturbed surfaces to help control erosion during installation; • Provide permanent cover to stabilize the disturbed surfaces after installation has been completed; • Store, handle, and dispose of construction materials and wastes properly, so as to prevent their contact with storm water; • Control and prevent the discharge of all potential pollutants, including solid wastes, paints, concrete, petroleum products, chemicals, washwater or sediments, and non-storm water discharges to storm drains and watercourses; • Utilize sediment controls or filtration to remove sediment from dewatering effluent; • Avoid cleaning, fueling, or maintaining vehicles onsite, except in a designated area in which runoff is contained and treated. • Delineate clearing limits, easements, setbacks, sensitive or critical areas, buffer zones, trees, and drainage courses with field markers. • Protect adjacent properties and undisturbed areas from construction impacts using vegetative buffer strips, sediment barriers or filters, dikes, mulching, or other measures as appropriate. • Limit and time applications of pesticides and fertilizers to prevent polluted runoff.

Impact NOI-1: Construction activities in relation to the ambient noise conditions over extended periods could result in a potentially significant impact.	MM NOI -1: The following measures will be required for all construction sites to ensure the exterior noise levels at sensitive receptor locations stay within these thresholds when feasible:
	• Daytime (7:00 a.m. to 10:00 p.m.)
	  • Residential districts: 60 dBA Leq (hr)
	  • Commercial districts: 70 dBA Leq (hr)
	  • Locations with ambient noise near thresholds: 5dBA Leq higher than ambient noise
	• Nighttime (10:00 p.m. to 7:00 a.m.)
	  • Residential districts: 45 dBA Leq (hr)
	  • Commercial districts: 52 dBA Leq
	  • Locations with ambient noise near thresholds: 5dBA Leq higher than ambient noise
	• Noise due to extreme noise-generating construction activities, such as pile driving activities which are necessary for the proposed Project, shall be minimized to the extent feasible. Pile driving activities and other noisy construction activities shall be completed as quickly as possible to limit noise exposure. Where conditions allow, vibratory pile drivers shall be used to drive sheet piles. Pile holes shall be pre-drilled to minimize the number of blows required to seat the pile.
	• All equipment driven by internal combustion engines shall be equipped with mufflers, which are in good condition and appropriate for the equipment. Quieter internal combustion equipment or equipment powered by electrical motors shall be selected to reduce noise levels, where feasible.
	• The construction contractor shall utilize “quiet” models of air compressors, ventilation fans, and other stationary noise sources where technology reasonably exists.
	• Unnecessary idling of internal combustion engines shall be prohibited.

Table 5-2. RCPS environmental impacts and mitigations

Impact	Mitigation Measures

	• Construction staging areas shall, where practical, be established at locations that will create the greatest distance between the construction-related noise sources and receptors nearest the Project site during all Project construction.
	• Locate stationary noise sources as far from receptors as feasible. If they must be located near receptors, adequate muffling (with screens and enclosures where feasible and appropriate) will be used as necessary to stay within the above noise level thresholds. Any enclosure openings or venting will face away from receptors.
	• Locate material stockpiles, as well as maintenance/equipment staging and parking areas, as far as feasible from residential receptors.
	• Neighbors located adjacent to the construction site shall be notified of the construction schedule in writing and of significant changes to the schedule.
	• Designate a project liaison that will be responsible for responding to noise complaints during the construction phase. The name and phone number of the liaison will be conspicuously posted at construction areas and on all advanced notifications. This person will take steps to resolve complaints, including periodic noise monitoring, if necessary. Results of noise monitoring will be presented at regular Project meetings with the Project contractor, and the liaison will coordinate with the contractor to modify any construction activities that generated excessive noise levels to the extent feasible.
	• Require a reporting program that documents complaints received, actions taken to resolve problems, and effectiveness of these actions.
	• Hold a preconstruction meeting with the job inspectors and the general contractor/on-site project manager to confirm that noise mitigation and practices (including construction hours, construction schedule, and noise coordinator) are completed.
	• Implement a construction noise monitoring plan which includes a provision for noise monitoring at the nearby receptors to confirm that daytime and nighttime construction noise levels meet daytime and nighttime noise level thresholds at residential and commercial land uses. Construction monitoring shall occur weekly during the first month of general construction at a given site and on a monthly basis, thereafter, to show compliance with the construction noise level thresholds. Additional noise monitoring shall be completed on a more frequent basis if needed, in response to complaints. In the event of noise complaints, the contractor will provide information to SVCW within 48 hours of being notified of the complaint, regarding the noise levels measured and activities that correspond to the complaints, as well as the proposed changes at the site to reduce the noise levels to below the thresholds.
	• In the event the above noise thresholds are not being met, additional noise mitigation measures will be implemented to further reduce noise from construction activities. A site-specific noise control plan shall be developed to identify the specific construction noise control features that will be implemented at the construction site(s). These additional noise mitigation measures could include, but not be limited to, the following
	  • Erecting permanent or temporary noise barriers (at least 12 feet in height) and other noise control features at the perimeter of the construction site(s) between the construction activity and sensitive receptors and/or around major construction noise sources (i.e., noisy equipment) to provide shielding for nearby sensitive receptors. Permanent or temporary noise barriers could include, but would not be limited to, concrete, precast walls, plywood noise barriers, noise control blankets, cargo containers, or hay bales. The exact material, height, and configuration of these barriers shall be decided in consultation with the acoustical consultant, based on the specific equipment or activity that is causing the excessive noise.
	  • Scheduling specific high noise-generating construction activities for the middle of the day.
	• Additional noise monitoring shall be completed after the installation and completion of such measures, to confirm their effectiveness at achieving the above thresholds. If the noise thresholds are still not being met, an acoustical consultant shall make further recommendations to be implemented immediately to reduce noise levels at the construction site(s).

Impact NOI-2: Operational noise from regular operations at the WWTP and the specified pump stations as discussed above would	MM NOI-2: The following noise performance standards shall be applied to noise from regular operations at the WWTP and at the specified pump stations: • Noise resulting from regular (non-emergency) operations of RCPS equipment shall not exceed 46 dBA Leq at night (10 p.m. to 7 a.m.) measured outside the Maple Street façade of the Maple Street

Table 5-2. RCPS environmental impacts and mitigations	
Impact	**Mitigation Measures**
lead to a potentially significant impact.	Shelter. Possible mitigation measures would include, but are not limited to, design alternatives, fan silencers, enclosures, and screen walls. • Low-velocity ventilation systems (which are quieter than standard ventilation systems) and other ancillary noise controls shall be incorporated into the designs, as necessary, to meet the noise performance standards. The following noise performance standard shall be applied to noise from diesel engine-generator operations at WWTP and each of the pump stations: • The sound level from non-emergency operation of the diesel engine-generator at each facility shall not exceed 60 dBA when measured on any real property outside the property lines of the facilities (excluding US Highway 101 (U.S. 101), other roadways, and San Carlos Airport).
Impact UTIL-1: The relocation and modification of existing utilities could result in short-term service disruption impacts during construction.	MM UTIL-1: The project will incorporate the following measures into the Project construction documents: • Prior to and during construction of the gravity pipeline alignment and the proposed connections, all utility work shall be completed with approval and coordination with the respective utility providers to minimize any potential disruption in service. • All utility modifications and relocations shall comply with respective utility providers' notification process for any disruption of service, including USA North requirements.

5.6 Construction and Sequencing

The construction of the Conveyance System will take place in stages and will need to account for the construction of equipment and design considerations discussed previously in Sections 5.1 through 5.5. A constructability review, proposed schedule, sequencing, and interim pump operation are described in this section.

5.6.1 Constructability review

Construction of the new RCPS will require the maintenance and demolition of existing facilities at the RCPS during construction. RCPS will need to be online before some these facilities can be demolished or taken out of service.

5.6.1.1 Existing facilities

The existing pump station consists of the following major equipment and infrastructure:

- Partially buried reinforced concrete structure
- An existing 48-inch gravity sewer line that conveys flows from Redwood City into the existing pump station
- Coarse bar racks to remove rags and other large objects
- Six 100 HP pumps that discharge to a 42-inch lined, welded steel pipe manifold
- Existing 48-inch reinforced concrete force main that convey flows to the WWTP
- Existing 30-inch welded steel pipe exiting the pump station and associated flow meter vault
- Existing 33-inch welded steel pipe force main and associated junction structure
- Sodium hypochlorite dosing system and soil bed scrubber for odor control
- Existing PG&E transformer located at the northeast corner of the existing site
- Fuel storage tank on south side of existing RCPS building
- Electrical equipment and engine generator

The majority of the RCPS equipment and piping will be removed or abandoned in place. The RCPS building will remain in place and be repurposed to house the standby power equipment, odor control facilities, and other ancillary items needed for the long term operation of RCPS.

5.6.1.2 Constraints

The following constraints have been identified for the design and construction of RCPS. Constraints include the relocation and connection of utilities, noise and vibration restrictions and sequencing restrictions.

- **Existing PG&E transformer.** The existing PG&E pad mounted transformer located at northeast corner of existing site is in conflict with new utilities. The PG&E transformer will have to be replaced and relocated to accommodate the increased electrical demand and layout of the new RCPS. Coordination with PG&E will be required to identify the location for the new transformer.
- **Existing PG&E power lines.** Contractor/SVCW should request PG&E to install temporary insulators on wires located along the west fence line for safety during construction.
- **New electrical equipment and wet well facilities.** The electrical equipment and wet well facilities will need to be completed at the same time. The electrical equipment will be housed on the ground floor of the RCPS building.
- **Noise restrictions.** Construction noise will be limited to normal working hours between the hours of 7 a.m. and 8 p.m. Monday through Friday and prohibited on weekends and holidays. Per the Redwood City Noise Ordinance, Municipal Code Chapter 24 “Noise Regulation,” no individual piece of machinery, equipment, or devices will produce a sound in excess of 110 dBA measured 25 feet from such machinery, equipment, or device. Also, work noise level at any point outside of the construction site property plane should not exceed 110 dBA. Weekend and holiday work may be needed to complete installation of key components of each pump station and should be coordinated with Redwood City.
- **Vibration restrictions.** Redwood City has no known quantitative standards for vibration; therefore, American Association of State Highway and Transportation Officials (AASHTO) and State of California Department of Transportation (Caltrans) guidelines should be followed. Sheet pile driving and soil compaction will be the major sources of on-going vibration during construction. Vibration from the excavation and other phases of construction should be below the typical criteria for building threshold damage for nearby buildings located offsite. Since RCPS, is located within an area of Very High Susceptibility to liquefaction, operations from continuous vibratory equipment like a sheet pile driver should be limited to 0.1 peak ground acceleration (0.2 in/sec at 30 Hertz) near the existing RCPS building if differential settlement cannot be tolerated. In addition to vibration effects on buildings, RCPS construction will likely generate perceptible vibration that can be noticed by occupants of the nearby RSPD. Advanced outreach and communication with building occupants is recommended.

5.6.1.3 Geotechnical requirements

The following geotechnical recommendations were made by the geotechnical engineer for RCPS.

- **Groundwater.** Groundwater was encountered at 14.5 feet below the surface in the predesign boring performed at RCPS. Per the geotechnical report, the groundwater level should be assumed to be at ground surface for design and construction purposes.
- **Shoring.** Excavations on RCPS will be approximately 0.5 ft to 35 ft deep. All RCPS Project excavations will require vertical shoring (i.e., no side-sloped excavations) and supported with “watertight” shoring such as internally braced interlocking sheet piles. All gaps in shoring, such as pipeline penetrations, must be fully sealed to maintain a watertight system. External dewatering is not recommended by the geotechnical engineer due to the risk for subsidence of

soft ground and settlement of nearby pipelines, utilities and structures. Instead, the geotechnical engineer recommends that the sheet pile toe be embedded a minimum of 15 ft below the excavation to form a cutoff to groundwater inflows. Internal dewatering may be used to keep the excavation dry.

- **Differential and structure settlement.** Soil conditions at or below the base elevation of RCPS consists of stiff (Old Bay Clay) clays that will adequately support uniformly loaded mat foundations. Pile foundations are not required for RCPS's structures. RCPS mat foundation settlement should be limited to less than one inch. For structures lower than the wet well excavation, Class 2 aggregate base and foundation rocks will be installed per the geotechnical engineer's recommendations.

5.6.1.4 Coordination issues

The following coordination issues have been identified for the detailed design and construction of RCPS.

- **Installation of new 60-inch gravity sewer and junction structure.** A new 60-inch, gravity sewer will be installed by the City along Maple Street parallel to the new 48-inch force main. This new gravity sewer will be built to increase the capacity of the Redwood City collection system. A new junction structure will be built to intercept the existing 48-inch gravity sewer line that conveys flow into the RCPS from Redwood City. A new manhole will be built on the 60-inch gravity sewer north of the existing RCPS connection point for future connection to RCPS. The location of the RCPS gravity sewer connection point and provisions for transitioning the flow from the existing RCPS to the new RCPS will need to be coordinated with the 60-inch gravity sewer designer.
- **Connection to the new 48-inch force main.** RCPS will be connected to the force main downstream of Station 11+33 of the Segment 2 force main project. A tee, 48-inch gate valve, and blind flange were installed by the Segment 2 contractor to accept the connecting portion of the force main from RCPS. RCPS will connect upstream of this new connection point installed by the Segment 2 contractor.
- **PG&E.** Construction of the new RCPS includes an upgraded electrical service with a new transformer. Coordination will be required with PG&E and the Redwood City police station for the installation of the new electrical service, as well as the transfer from the existing to new electrical services.
- **Transition from existing pump station to new RCPS.** This transition can be completed in a straight-forward manner, since the new RCPS facilities will be constructed to allow concurrent operation of the existing pump station. There are two separate connection points in the gravity sewer to convey flow into the existing pump station and new RCPS. Also, there will be two separate connection points within Segment 2 to receive flow from the existing pump station and new RCPS. The two pump stations can operate, briefly during dry weather flows in parallel to allow the transition to be completed.
- **RCPD** An access point from the east side of RCPS is planned that requires travel through the RCPD parking lot. RCPD coordination will be required to maintain access to their facilities and discuss any limitations. In addition, some construction activities may generate perceptible vibration that may affect the RCPD occupants. Advanced outreach and communication is recommended.
- **Reclaimed water connection.** As part of the Segment 2 force main improvements, a new reclaimed water hydrant was installed at the end of Maple Street. A connection to this reclaimed water line will be required to supply reclaimed water for construction and RCPS daily activities.

- **Docktown and Peninsula Yacht Club.** Construction of RCPS may impact access to patrons of Docktown and the Peninsula Yacht Club located north of the RCPS site. The contractor will maintain access on Maple Street or designate an alternative route for these patrons.
- **Construction staging areas.** Several areas have been identified as possible staging areas for RCPS construction. There is a potential for City development of staging areas, including the possible conversion of Maple Street to a through street prior to construction of the RCPS. Future development of identified staging areas will be coordinated with Redwood City and any private developers during subsequent design.

5.6.1.5 Shutdowns

Two major shutdowns will be required to transition from the existing RCPS to the new RCPS. The shutdowns are as follows:

- **RCPS electrical system.** The RCPS electrical system will need to be shut down twice to install a new transformer onsite and to transition service from the existing RCPS to the new RCPS.
  - New Transformer. The shutdown will not occur during peak flow periods. The old transformer cannot be removed and taken out of service until the new transformer is operable.
  - Transitioning service from the existing pump station to RCPS. The shutdown while transitioning service from the existing pump station to the new RCPS will not occur during peak flow periods. The existing pump station electrical system will not be shutdown unless the temporary power to the new RCPS is connected and the new RCPS is fully operating.
- **RCPS.** RCPS will be shut down while transitioning service from the existing pump station to the new RCPS and the total time that both pump stations will be out of service will not be longer than four to six hours in duration. The shutdown of RCPS will take place during dry weather conditions and not during peak flow periods. RCPS will not be shut down until the new RCPS pumps are commissioned and ready to be brought into service.

5.6.1.6 Construction staging, laydown areas and access

The locations of construction staging have not been finalized; however, five potential sites have been identified. Table 5-3 presents a description of the five potential sites. Figure 5-3 presents the location of the potential staging areas.

Table 5-3. RCPS staging and laydown areas

Parcel Name/Location	Area (ft^2)	Description
RCPS and Maple Street	12,570	• Located to the west of the existing RCPS. • Owned by Redwood City.
Dock Facility	29,300	• Located at 1525 Maple Street. • Currently a boat and recreational vehicle storage facility.
Docktown	55,940	• Located at 1469 Maple Street. • Currently a boat and recreational vehicle storage facility.
Car Dealership Lot	80,700	• Located at 1463 Maple Street. • Owned by Redwood City.
San Mateo County Women's Jail	127,000	• Located at 1383 Maple Street at the corner of Blomquist and Maple. • Owned by Redwood City. • Currently used for the County Jail staging area.

Figure 5-5. RCPS staging areas

The determination to use any of these sites will be dependent on the availability of the sites when construction of RCPS begins. Additionally, any future development of these sites either during or before construction of the RCPS will be considered when determining available staging areas. Coordination with the City of Redwood City will be required to identify any future developments on these five sites.

Access to the RCPS Project site will be from Maple Street, which connects to Blomquist Street, then Seaport Boulevard, and then out to US-101. Truck traffic would utilize accepted Redwood City truck routes into and out of the RCPS Project site. Actual haul routes may vary depending on the actual location of the staging area, the location of disposal sites for excavated materials removed from the site, and the location of materials coming onto the RCPS Project site.

5.6.2 Construction sequencing

The construction sequencing plan for RCPS is shown in Figure 5-6 through Figure 5-10 and consists of six phases. Table 5-4 presents the activity description or each construction phase followed by a description of activities occurring in each phase. The suggested construction sequencing plan is not intended to define the methods of construction, but to the assist SVCW and the contractor in identifying operational and practical constraints for the work described below. Sequencing workshops will be held during detailed design to develop a more detailed sequencing approach during construction.

Table 5-4. Summary of construction activity at the RCPS

Phase	Activity	Dependency Phase	Duration (Months)
1	Mobilization Shop drawings Fabrication and delivery	--	4
2	Demolish Biofilter Relocate Diesel Fuel Storage Transformer Relocation Prep Work	1	2
3	Transformer and Power Pole Relocation Dewatering Construction and Operation Install Shoring System Complete Concrete Work Install Mechanical Equipment	2	11
4	Demolish Lavatory, Storage, and Blower Room Install New Generator Remove Existing Generator Install New Electrical	2	8
5	Bypass Install Piping Install Surge Control Setup Temporary Odor Control Startup Pump Station	3	5
6	Demolish MCCs and Pumps Install Odor Control Final Punch List and Closeout	4	4

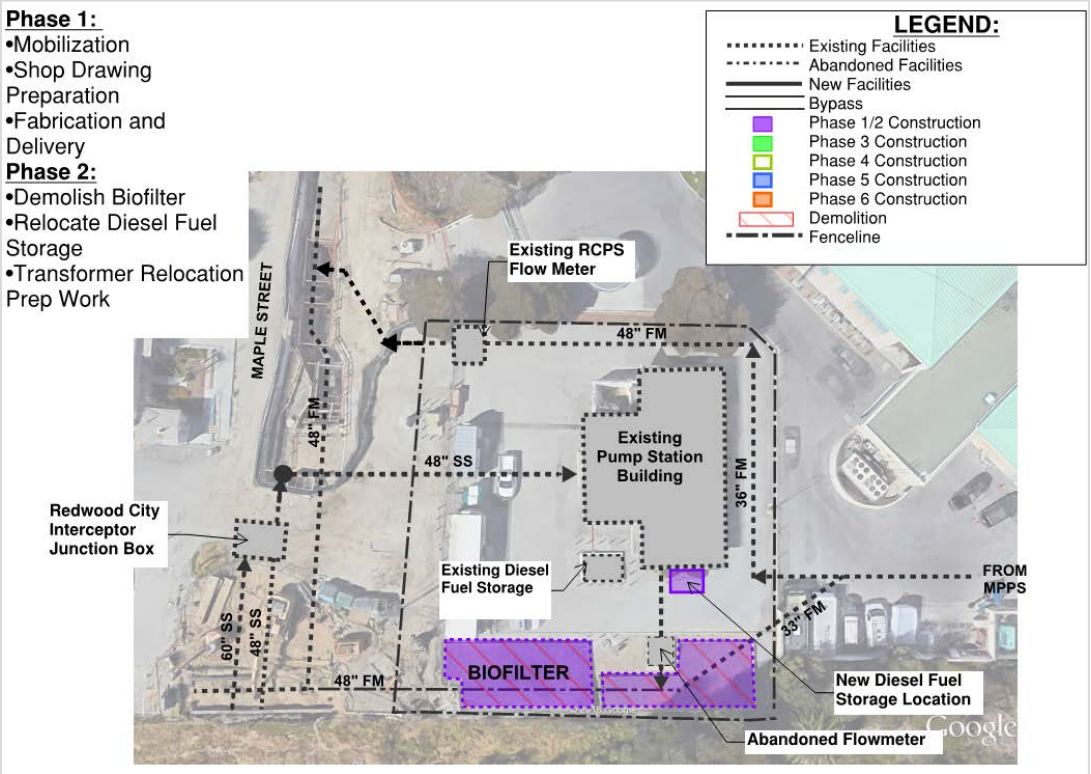

Figure 5-6. RCPS construction sequencing plan – Phase 1 and 2

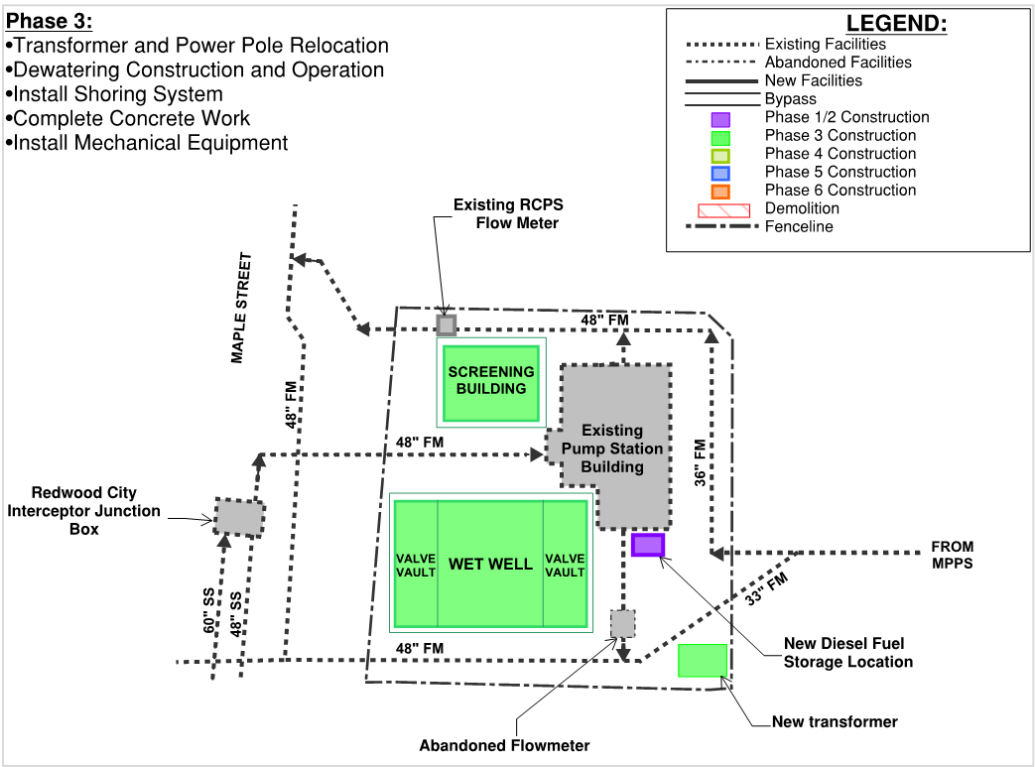

Figure 5-7. RCPS construction sequencing plan – Phase 3

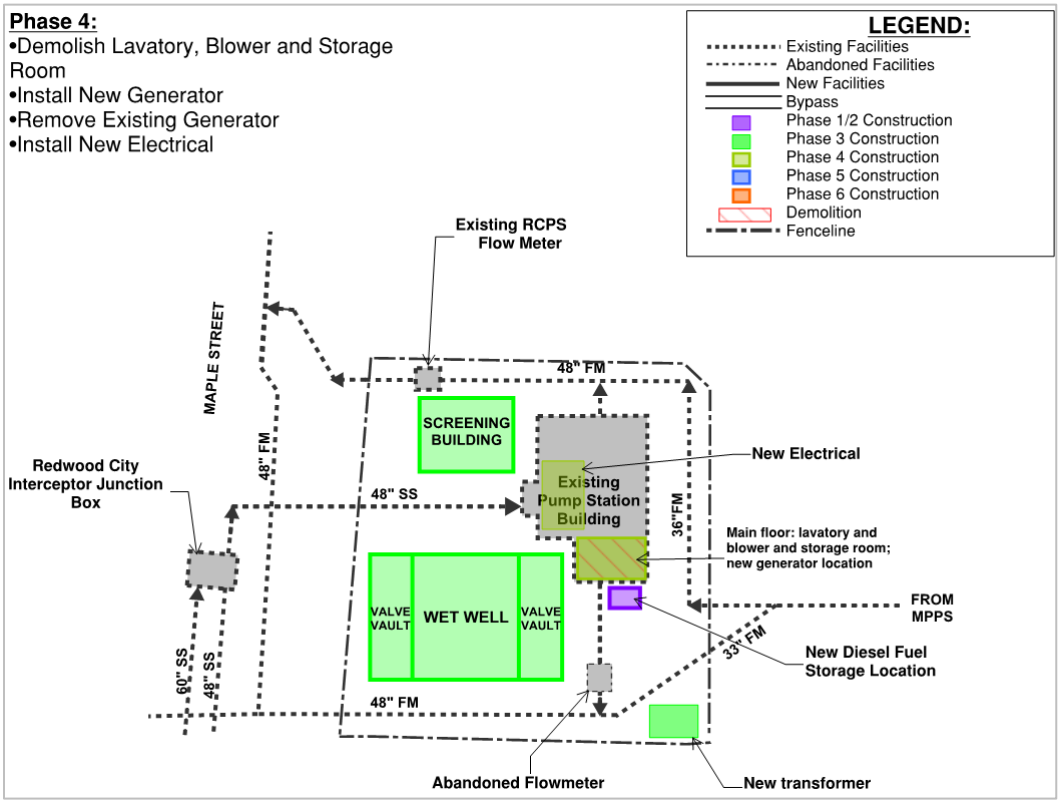

Figure 5-8. RCPS construction sequencing plan – Phase 4

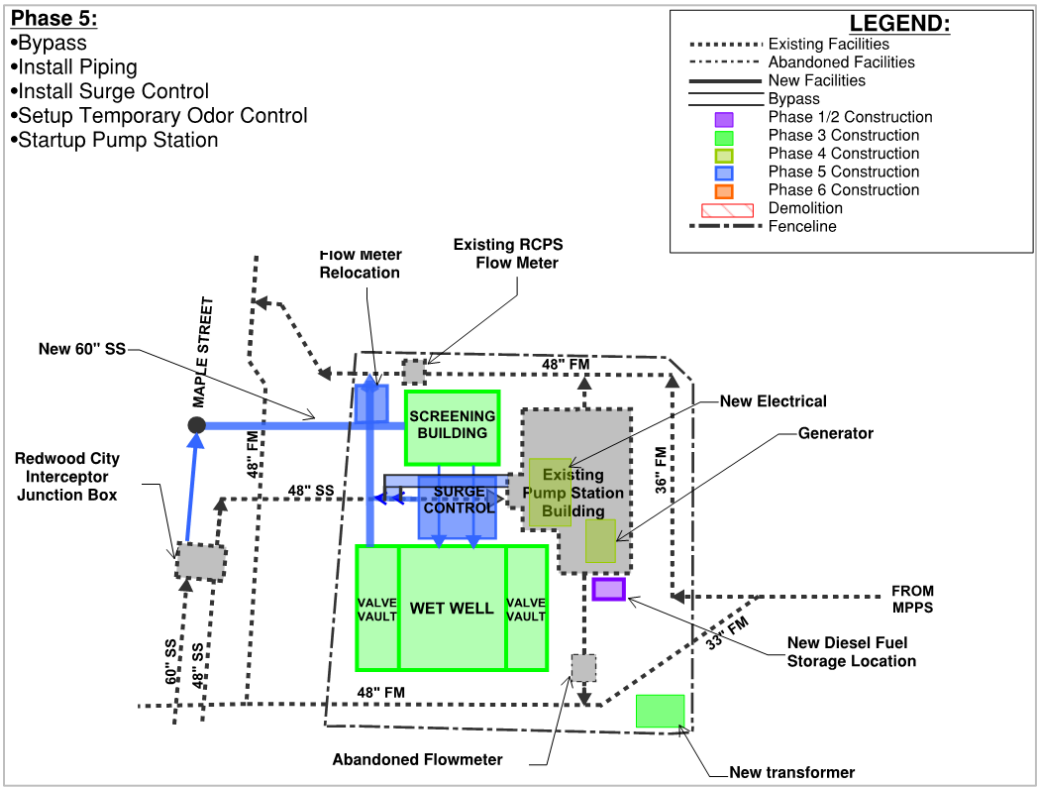

Figure 5-9. RCPS construction sequencing plan – Phase 5

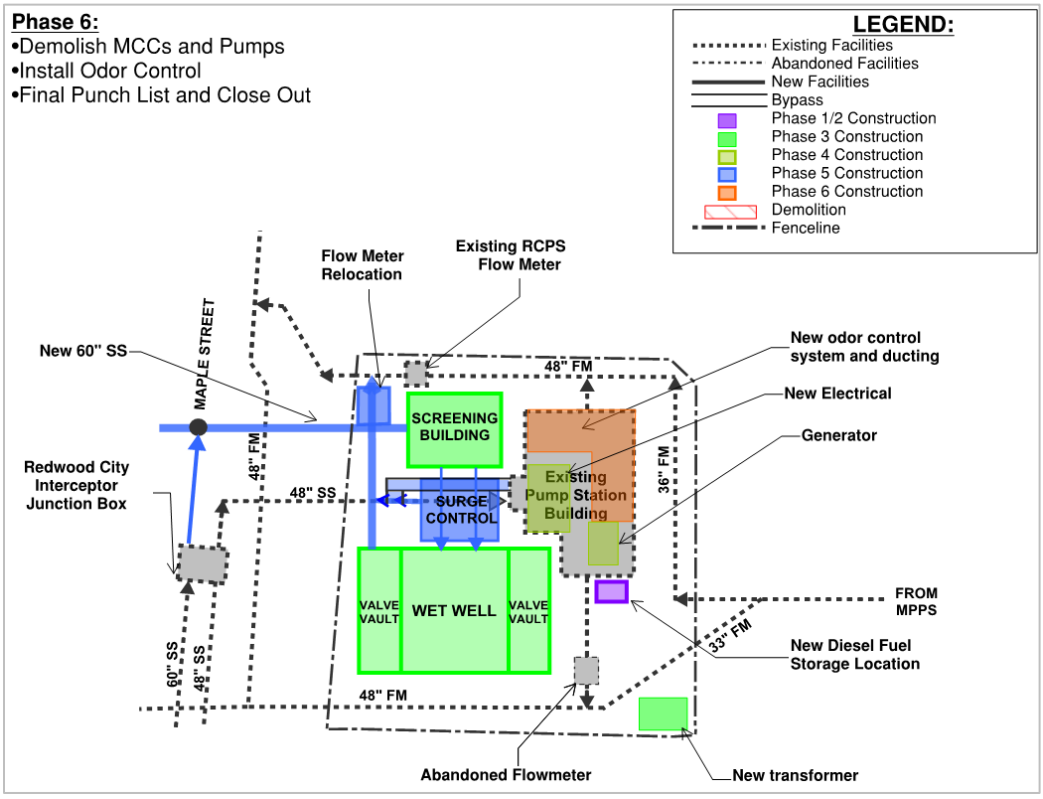

Figure 5-10. RCPS construction sequencing plan – Phase 6

This page intentionally left blank.

Section 6

Cost Estimate and Schedule

The RCPS Project Life Cycle Cost (LCC) analysis model was used to estimate the LCC over the RCPS Project's 50-year life. The model was completed in August 2016. The major considerations in developing the RCPS LCC include capital cost, annual O&M running costs, replacement/rehabilitation costs and proposed Conveyance System Project schedule. The following sections describe the different components of the LCC.

6.1 Construction and Capital Costs

AACE International Class 3 construction costs for the RCPS improvements were calculated by BC. A summary of the construction costs by major project category is provided in Table 6-1. The detailed cost estimate is included in Appendix G. It should be noted that the estimate was prepared in May 2016, and the construction cost estimate is in 2016 dollars.

Table 6-1. RCPS construction cost

Category/Phase	Total Net Cost
RCPS Site Work	$3.1M
Redwood City Wet Well	$5.9M
Redwood Screening Building	$2.8M
Redwood Surge Control	$0.7M
Redwood MPPS Connection	$0.3M
Redwood Odor/Chemical System Control Allowance	$0.2M
Redwood Electrical and Instrumentation	$5.0M
Total	$19.6M

Note: *Construction cost estimate is in 2016 dollars.*

The construction costs were converted into capital costs by applying soft costs, project contingencies, and market fluctuations to each individual cost component.

The construction contingencies, soft costs, and market fluctuations are summarized in Table 6-2. Market fluctuations are applied to capture the range of costs that could potentially occur over the construction period for the entire conveyance system program upgrade.

Table 6-2. Capital cost factors	
Cost Factor	Markup
Construction Contingency[1]	25%
Soft Costs[1]	
Construction Management, Engineering Services during Construction, Testing, Inspection	18%
Contract Change Orders (CCO)	5%
Planning	5%
Design	10%
Project Management	5%
Soft Cost Subtotal	**43%**
Market Fluctuations[2]	
Low	-5%
High	15%

1. *Construction contingency developed by SVCW as presented in the comparison of construction cost estimates during the June 2, 2016 Department Head Meeting.*
2. *Market fluctuations developed by SVCW. Source: SVCW Conveyance System Construction Cost Analysis, Front of Plant, Revision Date: April 22, 2015, Revision 28b.*

Table 6-3 presents a summary of the RCPS capital costs. The capital costs were originally developed in 2016 dollars, but were escalated to 2021, which is the midpoint year of construction.

Table 6-3. RCPS capital cost	
	Total Net Cost
Total Construction Cost	$19.6M
Contingency and Soft Cost Subtotal (25% and 43% of Construction Cost)	$4.9 M $8.4M
2016 Capital Cost	$32.9M
2021	$40.0M
Market Fluctuation Ranges[1]	$38.8M - $43.6M

Source: *SVCW Conveyance System Construction Cost Analysis, Front of Plant, Revision Date: April 22, 2015, Revision 28b.*

Market fluctuation range of -5 percent (low) to 15 percent (high) developed by SVCW.

6.2 O&M Costs

The annual maintenance allowance is equal to one full time employee at $150,000/year per SVCW's direction during the original LCC analysis completed in May 2015. The maintenance allowance includes the maintenance of the odor control, screens, standby generator and combination air vacuum/relief valves/surge control and pump maintenance. Odor control chemicals and pump rebuilding and inspection are not considered to be annual maintenance costs, and are accounted for separately in the LCC analysis. Odor control chemical and pump rebuilding costs are estimated to be $95,000/year due to the size of the facility. Pump inspection costs are estimated to be

$33,600/year, based on pulling all submersible pumps twice per year at a cost of $4,200/pump/year as stated in Table 7.19 of Conveyance System Master Plan (Winzler and Kelly, 2011). Electrical costs are calculated using the location of the facility and the electrical rates, along with calculated equipment power usage. The electrical rate is $0.150/kWh based on current SVCW electrical bills for RCPS. The total RCPS annual equipment power usage is 655,978kW (74.6 kWh). All O&M costs mentioned above are in 2016 dollars.

6.3 Rehabilitation/ Replacement Costs

The following rehabilitation and replacement assumptions were made for RCPS:

1. Dry weather submersible pump rebuild is once every 5 years at 50 percent of a purchase cost of $875,000 for all four dry weather pumps based on vendor supplied costs.
2. Wet weather submersible pump rebuild – once every 10 years at 50 percent of a purchase cost of $1,472,000 for all wet dry weather pumps based on vendor supplied costs.
3. RCPS Screen Replacement – once every 20 years at a cost of $819,000.
4. Pump replacement – once every 25 years for both dry and wet weather pumps. The cost to replace is assumed to be a purchase cost of $2,347,000 for all eight pumps. No rebuild costs are assumed within these years.
5. Electrical equipment will be replaced once every 25 years and instrumentation and control once every 15 years. Electrical equipment replacement cost is assumed to be $4,471,000 and the instrumentation and control equipment replacement cost is assumed to be $496,800.
6. Structural rehabilitation or replacement will occur once every 50 years for RCPS since it will be a new station and the existing building will be repurposed for ancillary equipment. Since this cost will occur outside of the period of analysis, it was not calculated for this LCC. The structural rehabilitation/replacement includes piping, valves, HVAC, and odor control.

6.4 Year of Analysis

The RCPS Project construction is expected to begin in November 2020 and end in November 2022. Capital costs are applied in the LCC model at the midpoint year of construction. The Year 2021 is used as the midpoint year of construction. The end year of construction is used to establish the start of recurring O&M and rehabilitation/replacement costs. The Year of Analysis for the entire conveyance system program is the Year of Beneficial Use. The Year of Beneficial Use is the year major facilities of the conveyance system (i.e., gravity pipeline, RLS and Head-works) start up. Based on the current program-wide schedule (Version 20 dated February 1, 2017) developed by SVCW, the Year of Beneficial Use is the Year 2022.

6.5 Escalation and Discount Rates

To determine the present value of costs for the Year of Analysis, their values are escalated to future values and discounted back to the Year of Analysis. The discount and escalation rates used in the RCPS Project LCC Analysis were developed by SVCW based on current and projected investment return rates as summarized in Table 6-4.

Table 6-4. Escalation and discount rates	
Factor	Rate
Escalation	4%
Capital Project and Rehabilitation/Replacement Discount	7%
O&M Discount	3%

6.6 LCC Analysis Summary

The LCC analysis summarizes all cost components over a 50-Year period ending in the Year 2066. A 50-Year period was selected as it the typical analysis period for municipal facilities. Table 6-5 displays the RCPS LCC breakdown including O&M, rehabilitation/replacement, capital and life cycle costs. The LCC analysis completed for the RCPS is included in Appendix H.

Table 6-5. LCC summary by cost category	
Cost Category	Cost
O&M	$14.8M
Rehabilitation/Replacement	$8.9M
Capital Cost	$38.8M - $43.6M
Total LCC	$62.5M - $67.3M

Note: Capital cost range is based on a market fluctuation factor as discussed in Section 6.1.

The median total 50-year LCC for RCPS is $63.7 million with a range of $62.5 to $67.3 million accounting for market fluctuations

6.7 Schedule

A planning level project schedule during design and construction is shown in Figure 6-1. The estimated construction duration for the RCPS Project is approximately two years. The schedule originates from the overall program schedule; therefore, gaps in specific RCPS activity may occur.

Task Name	Duration	Start	Finish	Predecessors
RCPS Project Schedule	**1742 days**	**Tue 11/29/16**	**Wed 8/2/23**	
Final EIR Preparation	**114 days**	**Tue 11/29/16**	**Fri 5/5/17**	
Public Review Period for Draft EIR	34 days	Tue 11/29/16	Fri 1/13/17	
Commission Certifies EIR and Approves Project	0 days	Fri 4/14/17	Fri 4/14/17	3
EIR Amendments	69 days	Thu 10/15/20	Tue 1/19/21	
RCPS Easements Acquisition	113 days	Wed 7/3/19	Fri 12/6/19	
Permitting	1408 days	Fri 8/28/15	Tue 1/19/21	
Environmental, Acquisition, Permitting Complete	0 days	Wed 1/20/21	Wed 1/20/21	7
RCPS Non-Environmental Approval, Permit or Coordination	270 days	Mon 11/26/18	Fri 12/6/19	
Project Planning Report	83 days	Mon 11/28/16	Wed 3/22/17	
RCPS Predesign, 30%	174 days	Tue 4/18/17	Fri 12/15/17	
RCPS 90% Design	181 days	Mon 12/18/17	Mon 8/27/18	11
RCPS Final Design	135 days	Tue 8/28/18	Mon 3/4/19	12
Bid and Award	90 days	Tue 3/5/19	Mon 7/8/19	13
Construction	**735 days**	**Mon 4/13/20**	**Fri 2/3/23**	**14**
Submittals, Fabrication, Testing	204 days	Mon 4/13/20	Thu 1/21/21	
RCPS Construction	531 days	Fri 1/22/21	Fri 2/3/23	
RCPS Replacement Complete	0 days	Fri 2/3/23	Fri 2/3/23	

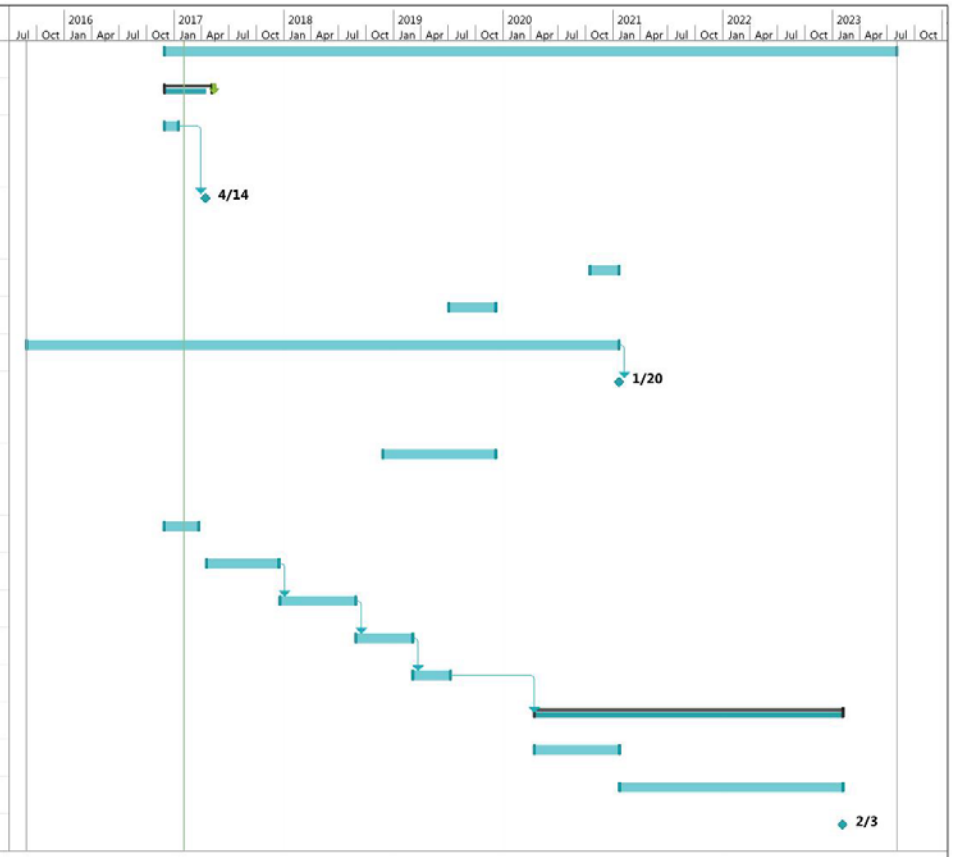

Project: RCPS Replacement
Date: Thu 2/2/17

Task | Split | Milestone | Summary | Project Summary | Inactive Task | Inactive Milestone | Inactive Summary | Manual Task | Duration-only | Manual Summary Rollup | Manual Summary | Start-only | Finish-only | External Tasks | External Milestone | Deadline | Progress | Manual Progress

\\bcwckfp01\projects\150000\150072- RCPS - Project Planning Report\Project Schedule\150072_RCPS Project Schedule.mpp

Figure 6-1. Construction schedule

This page intentionally left blank.

Section 7

Outstanding Project Issues

The following section summarizes the RCPS Project issues that require resolution as part of the final design process. These issues consider the impact to the RCPS Project schedule and overall RCPS Project costs (design and construction), potential additional field investigations, RCPS Project components requiring alternatives analyses to determine a final resolution, interproject coordination needs and decisions to be made by SVCW staff/management to move the RCPS Project forward.

7.1 Outstanding Issues to Carry into Subsequent Design

Several items will need further refinement and coordination with SVCW. These items are listed below.

- **Hydraulic model and pump selection.** Original pump selections were made from the hydraulic model as part of the predesign report (BC, January 2015). Following the selection of the proposed Conveyance System Project, new pump selections were made based on information available in January 2017. As new information is developed, the hydraulic model will need to be updated and new system curves developed. The consultant updating the hydraulic model during final design will need to provide system curves for the detailed design team to finalize pump selection. As part of final pump selection, the Segment 1 pressure and associated flow rate for which double pumping is required will be refined.
- **Hydraulic transient control.** A hydraulic transient model was developed based on the information available at the time of the original predesign report (BC, January 2015) assuming a force main project. The proposed Conveyance System Project has changed since then, and based on the selection of the proposed gravity pipeline project and new information that will be developed, the hydraulic transient model will need to be updated. The consultant responsible for hydraulics will update the hydraulic transient model as new information is developed and provide the results to the detailed design teams.
- **Wet well dimensions.** Updated pump selections may require adjustments in the wet well dimensions.
- **Pump manufacturers.** Current pump selections were based on Vaughan submersible chopper pumps for dry weather and Flygt submersible pumps for wet weather. Additional pump manufacturers should be contacted during final design.
- **Equipment removal and maintenance access.** Equipment removal and maintenance access to the pumps and equipment will need to be reviewed with SVCW O&M staff. The use of portable gantry cranes, bridge cranes, boom trucks, or combination of removal devices will need to be considered. Redwood City's and neighboring businesses' interests should also be considered.
- **Bar screen hydraulics.** The hydraulics for the bar screen were based on 19 mgd per bar screen channel. The hydraulic requirements for 38 mgd per bar screen channel and its impact to facility sizing should be evaluated. Facility sizing will also affect overall site layout.
- **Odor control.** Odor control field testing should be conducted in August/September timeframe to confirm odor control predesign assumptions. The odor control sizing should be updated as needed based on the new field data.

- **Air exchange rates.** Air exchange rates for the wet well and screen building need to be finalized during final design. Currently, the screen building air exchange rates are based on continuous occupancy. The screen building air exchange rates may be reduced when the screen building is unoccupied.
- **Architectural.** The existing buildings will be repurposed to house new electrical equipment, standby generators, odor control equipment, control room, and restroom as part of the pump station upgrades. The buildings will be updated with architectural features to match the surrounding area. The final architectural features will need to be determined in final design. Redwood City's interests will need to be considered.
- **Alignment and grade of incoming 60-inch gravity sewer to RCPS.** The alignment and grade of the City's incoming 60-inch gravity sewer will affect the depth and sizing of facilities on the site, especially the wet well.
- **SVCW design standards.** Updates to SVCW design standards, including automation standards and naming conventions, will need to be incorporated into the detailed design. The detailed design teams will need to update the design documents to meet all of the new/updated design standards.
- **Inner Harbor Redevelopment Plan.** Redwood City has plans to redevelop the Inner Harbor area, formerly under the IHSP and now under the Redwood City General Plan. There are two proposed private developments and plans for public facilities and open spaces. Development in the Inner Harbor Area and in the vicinity of the RCPS may occur in parallel with the RCPS design and construction. Improvements to the RCPS area will need to consider improvements in the area.
- **Environmental.** The Draft EIR released in November 2016 identified significant proposed Conveyance System Project impacts and proposed mitigation measures, which will need to be incorporated into the design of the RCPS. Specific attention to air quality impacts, biological resources, and cultural resources will be considered, in addition to the other impacts discussed in the EIR and summarized in this report.
- **SRF.** SVCW plans to fund the pump stations through the SRF program. SRF requirements will need to be incorporated into the bid documents. The design engineer should also expect to provide RCPS Project information for the SRF application.
- **Environmental permits.** No environmental permits are required for construction.
- **Non-environmental permits.** Non-environmental permits required for construction will need to be identified and finalized during detailed design.
- **Land acquisition**. Land acquisition for laydown areas and temporary construction easements will need to be identified and acquired during final design. Progress of planned developments near the RCPS must be considered when selecting the areas for land acquisition. Land that is currently identified as available may not be available at the time of construction.
- **Bidding and construction**
  - Project schedule – The proposed Conveyance System Project schedule will need to be updated as design progresses.
  - Construction sequencing – The construction sequencing will need to be updated as the design develops and more information is obtained. Challenges due to construction sequencing include staging at the end of Maple St, providing access to neighboring facilities, and the overall size of the site. The construction sequencing will also need to be coordinated with the other projects ongoing for SVCW, especially other conveyance system projects and the Member Agencies.

  - Construction staging – Construction staging locations will need to be finalized based on the environmental reviews and the results of the land acquisition efforts. Due to the ongoing improvements in the area, as discussed in Section 2.2.1, the construction staging and laydown area availability may be subject to change and may be problematic. Careful and close coordination with the City of Redwood City will be required to identify the timing and availability of surrounding properties for staging areas.
  - WWTP and pump station shutdowns – Shutdowns will need to be identified and coordinated with the O&M staff.
- **Technical specifications.** Technical specifications for the RCPS Project will be developed during final design.

In addition to the items listed above, the following additional assessment, investigations and studies are recommended.

- **Geotechnical.** For final design of RCPS, a minimum of two Cone Penetrometer Tests (CPT) to depths of 75 to 100 feet or refusal are recommended to generate a continuous soil profile and serve as the basis for liquefaction settlement analysis. Pore pressure dissipation tests should be performed at all sand layers encountered to evaluate artesian groundwater pressures, if present. The CPT profile/data and seismic setting can then be entered into the computer program LiquefyPro (or equivalent) to evaluate individual sand layers that are likely to liquefy and to estimate the resultant seismic settlement (if any) at the ground surface and at the base of the pump station.
- **Seismic retrofit evaluation.** A seismic analysis for RCPS was completed by Kennedy/Jenks approximately eight years ago. This analysis will require updates for RCPS, where the building will be repurposed, to reflect the new California Building Code seismic requirements and any changes in the pump station conditions.

This page intentionally left blank.

Section 8

Limitations

This document was prepared solely for Silicon Valley Clean Water (SVCW) in accordance with professional standards at the time the services were performed and in accordance with the contract between SVCW and Brown and Caldwell dated December 20, 2016. This document is governed by the specific scope of work authorized by SVCW; it is not intended to be relied upon by any other party except for regulatory authorities contemplated by the scope of work.

Further, Brown and Caldwell makes no warranties, express or implied, with respect to this document, except for those, if any, contained in the agreement pursuant to which the document was prepared.

All data, drawings, documents, or information contained this report have been prepared exclusively for the person or entity to whom it was addressed and may not be relied upon by any other person or entity without the prior written consent of Brown and Caldwell unless otherwise provided by the Agreement pursuant to which these services were provided.

This page intentionally left blank.

Section 9

References

American Society of Civil Engineers (ASCE). *Failure to Act: The Economic Impact of Current Investment Trends in Water and Wastewater Treatment*, ASCE, 2011.

Brown and Caldwell, *South Bayside System Authority, Final Capacity Analysis TM,* May 7, 2013.

Brown and Caldwell, *South Bayside System Authority, Pump Station Predesign Project – CIP NO. 7010, TM 6.1 – Hydraulic Evaluation,* September 20, 2013.

Brown and Caldwell, *South Bayside System Authority, Pump Station Predesign Project, TM 3.1 – Field Investigation Summary,* September 17, 2013.

Brown and Caldwell, *South Bayside System Authority, Pump Station Predesign Report, TM 8.1 – Design Criteria, Guidelines, and Standards, January 12, 2015.*

Brown and Caldwell, *Admin Draft Conveyance System Pump Station Predesign Report,* May 2014.

Brown and Caldwell, *Draft Conveyance System Pump Station Predesign Report,* January 2015.

Cornerstone Earth Group, *Screening Leven Phase I Environmental Site Assessment, Silicon Valley Clean Water Conveyance and Treatment Reliability Improvement Project, Belmont, San Carlos, Redwood City and Menlo Park, CA.* May 13, 2016.

DCM Consulting, Inc., *Draft Predesign Geotechnical Interpretive Report (GIR).* November 25, 2013.

Jacobs Associates. *South Bayside System Authority Pre-design of Planned Pump Stations Redwood City, San Carlos, and Menlo Park, California, Geotechnical Data Report,* October 22, 2013

Kennedy/Jenks Consultants, *Redwood City Pump Station 48-inch FM Emergency Repairs,* January 2016.

MIG, Inc., *Redwood City Inner Harbor Public Draft Specific Plan*, City of Redwood City, 2015, 202 pp.

Silicon Valley Clean Water, *Draft Environmental Impact Report – Silicon Valley Clean Water Wastewater Conveyance System and Treatment Plant Reliability Improvement Project*, CIP No. 6006, State Clearinghouse Number #SCH 2016022055, 2016.

V&A Consulting Engineers, Inc., *South Bayside System Authority Lift Station Soils Corrosivity Investigation,* January 8, 2014.

Water Environment Foundation (WEF), *Design of Wastewater Treatment Plants, Volume 1: Planning and Configuration of Wastewater Treatment Plants,* September 1, 2012.

Whitley Burchett & Associates. *Alternatives Analysis used to select the Recommended Silicon Valley Clean Water Conveyance System Replacement Project Technical Memorandum*, August 30, 2016.

Winzler & Kelly. *Conveyance System Master Plan, South Bayside System Authority.* August 2011.

This page intentionally left blank.

Appendix A: TM 3.1 – Field Investigation Summary (Contaminated Materials Survey)

Brown and Caldwell, September 17, 2013

This page intentionally left blank.

201 North Civic Drive, Suite 115
Walnut Creek, California 94596
Tel: 925-937-9010
Fax: 925-937-9026

Technical Memorandum

Prepared for: South Bayside System Authority

Project Title: Pump Station Predesign Project

Project No.: 142399

Technical Memorandum No. 3.1

Subject: Task 03 – Field Investigation Summary

Date: September 17, 2013

To: Kim Hackett, Project Manager, South Bayside System Authority

From: Charles Joyce, Project Manager, Brown and Caldwell

Prepared by: _____
Alexandra Park, Senior Engineer
CA License No. C64117, Expiration 12/31/14
Engineer in Responsible Charge

Reviewed by: _____
Timothy N. Banyai
CA License No. C60715, Expiration 12/31/14

Section 1: Introduction

This technical memorandum (TM) 3.1 summarizes the Contaminated Materials Survey completed by Forensic Analytical at the South Bayside System Authority (SBSA) Menlo Park Pump Station (PS), Redwood City PS, San Carlos PS, and Belmont PS. The purpose of the survey was to identify, sample, and analyze all suspect asbestos-containing materials that may be disturbed in the planned pump station demolition and to identify lead containing materials at the sites. Materials outside of the planned renovation areas were not tested. The survey results will be used to identify the extent of contaminated materials, provide information for the firm developing the detailed design to include in the Bidding Documents and provide a more realistic estimate of construction cost for removal and disposal of contaminated materials.

Section 2: Contaminated Materials Survey

A pre-demolition asbestos survey and lead testing for the four SBSA pump stations was conducted on July 26, 2012 by Forensic Analytical. This section summarizes the results presented in the reports. These reports are included in Attachment A.

2.1 Contaminated Materials Found

Asbestos was found at two of the four pump stations, Menlo Park PS and San Carlos PS. Lead was found in certain paints at all four pump stations. The description and locations of asbestos and lead found at the pump stations are summarized in Table 2-1.

Table 2-1. Contaminated Materials Found at Pump Stations

Pump Station	Asbestos	Location Description	Lead	Location Description
Menlo Park	12" Beige Vinyl Tile Floor and Mastic	West Utility Room, Office, Entry, and Bathroom	4 out of 9 Paints Tested	See Floor Plan Sketch in Attachment A for Locations
Redwood City	None Detected	N/A	7 out of 11 Paints Tested	See Floor Plan Sketch in Attachment B for Locations
San Carlos	12" Beige Vinyl Tile Floor and Mastic	Surface Level, West Utility Area, Office, and Bathroom	6 out of 8 Paints Tested	See Floor Plan Sketch in Attachment C for Locations
Belmont	None Detected	N/A	5 out of 7 Paints Tested	See Floor Plan Sketch in Attachment D for Locations

Section 3: Hazardous Waste Inspection

A visual inspection for hazardous waste was conducted on October 29, 2012 by Forensic Analytical and is summarized in a report dated January 7, 2013. The report is included in Attachment E. The purpose of the inspection was to identify hazardous materials that may be encountered in the pump station demolition. The items found at each of the pump stations fall within one of three categories: suspect Polychlorinated biphenyl (PCB) containing waste, universal waste, and other hazardous waste materials. These items are summarized in Table 3-1.

Table 3-1. Hazardous Waste Inspection Summary for SBSA Pump Stations					
Category	Type	Waste Found at Pump Station (X)			
		Menlo Park PS	Redwood City PS	San Carlos PS	Belmont PS
Suspect PCB-Containing Waste	Electrical Switch Gear/Transformers (Wet Type)	X	X	X	X
	Fluorescent Light Fixture Ballasts	X	X	X	X
Universal Waste	Lead Acid Batteries	X	X	X	X
	Light Bulbs/Tubes	X	X	X	X
	Miscellaneous Chemicals and Cleaning Supplies	X	X	X	X
Other Hazardous Waste	Various Oils	X	X	X	X
	Oily Rags	X	X	X	X
	Diesel Fuel	X	X	X	X
	Generator (Oil, Fuel, Coolant)	X	X	X	X
	Sodium Hypochlorite		X	X	
	Bio Hazard Waste				X

Section 4: Recommendations

Recommendations were made for handling the contaminated and hazardous waste materials found at each of the pump station sites. The recommendations apply to all locations these materials are found on each site and are listed below.

4.1 Contaminated Material Recommendations

Recommendations were made for handling the asbestos and lead found at each of the pump station sites. The recommendations apply to all locations these materials are found on each site and are listed in Table 4-1.

Table 4-1. Contaminated Material Recommendations	
Asbestos Materials[1]	Remove prior to demolition by licensed asbestos abatement contractor.
	Consult Certified Asbestos Consultant to assist with project design and monitoring, including clearance inspection and air sampling after asbestos removal.
	If any additional suspect asbestos-containing material is discovered during the renovation, the work should stop, and the material should be tested.

Table 4-1. Contaminated Material Recommendations	
Lead Materials[2]	Work performed on surfaces containing any amount of lead must comply with the Cal/OSHA Lead in Construction Safety Standard (8 CCR 1532.1).
	Remove lead paint at spots scheduled for disturbance by the construction to eliminate the Cal/OSHA trigger task and worker protection and monitoring requirements. Otherwise, utilize Cal/OSHA standards for working around lead.
	Remove areas of lead containing paint where the paint is peeling or deteriorated prior to sending components for recycling or disposal and prior to demolition. The paint chips are likely classified as hazardous waste and will contaminate any waste at the site with which they are combined.
	Paint chips and other waste generated from paint removal as well as painted components destined for disposal, should be tested for lead. If the lead content is determined to be hazardous according to the applicable Federal and State regulations, the paint should be removed accordingly.

[1]12-inch square Beige Vinyl tile floor and Mastic found at Menlo Park PS and San Carlos PS

[2]Lead found in some of the paints at all four pump stations

4.2 Hazardous Waste Material Recommendations

The recommendation for the suspect PCB-containing waste is to sample the materials after energy isolation or to otherwise assume that they contain PCBs.

All regulated and hazardous waste items listed in Table 3-1 above should be properly packaged, labeled, transported and disposed of or recycled in accordance with all applicable federal, state and local regulations.

Attachment A: Pre-Demolition Asbestos Survey & Lead Testing Reports by Forensic Analytical

Menlo Park Pump Station, August 13, 2012

Forensic Analytical

ENVIRONMENTAL HEALTH CONSULTANTS

Pre-Demolition Asbestos Survey & Lead Testing Report

SBSA Menlo Park Pump Station
Marsh Road at Highway 101
Menlo Park, California

August 13, 2012

Prepared for:

Mr. Timothy Banyai
Brown and Caldwell
201 North Civic Center Drive, Suite 115
Walnut Creek, CA 94596
tbanyai@brwncald.com

Prepared by:

Wilson Wong
Forensic Analytical Consulting Services, Inc.
3777 Depot Road, Suite 413
Hayward, CA 94545
510-266-4600 ♦ wwong@forensicanalytical.com

FACS Project #PJ17441

Table of Contents

Executive Summary

Forensic Analytical Consulting Services, Inc. (FACS) performed a pre-demolition asbestos survey and lead testing at the SBSA San Carlos Pump Station on July 26, 2012. The purpose of the survey was to identify, sample, and analyze all suspect asbestos-containing materials that may be disturbed in the planned demolition.

The survey was intended to meet the requirements of the Bay Area Air Quality Management District. The results of this report should be incorporated into any demolition plans for the building.

Asbestos was identified in the following materials:

Material Description	Location(s) of Material
12-inch beige vinyl floor tile and black mastic	**West utility room, office, entry and bathroom**

Lead was detected in four (4) of the nine (9) paints tested, two of the paints were determined to be lead-based paint, while the other two were determined to be lead-containing paint.

Results of laboratory testing are summarized in the attached tables. The summary tables must not be used alone. Important explanations and limitations are contained in the full report text below.

Introduction

Forensic Analytical Consulting Services, Inc. (FACS) was retained by Mr. Timothy Banyai of Brown and Caldwell to perform a pre-demolition asbestos survey of the SBSA Menlo Park Pump Station located at Marsh Road at Highway 101 in Menlo Park, California. Peter Radzinski of FACS performed the investigation on July 26, 2012. Mr. Radzinski is certified by the State of California as a Certified Site Surveillance Technician (Cert. No. 05-3772). Project Management was provided by Mr. Paulo Parra a California Certified Asbestos Consultant (Cert. No 11-4806). Certifications of FACS personnel are presented in Appendix D.

This report contains the findings and recommendations from our inspection and laboratory analysis of samples collected. The purpose of the survey was to identify, sample, and analyze all suspect asbestos- and lead containing materials that may be disturbed in the planned demolition, within the limitations described below.

Site Description and Scope of Work

The Project building was a cinder block structure with rolled-on roof. The building was a pump station, and the interior was divided into east and west utility areas, with a surface level and two sub-levels at the west utility area and one sub-level at the east.

This survey was performed for the planned demolition of the pump station.

Methodology

Our investigation consisted of the following:

- Visual inspection
- Documentation of relevant conditions
- Collection of samples of suspect asbestos-containing materials using the AHERA sampling protocol
- Collection of samples of suspect lead paint
- Submitting samples to a laboratory accredited by AIHA, NVLAP, and ELAP for analysis by PLM & Flame AA
- Presenting analytical results, conclusions, and recommendations in a report, which can be submitted to the Bay Area Air Quality Management District.

The types, numbers, and locations of samples were determined based on information about the planned demolition, visual observations, regulatory requirements, and other project management considerations.

Findings

Survey results are summarized in the attached table (Appendix A).

Asbestos was identified in the following materials:

Material Description	Location(s) of Material	Asbestos Regulatory Classification
12-inch beige vinyl floor tile and mastic	**West utility room, office, entry and bathroom**	**Category I Nonfriable ACM**

Lead was detected in four (4) of the nine (9) paints tested. Paint testing results ranged from <0.008% to 24% lead by weight.

A floor plan showing sample locations is presented in Appendix B. The detailed laboratory report and completed Sampling Data Form (Chain of Custody) are contained in Appendix C.

Conclusions and Discussion

Asbestos

The 12-inch beige vinyl floor tile and mastic in the utility room, office, entry and bathroom contain asbestos. The vinyl floor tile and mastic are Asbestos-Containing Materials (ACM) and also Asbestos-Containing Construction Materials (>0.1% asbestos) in California. The vinyl floor tile and mastic are subject to regulations of USEPA, BAAQMD, Cal/OSHA, and CSLB.

An asbestos-containing material for which sample analysis results by PLM are greater than one percent asbestos is classified as Asbestos-Containing Material (ACM) under regulations promulgated by: : US EPA, BAAQMD, Cal-EPA, OSHA, and Cal/OSHA. US EPA and BAAQMD require that a material with a PLM analytical result less than 10% (including Trace results of less than one percent) be confirmed by the point count method, or else the material must be assumed to be ACM.

An asbestos-containing material for which sample analysis results by PLM are greater than 0.1 percent asbestos is classified as Asbestos-Containing Construction Material (ACCM) by Cal/OSHA and by the California Contractor State Licensing Board (CSLB).

OSHA (Cal/OSHA) regulates all materials that contain asbestos. At a minimum, employee training, wet methods, HEPA vacuums, and prompt cleanup and disposal of debris in leak-proof containers are recommended or required for the disturbance of any material that contains asbestos.

Lead

Lead is primarily regulated in California by Cal/OSHA and the California Department of Public Health. The current Cal/OSHA Lead in Construction Safety Standard (8 CCR 1532.1) regulation applies to all construction work where an employee may be occupationally exposed to lead. Therefore, work performed on surfaces (including manual demolition, scraping, welding, etc.) containing any amount of lead must comply with the standard, including an exposure assessment (personal air monitoring) to determine if the airborne lead exposure levels are within acceptable limits.

Since **lead was detected in some of the paint chip samples** collected (ranging from 0.008% to 24%), 8 CCR 1532.1 applies to any work that will disturb these lead-containing paints. Other components

represented by the positive lead samples in the Summary of Lead Testing Laboratory Results shall be considered to be lead-containing until proven otherwise.

For detailed regulatory requirements in specific situations, FACS should be consulted, or the applicable regulations should be examined

Recommendations

1. The vinyl floor tile and mastic should be removed prior to the planned demolition by a licensed asbestos abatement contractor who complies with all applicable regulations.

2. A Certified Asbestos Consultant should be consulted to assist with project design and monitoring, including clearance inspection and air sampling after asbestos removal.

3. If any additional suspect asbestos-containing material is discovered during the renovation, the work should stop, and the material should be tested for asbestos content.

4. Removal of the lead paint at spots scheduled for disturbance by the construction would eliminate the applicability of the Cal/OSHA standard to the paint. If the paint is not removed, and the work will involve a Cal/OSHA trigger task (such as torch cutting), workers must be protected during the initial exposure monitoring, per the Cal/OSHA Lead Standard requirements, as if they were exposed above the Permissible Exposure Limit, until actual exposures are determined. With torch cutting, for example, this includes providing supplied air respiratory protection during the initial exposure assessment.

5. Because some of the paint present is peeling or deteriorated, these areas of paint should be removed from components prior to sending components for recycling or disposal. The paint chips are likely to be classified as hazardous waste for lead, whereas the components with the remaining intact paint may possibly test as non-hazardous. Scraping of loose and flaky paint prior to removal/demolition of the components is intended to prevent loose paint chips from contaminating the larger quantity of components and causing the larger load of waste to be classified as hazardous, and also intended to prevent paint chips from dislodging and contaminating the ground at the site or along the waste/recycling transportation route.

6. Paint chips and other waste generated from the paint removal, as well as painted components destined for disposal, should be tested to determine if it is hazardous waste. For reference, lead waste is considered a hazardous waste if the result of the Toxicity Characterization Leaching Procedure (TCLP) test exceeds 5 mg/liter, under the Resource Conservation and Recovery Act (RCRA), 40 CFR 261, Appendix II. In California, a waste is also considered hazardous if the result of soluble lead content by a Waste Extraction Test (WET) is greater than 5 mg/l, or if the total lead content exceeds 1,000 mg/kg in accordance with Title 22 of the CCR. When TTLC results are below 50 mg/kg, STLC/TCLP limits cannot be exceeded, so the waste would be classified as non-hazardous for lead. Other hazardous metals historically utilized in paint manufacture should also be tested to determine hazardous waste classification.

7. For further assistance with regulatory requirements, FACS should be consulted, and the applicable regulations should be reviewed.

Limitations

The results of this asbestos survey and lead testing do not apply beyond the planned renovation described above. Construction materials in areas not included in the scope of this survey should be assumed to be asbestos-containing materials / lead paint, unless testing is conducted which determines otherwise. If revisions to the renovation project are made that impact additional materials or areas, FACS should be contacted to review the changes and/or to conduct additional asbestos survey work to address potential impacts to untested materials.

The scope of this asbestos survey and lead testing did not include the identification of other hazardous materials, which might exist in the area of the planned renovation. Other hazardous materials may include polychlorinated biphenyls (PCBs) in fluorescent light ballasts and caulking, lead in paint, and mercury in light fixtures and switches.

This investigation is limited to the conditions and practices observed and information made available to FACS. The methods, conclusions, and recommendations provided are based on FACS' judgment and experience and on the standard of practice for professional service. They are subject to the limitations and variability inherent in the methodology employed. As with all environmental investigations, this investigation is limited to the defined scope and does not purport to set forth all hazards, nor to indicate that other hazards do not exist.

Please do not hesitate to contact our office at 510-266-4600 if you have any questions about our report. Thank you for the opportunity to assist Brown and Caldwell in promoting a more healthful environment.

Respectfully,
Forensic Analytical Consulting Services

Wilson Wong
Program Manager
CAC 92-0791, CDPH 4401

Reviewed by:
Forensic Analytical Consulting Services

Steve Jackson
Director of Consulting
CAC 95-1782

Appendix A:

Asbestos Survey & Lead Testing Results Summary Table

PRE-RENOVATION ASBESTOS SURVEY SUMMARY

SBSA Menlo Park Pump Station

Marsh Road at Highway 101, Menlo Park, California

Date(s) of Sampling: 7/26/2012

Sample Number	Material Description	Location(s) of Material	Asbestos Content (Percent)	Asbestos Regulatory Classification	Approximate Quantity
MP-A01	Wallboard and Taping Compound	Utility Room Enclosure	ND	Not applicable	Not applicable
MP-A02	Hard Wall Surfacing Material	Utility Room/Bathroom Enclosure	ND	Not applicable	Not applicable
MP-A03	Roof Field	Roof	ND	Not applicable	Not applicable
MP-A04	Roof Parapet	Parapet	ND	Not applicable	Not applicable
MP-A05	Blue Painted, Black Sealant	Roof	ND	Not applicable	Not applicable
MP-A06	White Sealant	Air Handler on Room	ND	Not applicable	Not applicable
MP-A07 MP-A08	Brown Adhesive	Walls, Utility Room	ND	Not applicable	Not applicable
MP-A09 MP-A10	12”x12” Beige Floor Tile with Black Mastic	West utility area, Office, Entry, Bathroom	Tile: 2% Mastic: 7%	Category 1 Non-Friable	180 SF

ND = None Detected; Trace = less than one percent by visual area estimation; RACM = friable (easily damaged by hand pressure) or likely to become friable during renovation/demolition; Category I Nonfriable = nonfriable packings, gaskets, resilient floor coverings (not including backing), and asphaltic roofing; Category II Nonfriable = Nonfriable materials other than Category I

NOTE: This summary table must not be used alone. Important explanations and limitations are contained in the accompanying survey report text. Percent asbestos content is based upon visual area estimation unless noted otherwise (point count analysis was not performed).

PRE-RENOVATION ASBESTOS SURVEY SUMMARY
SBSA Menlo Park Pump Station
Marsh Road at Highway 101, Menlo Park, California
Date(s) of Sampling: 7/26/2012

Sample Number	Material Description	Location(s) of Material	Asbestos Content (Percent)	Asbestos Regulatory Classification	Approximate Quantity
MP-A11	Black Sealant	West utility area, duct	ND	Not applicable	Not applicable
MP-A142	TSI Elbow	West utility area, generator exhaust	ND	Not applicable	Not applicable
MP-A13	Gasket	West utility area, 2nd level below	ND	Not applicable	Not applicable
MP-A14 MP-A15 MP-A16 MP-A17 MP-A18 MP-A19 MP-A20	Skim Coat	Interior Walls	ND	Not applicable	Not applicable
MP-A21 MP-A22 MP-A23 MP-A24 MP-A25	Stucco	Exterior Walls	ND	Not applicable	Not applicable

ND = None Detected; Trace = less than one percent by visual area estimation; RACM = friable (easily damaged by hand pressure) or likely to become friable during renovation/demolition; Category I Nonfriable = nonfriable packings, gaskets, resilient floor coverings (not including backing), and asphaltic roofing; Category II Nonfriable = Nonfriable materials other than Category I

NOTE: This summary table must not be used alone. Important explanations and limitations are contained in the accompanying survey report text.
Percent asbestos content is based upon visual area estimation unless noted otherwise (point count analysis was not performed).

SUMMARY OF LEAD TESTING LABORATORY RESULTS
SBSA San Carlos Pump Station
150 Monte Vista Drive, San Carlos, California
Date(s) of Sampling: 7/26/2012

Description	Sample Number	Analytical Result
Roof, Parapet Cap, Silver Paint	**MP-Pb01**	**24%**
West Utility Room, Duct, Gray Paint	MP-Pb02	<0.006%
West utility area, Stairs, Yellow	MP-Pb03	<0.008%
West Utility Area, Entry Door, Blue	**MP-Pb04**	**0.54%**
West Utility Room, Hand Rail, Silver	MP-Pb05	<0.04%
West Utility Room, Wall, Beige	MP-Pb06	<0.007%
West Utility Room, MPPS1, Blue	**MP-Pb07**	**0.028%**
West Utility Room, Wall, Beige	MP-Pb08	<0.02%
West Utility Room, Pump 3, Blue	**MP-Pb09**	**0.21%**

% means: percent lead in sample, by weight
< means: less than

Appendix B:

Floor Plan – Sample Locations

Forensic Analytica ENVIRONMENTAL HEALTH CONSULTANTS	FLOOR PLAN FORM	Date: 25 July 2012	Job #: PJ17441	Site: Various SBSA	Title: sketch	Inspectors:

Legend:

N

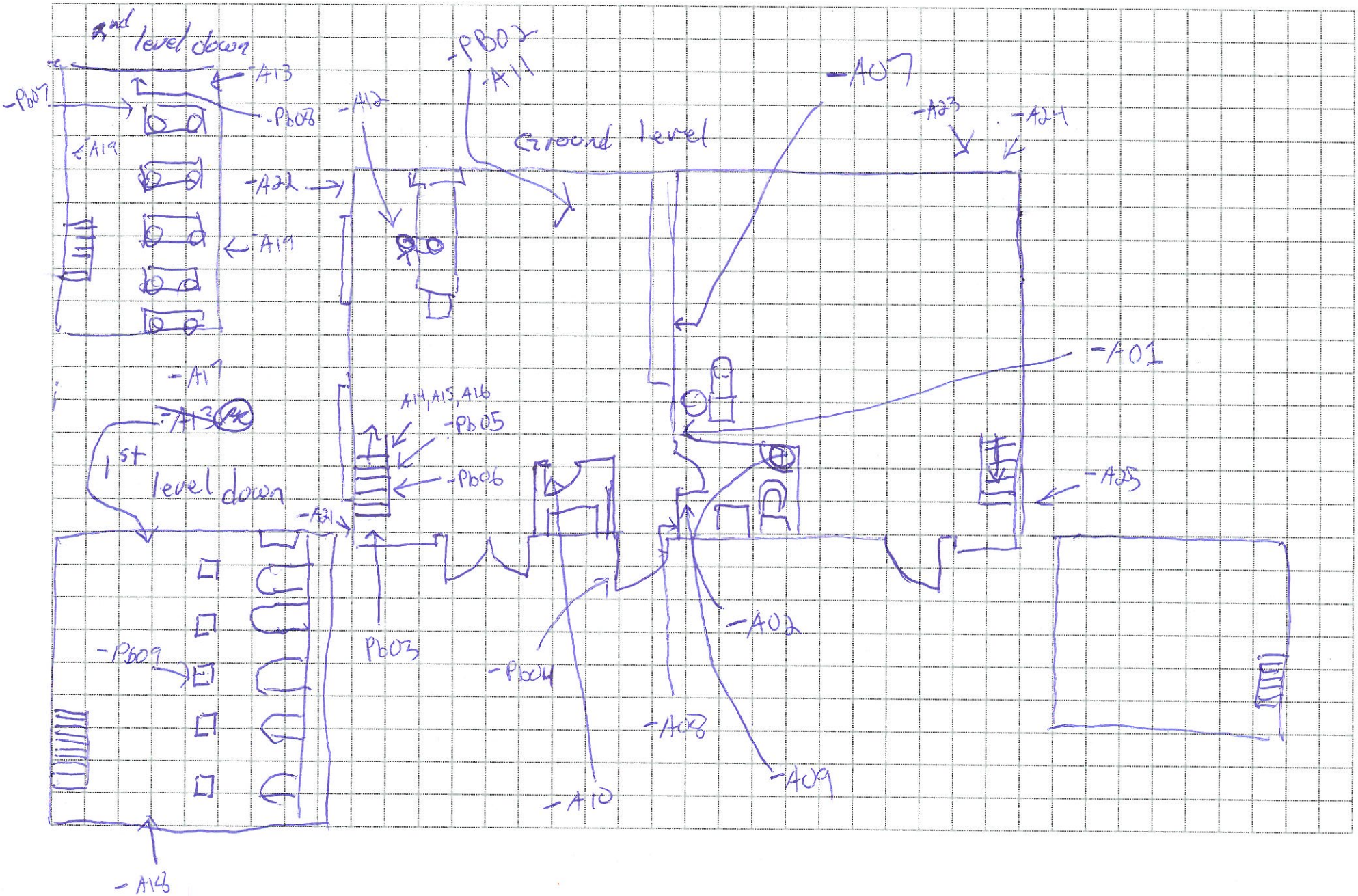

Forensic Analytica ENVIRONMENTAL HEALTH CONSULTANT	FLOOR PLAN FORM	Date: 25 July 2012	Job #: PJ17441	Site: Various SBSA	Title: sketch	Inspectors: RJR ML

Legend:

N

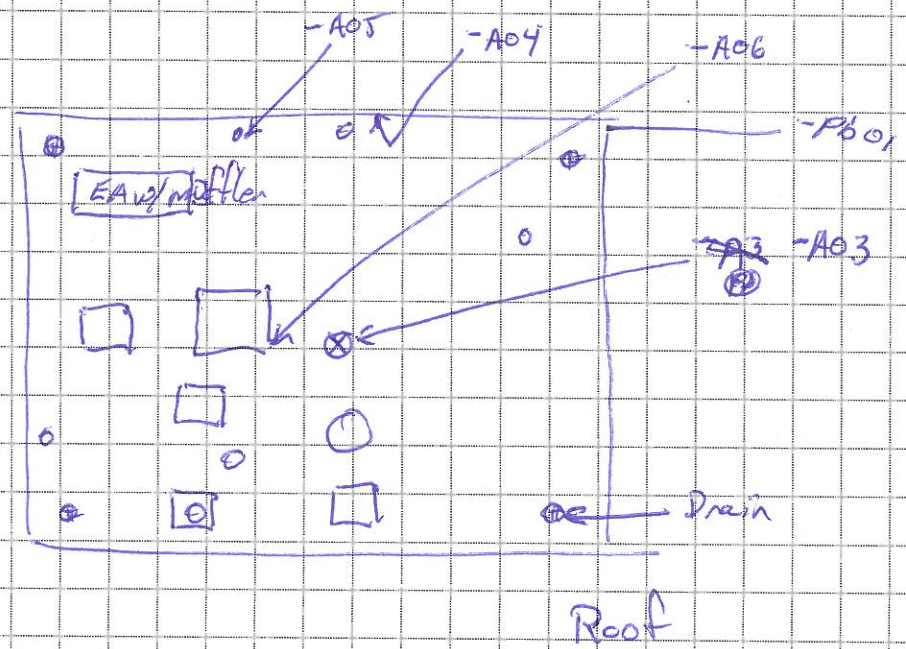

Appendix C:

Supporting Laboratory Reports and Chain-of-Custody Documents

Forensic Analytical Laboratories

Final Report

Metals Analysis of Bulks

Forensic Analytical Consulting Svcs
Paulo Parra
3777 Depot Road
Suite 413
Hayward, CA 94545

Client ID: HAY01
Report Number: M131399
Date Received: 07/26/12
Date Analyzed: 07/31/12
Date Printed: 07/31/12
First Reported: 07/31/12

Job ID / Site: PJ17441; Various SBSA
Date(s) Collected: 7/25/12

FALI Job ID: HAY01
Total Samples Submitted: 1
Total Samples Analyzed: 1

Sample Number	Lab Number	Analyte	Result	Result Units	Reporting Limit*	Method Reference
MP-PB01	30439859	Pb	240000	mg/kg	20000	EPA 3050B/7420

* The Reporting Limit represents the lowest amount of analyte that the laboratory can confidently detect in the sample, and is not a regulatory level. The Units for the Reporting Limit are the same as the Units for the Final Results.

Daniele Siu

Daniele Siu, Laboratory Supervisor, Hayward Laboratory

3777 Depot Road, Suite 409, Hayward, CA 94545 / Telephone: (510) 887-8828 (800) 827-FASI / Fax: (510) 887-4218

Forensic Analytical Laboratories

Final Report

Metals Analysis of Paints

Forensic Analytical Consulting Svcs
Paulo Parra
3777 Depot Road
Suite 413
Hayward, CA 94545

Client ID: HAY01
Report Number: M131269
Date Received: 07/26/12
Date Analyzed: 07/31/12
Date Printed: 07/31/12
First Reported: 07/31/12

Job ID / Site: PJ17441; Various SBSA
Date(s) Collected: 7/25/12

FALI Job ID: HAY01
Total Samples Submitted: 8
Total Samples Analyzed: 8

Sample Number	Lab Number	Analyte	Result	Result Units	Reporting Limit*	Method Reference
MP-PB02	30439860	Pb	< 0.006	wt%	0.006	EPA 3050B/7420
MP-PB03	30439861	Pb	< 0.008	wt%	0.008	EPA 3050B/7420
MP-PB04	30439862	Pb	0.54	wt%	0.03	EPA 3050B/7420
MP-PB05	30439863	Pb	< 0.04	wt%	0.04	EPA 3050B/7420
Comment:	Insufficient sample size for repeatable analysis.					
MP-PB06	30439864	Pb	< 0.007	wt%	0.007	EPA 3050B/7420
MP-PB07	30439865	Pb	0.028	wt%	0.006	EPA 3050B/7420
MP-PB08	30439866	Pb	< 0.02	wt%	0.02	EPA 3050B/7420
Comment:	Insufficient sample size for repeatable analysis.					
MP-PB09	30439867	Pb	0.21	wt%	0.03	EPA 3050B/7420

* The Reporting Limit represents the lowest amount of analyte that the laboratory can confidently detect in the sample, and is not a regulatory level. The Units for the Reporting Limit are the same as the Units for the Final Results.

Daniele Siu

Daniele Siu, Laboratory Supervisor, Hayward Laboratory

3777 Depot Road, Suite 409, Hayward, CA 94545 / Telephone: (510) 887-8828 (800) 827-FASI / Fax: (510) 887-4218

Forensic Analytical

PAINT CHIP SAMPLE REQUEST FORM

Client: HAYO1 FALS S.F. Brown & Caldwell	Sampled by: Pete R. PM: PP Date: 7/25/12
Contact: Paulo Parra Phone: 510-266-4600	Special Instructions: Email results to pparra
Site: Various SBSA	Turnaround Time: Rush / 24-Hour / 3-Day ✓ / Due Date & Time:
Client No.: C1114 ESD No.: PJ17441	Analysis: Flame AA (Pb) / Other:

Sample Number	Sample Location	Component	Color	Substrate	Condition
MP-Pb01	Roof, parapit, northeast corner of cap, seam	parapit cap	silver	metal	G
MP-Pb02	west utility room, e.a. duct in NE corner @ floor level	duct	gray	metal	G
MP-Pb03	west utility room, stairs, step	step	yellow	concrete	F
MP-Pb04	west utility room, entry door	door	blue	metal	G
~~MP-Pb05~~	~~west utility room, intake louvers~~ ML	passive vent	black	metal	G
MP-Pb~~06~~ 05 ML	west utility room, stairwell hand rail	hand rail	silver	metal	G
MP-Pb06	west utility room, stairwell wall	stairwell wall	beige	concrete	F
MP-Pb07	west utility room, 2nd floor below ground, paint on MPPS 1	~~paint on~~ pump TML MPPS 1	blue	metal	F
MP-Pb08	west utility room, 2nd floor below ground, paint on wall	wall	beige	concrete	F
MP-Pb09	west utility room, 1st floor below ground, paint on pump 3	pump	blue	metal	F

Substrate: wood metal concrete plaster drywall brick

Shipped via: ___ Fed Ex ___ Airborne ___ UPS ___ US Mail ___ Courier XXX Drop Off Other: _____

Relinquished by: Redzinski

Date & Time:

Received by: 26 July 2012/0630

Date & Time:

Condition Acceptable Yes No

Forensic Analytical Laboratories

Final Report

Bulk Asbestos Analysis

(EPA Method 600/R-93-116, Visual Area Estimation)

Forensic Analytical Consulting Svcs
Paulo Parra
3777 Depot Road
Suite 413
Hayward, CA 94545

Client ID: HAY01
Report Number: B166541
Date Received: 07/26/12
Date Analyzed: 08/02/12
Date Printed: 08/02/12
First Reported: 08/02/12

Job ID/Site: PJ17441; Various SBSA

Date(s) Collected:

FALI Job ID: HAY01
Total Samples Submitted: 25
Total Samples Analyzed: 25

Sample ID	Lab Number	Asbestos Type	Percent in Layer	Asbestos Type	Percent in Layer	Asbestos Type	Percent in Layer
MP-A01	11283671						
Layer: White Drywall			**ND**				
Layer: Yellow Woven Material			**ND**				
Layer: White Skimcoat/Joint Compound			**ND**				
Layer: Paint			**ND**				
Total Composite Values of Fibrous Components:		**Asbestos (ND)**					
Cellulose (20 %) Fibrous Glass (10 %) Synthetic (3 %)							
MP-A02	11283672						
Layer: White Drywall			**ND**				
Layer: Yellow Woven Material			**ND**				
Layer: White Skimcoat/Joint Compound			**ND**				
Layer: Paint			**ND**				
Total Composite Values of Fibrous Components:		**Asbestos (ND)**					
Cellulose (20 %) Fibrous Glass (10 %) Synthetic (3 %)							
MP-A03	11283673						
Layer: Stones			**ND**				
Layer: Black Tar			**ND**				
Layer: Black Felt			**ND**				
Layer: Black Tar			**ND**				
Layer: Black Felt			**ND**				
Layer: Black Tar			**ND**				
Layer: Black Felt			**ND**				
Layer: Grey Fibrous Material			**ND**				
Total Composite Values of Fibrous Components:		**Asbestos (ND)**					
Cellulose (10 %) Fibrous Glass (35 %)							
Comment: Bulk complex sample.							

3777 Depot Road, Suite 409, Hayward, CA 94545 / Telephone: (510) 887-8828 (800) 827-FASI / Fax: (510) 887-4218

Report Number: B166541
Client Name: Forensic Analytical Consulting Svcs **Date Printed:** 08/02/12

Sample ID	Lab Number	Asbestos Type	Percent in Layer	Asbestos Type	Percent in Layer	Asbestos Type	Percent in Layer
MP-A04	11283674						
Layer: Stones			**ND**				
Layer: Black Tar			**ND**				
Layer: Black Felt			**ND**				
Layer: Stones			**ND**				
Layer: Black Tar			**ND**				
Layer: Black Felt			**ND**				
Layer: Black Tar			**ND**				
Layer: Black Felt			**ND**				
Layer: Black Tar			**ND**				
Layer: Black Felt			**ND**				
Layer: Black Tar			**ND**				
Layer: Black Felt			**ND**				
Layer: Tan Fibrous Material			**ND**				
Total Composite Values of Fibrous Components:		**Asbestos (ND)**					
Cellulose (7 %) Fibrous Glass (40 %)							
Comment: Bulk complex sample.							
MP-A05	11283675						
Layer: Black Tar			**ND**				
Layer: Paint			**ND**				
Total Composite Values of Fibrous Components:		**Asbestos (ND)**					
Cellulose (Trace)							
MP-A06	11283676						
Layer: White Non-Fibrous Material			**ND**				
Total Composite Values of Fibrous Components:		**Asbestos (ND)**					
Cellulose (Trace)							
MP-A07	11283677						
Layer: Brown Mastic			**ND**				
Total Composite Values of Fibrous Components:		**Asbestos (ND)**					
Cellulose (Trace) Wollastonite (2 %)							
MP-A08	11283678						
Layer: Brown Mastic			**ND**				
Total Composite Values of Fibrous Components:		**Asbestos (ND)**					
Cellulose (Trace) Wollastonite (2 %)							
MP-A09	11283679						
Layer: Off-White Tile		Chrysotile	**2 %**				
Layer: Black Mastic		Chrysotile	**7 %**				
Total Composite Values of Fibrous Components:		**Asbestos (2%)**					
Cellulose (Trace)							
MP-A10	11283680						
Layer: Off-White Tile		Chrysotile	**2 %**				
Layer: Black Mastic		Chrysotile	**7 %**				
Total Composite Values of Fibrous Components:		**Asbestos (2%)**					
Cellulose (Trace)							

3777 Depot Road, Suite 409, Hayward, CA 94545 / Telephone: (510) 887-8828 (800) 827-FASI / Fax: (510) 887-4218

Report Number: B166541
Client Name: Forensic Analytical Consulting Svcs **Date Printed:** 08/02/12

Sample ID	Lab Number	Asbestos Type	Percent in Layer	Asbestos Type	Percent in Layer	Asbestos Type	Percent in Layer
MP-A11	11283681						
Layer: Grey Non-Fibrous Material			**ND**				
Total Composite Values of Fibrous Components: Cellulose (Trace)		**Asbestos (ND)**					
MP-A12	11283682						
Layer: Off-White Semi-Fibrous Material			**ND**				
Layer: Grey Semi-Fibrous Material			**ND**				
Total Composite Values of Fibrous Components: Cellulose (5 %) Fibrous Glass (2 %)		**Asbestos (ND)**					
MP-A13	11283683						
Layer: Tan Fibrous Material			**ND**				
Total Composite Values of Fibrous Components: Cellulose (99 %)		**Asbestos (ND)**					
MP-A14	11283684						
Layer: Paint			**ND**				
Layer: Off-White Skimcoat			**ND**				
Total Composite Values of Fibrous Components: Cellulose (Trace)		**Asbestos (ND)**					
MP-A15	11283685						
Layer: Paint			**ND**				
Layer: Off-White Skimcoat			**ND**				
Total Composite Values of Fibrous Components: Cellulose (Trace)		**Asbestos (ND)**					
MP-A16	11283686						
Layer: Paint			**ND**				
Layer: Off-White Skimcoat			**ND**				
Total Composite Values of Fibrous Components: Cellulose (Trace)		**Asbestos (ND)**					
MP-A17	11283687						
Layer: Paint			**ND**				
Layer: Off-White Skimcoat			**ND**				
Total Composite Values of Fibrous Components: Cellulose (Trace)		**Asbestos (ND)**					
MP-A18	11283688						
Layer: Paint			**ND**				
Total Composite Values of Fibrous Components: Cellulose (Trace)		**Asbestos (ND)**					
MP-A19	11283689						
Layer: Paint			**ND**				
Total Composite Values of Fibrous Components: Cellulose (Trace)		**Asbestos (ND)**					

3777 Depot Road, Suite 409, Hayward, CA 94545 / Telephone: (510) 887-8828 (800) 827-FASI / Fax: (510) 887-4218

Report Number: B166541
Client Name: Forensic Analytical Consulting Svcs **Date Printed:** 08/02/12

Sample ID	Lab Number	Asbestos Type	Percent in Layer	Asbestos Type	Percent in Layer	Asbestos Type	Percent in Layer
MP-A20	11283690						
Layer: Off-White Skimcoat			**ND**				
Layer: Paint			**ND**				
Total Composite Values of Fibrous Components: Cellulose (Trace)		**Asbestos (ND)**					
MP-A21	11283691						
Layer: Yellow Cementitious Material			**ND**				
Layer: Paint			**ND**				
Total Composite Values of Fibrous Components: Cellulose (Trace)		**Asbestos (ND)**					
MP-A22	11283692						
Layer: Grey Cementitious Material			**ND**				
Layer: Yellow Cementitious Material			**ND**				
Layer: Paint			**ND**				
Total Composite Values of Fibrous Components: Cellulose (Trace)		**Asbestos (ND)**					
MP-A23	11283693						
Layer: Grey Cementitious Material			**ND**				
Layer: Yellow Cementitious Material			**ND**				
Layer: Paint			**ND**				
Total Composite Values of Fibrous Components: Cellulose (Trace)		**Asbestos (ND)**					
MP-A24	11283694						
Layer: Grey Cementitious Material			**ND**				
Layer: Yellow Cementitious Material			**ND**				
Layer: Paint			**ND**				
Total Composite Values of Fibrous Components: Cellulose (Trace)		**Asbestos (ND)**					
MP-A25	11283695						
Layer: Yellow Cementitious Material			**ND**				
Layer: Paint			**ND**				
Total Composite Values of Fibrous Components: Cellulose (Trace)		**Asbestos (ND)**					

Tad Thrower

Tad Thrower, Laboratory Supervisor, Hayward Laboratory

Note: Limit of Quantification ('LOQ') = 1%. 'Trace' denotes the presence of asbestos below the LOQ. 'ND' = 'None Detected'.

3777 Depot Road, Suite 409, Hayward, CA 94545 / Telephone: (510) 887-8828 (800) 827-FASI / Fax: (510) 887-4218

Forensic Analytical
ENVIRONMENTAL HEALTH CONSULTANTS

BULK SAMPLE REQUEST FORM

Client:	HAY01 FACS San Francisco Brown and Caldwell	Sampled by:	PM: Paulo Parra Date:
Contact:	Paulo Parra Phone: (510) 266-4600	Special Instructions:	E-mail results to pparra@forensica.com and rvelasquez@forensica.com 7 Per Pete R. 7/27/12
Site:	Various SBSA	Turnaround Time:	1-Day ☐ 2-Day ☐ 3-Day ☐ 5-Day ☒ Other ☐ Due Date and Time:
Client No.:	C1114 FACS Job #: PJ17441	Analysis:	☐ PLM Standard / ☐ Point Count / ☐ Flame AA (Pb) / ☐ Other: Prior positive per Pete R.

Sample Number	Material Description	Sample Location	Friable	Cond.	Quantity
MP-A01	WB and taping compound	East utility room, ground level, SW corner of exterior wall of bathroom	Y	G	
MP-A02	hard wall surfacing material	West utility room, bathroom, NE corner	N	G	
MP-A03	roof field	roof, ridge center	N	G	
MP-A04	roof parapit	roof, north parapit, center	N	G	
MP-A05	blue painted, black sealant	vent penetration, adjacent to N parapit, west of center	N	G	
MP-A06	white sealant.	Air handling system, s. of center, SE corner	N	G	
MP-A07	brown adhesive	east utility room, west wall, center	Y	P	
MP-A08	brown adhesive	west utility room, east wall, south end @ entry	Y	P	
MP-A09	12"x12" beige floor tile w/ black adhesive	west utility room, bathroom floor, behind door			
MP-A10	12"x12" beige floor tile w/ black adhesive	west utility room, office floor, at entry			

WB - Wallboard JC - Joint Compound FT - Floor Tile FTM - Floor Tile Mastic BBM - Baseboard Mastic
RSF - Resilient Sheet Flooring CT - Ceiling Tile SAAM - Spray-Applied Acoustical Material WT - Wall Texture

Friable Yes / No Good / Fair / Poor

Shipped via: ☐ Fed Ex ☐ Airborne ☐ UPS ☐ US Mail ☐ Courier ☐ Drop Off ☐ Other:

Relinquished by:	*Date & Time:*	*Received by:*	*Date & Time:* 7-26-12 @ 8am Condition Acceptable ☒ Yes ☐ No
Relinquished by:	*Date & Time:*	*Received by:*	*Date & Time:* Condition Acceptable ☐ Yes ☐ No

Forensic Analytical
ENVIRONMENTAL HEALTH CONSULTANTS

BULK SAMPLE REQUEST FORM

Client:	HAY01 FACS San Francisco Brown and Caldwell	Sampled by: Rodzinsky	PM: Paulo Parra — Date: 25 July 2012
Contact:	Paulo Parra — Phone: (510) 266-4600	Special Instructions:	E-mail results to pparra@forensica.com and rvelasquez@forensica.com
Site:	Various SBSA	Turnaround Time:	1-Day ☐ 2-Day ☐ 3-Day ☑ 5-Day ☐ Other ☐ Due Date and Time:
Client No.:	C1114 — FACS Job #: PJ17441	Analysis:	☑ PLM Standard / ☐ Point Count / ☐ Flame AA (Pb) / ☐ Other:

Sample Number	Material Description	Sample Location	Friable	Cond.	Quantity
MP-A11	black sealant	west utility room, e.a. duct, in NE corner @ floor level	N	G	
MP-A12	TSI - elbow	west utility room, generator exhaust duct elbow insulation	Y	G	
MP-A13	gasket,	west ~~east~~ utility room, second level below ground, at MP51	N	G	
MP-A14	skim coat	west utility room, stairwell wall, between ground and 1st level	F	G	
MP-A15	skim coat	west utility room, stairwell wall, between ground & 1st level below	F	G	
MP-A16	skim coat	west utility room, stairwell wall, between 1st below & 2nd below	F	G	
MP-A17	skim coat	west utility room, north wall, 1st floor below ground	F	G	
MP-A18	skim coat	west utility room, south wall, 1st floor below ground	F	G	
MP-A19	skim coat	west utility room, west wall, 2nd floor below ground	F	G	
MP-A20	skim coat	west utility room, east wall, 2nd floor below ground	F	G	

WB - Wallboard JC - Joint Compound FT - Floor Tile FTM - Floor Tile Mastic BBM - Baseboard Mastic
RSF - Resilient Sheet Flooring CT - Ceiling Tile SAAM - Spray-Applied Acoustical Material WT - Wall Texture
Friable Yes / No — Good / Fair / Poor

Shipped via: ☐ Fed Ex ☐ Airborne ☐ UPS ☐ US Mail ☐ Courier ☐ Drop Off ☐ Other:

Relinquished by: Rodzinsky	*Date & Time:* 26 July 2012/0630	*Received by:*	*Date & Time:* 7-26-12 @ 8am Condition Acceptable ☑ Yes ☐ No
Relinquished by:	*Date & Time:*	*Received by:*	*Date & Time:* Condition Acceptable ☐ Yes ☐ No

Forensic Analytical
ENVIRONMENTAL HEALTH CONSULTANTS

BULK SAMPLE REQUEST FORM

Client:	HAY01 FACS San Francisco Brown and Caldwell	Sampled by: Rulzinski	PM: Paulo Parra — Date: 25 July 2012
Contact:	Paulo Parra — Phone: (510) 266-4600	Special Instructions:	E-mail results to pparra@forensica.com and rvelasquez@forensica.com Per Pete K. 7/27/12 KP
Site:	Various SBSA	Turnaround Time:	1-Day ☐ 2-Day ☐ 3-Day ☑ 5-Day ☒ Other ☐ Due Date and Time:
Client No.:	C1114 — FACS Job #: PJ17441	Analysis:	☑ PLM Standard / ☐ Point Count / ☐ Flame AA (Pb) / ☑ Other: Pb (paint layer only) for MP-A25

Sample Number	Material Description	Sample Location	Friable	Cond.	Quantity
MP-A21	stucco	exterior wall, ~~northwest~~ south west corner	No	F	
MP-A22	stucco	exterior wall, north west corner	N	F	
MP-A23	stucco	exterior wall, northeast corner	N	F	
MP-A24	stucco	exterior wall, northeast corner	N	F	
MP-A25	stucco	exterior wall, southeast corner	N	F	

WB - Wallboard JC - Joint Compound FT - Floor Tile FTM - Floor Tile Mastic BBM - Baseboard Mastic
RSF - Resilient Sheet Flooring CT - Ceiling Tile SAAM - Spray-Applied Acoustical Material WT - Wall Texture

Friable Yes / No — Good / Fair / Poor

Shipped via: ☐ Fed Ex ☐ Airborne ☐ UPS ☐ US Mail ☐ Courier ☐ Drop Off ☐ Other:

Relinquished by:	Date & Time:	Received by:	Date & Time:
Rulzinski	26 July 2012/0630	[signature]	7-26-12 @ 8a Condition Acceptable ☑ Yes ☐ No
Relinquished by:	Date & Time:	Received by:	Date & Time: Condition Acceptable ☐ Yes ☐ No

Appendix D:

Certifications of FACS Personnel

State of California
Division of Occupational Safety and Health
Certified Site Surveillance Technician

Peter James Radzinski
Name

Certification No. **05-3772**

Expires on **04/14/13**

This certification was issued by the Division of Occupational Safety and Health as authorized by Sections 7180 et seq. of the Business and Professions Code.

Forensic Analytical
ENVIRONMENTAL HEALTH CONSULTANTS

C13511 - Business Development

San Francisco	
PJ13238	Client Interface - San Francisco
PJ13244	Presentations - San Francisco
PJ13250	Organizations - San Francisco
PJ13256	Events - San Francisco (call for tradeshow PJ #'s)
PJ13262	Strategic Partners - San Francisco
PJ13232	Business Development - San Francisco (Other Internal)

3eonline.com User: KPEB Pass: MSDS | 1-877-894-9994 (toll free)

State of California Department of Public Health

Lead-Related Construction Certificate

Certificate Type	Expiration Date
Sampling Technician	08/07/2013

19726

Peter Radzinski

ID #: 5018

STATE OF CALIFORNIA

Edmund G. Brown, Jr. *Governor*

DEPARTMENT OF INDUSTRIAL RELATIONS
Division of Occupational Safety and Health
Asbestos Unit
2211 Park Towne Circle, Suite 1
Sacramento, CA 95825-0414
(916) 574-2993 Office (916) 483-0572 Fax
http://www.dir.ca.gov/dirdatabases.html actu@dir.ca.gov

109284806C 355

October 28, 2011

Forensic Analytical Consulting Services
Paulo C Parra
3777 Depot Road, #417
Hayward ' CA 94806

Dear Certified Asbestos Consultant or Technician:

Congratulations, you have passed your certification examination!

Enclosed is your certification card. **To maintain your certification, please abide by the rules printed on the back of the certification card.**

Your certification is valid for a period of one year. If you wish to renew your certification, you must apply for renewal at least 60 days before the expiration date shown on your card in accordance with Title 8, California Code of Regulations, Division 1, Chapter 3.2, Article 2.6, Section 341.15(h) (1).

Please keep and do not send copies of your required AHERA refresher renewal certificates to the Division until you apply for renewal of your certification.

Please contact our office at the above address, fax number or email of any changes in your mailing or work address within 15 days of the change.

Sincerely,

Jeff Ferrell
Senior Industrial Hygienist

Attachment

cc: File

Passed Exam – Card Attached, Revised 01/07/2011

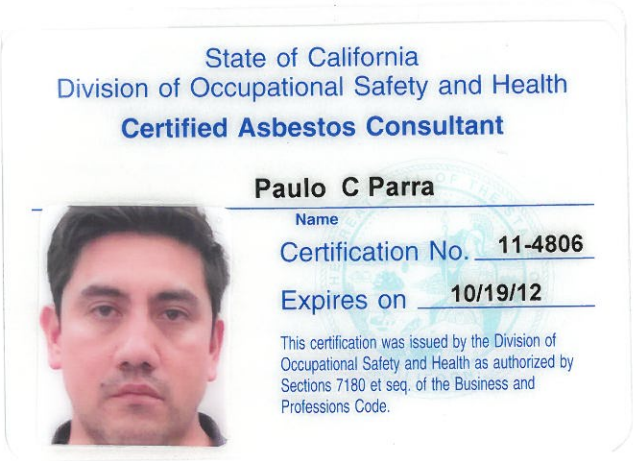

Mr. Paulo C. Parra
Forensic Analytical Consulting Services, Inc.
3777 Depot Road, Suite 413
Hayward, California 94545

Forensic Analytical

ENVIRONMENTAL HEALTH CONSULTANTS

"The solution is in the FACS."

At Forensic Analytical Consulting Services (FACS) our mission is to leave our scientific fingerprint on every client we serve. We accomplish this by delivering data and expertise that is accurate, cost effective, and contextually useful in solving issues of public and environmental health.

Our expert teams are available to respond nationally to help resolve a broad range of chemical, physical and biological concerns:

California		***Nevada***	
Los Angeles	*310-668-5600*	*Las Vegas*	*702-784-0040*
Sacramento	*916-726-1303*	***Oregon***	
San Diego	*858-577-0455*	*Portland*	*503-595-1001*
San Francisco	*510-266-4600*		

www.forensicanalytical.com

This page intentionally left blank.

Attachment B: Pre-Demolition Asbestos Survey & Lead Testing Reports by Forensic Analytical

Redwood City Pump Station, August 10, 2012

Forensic Analytical

ENVIRONMENTAL HEALTH CONSULTANTS

Pre-Demolition Asbestos Survey & Lead Testing Report

SBSA Redwood City Pump Station
1581 Maple Street
Redwood City, California

August 10, 2012

Prepared for:

Mr. Timothy Banyai
Brown and Caldwell
201 North Civic Center Drive, Suite 115
Walnut Creek, CA 94596
tbanyai@brwncald.com

Prepared by:

Wilson Wong
Forensic Analytical Consulting Services, Inc.
3777 Depot Road, Suite 413
Hayward, CA 94545
510-266-4600 ♦ wwong@forensicanalytical.com

FACS Project #PJ17441

Table of Contents

Executive Summary

Forensic Analytical Consulting Services, Inc. (FACS) performed a pre-demolition asbestos survey and lead testing at the SBSA Redwood City Pump Station on July 25, 2012. The purpose of the survey was to identify, sample, and analyze all suspect asbestos-containing materials that may be disturbed in the planned demolition.

The survey was intended to meet the requirements of the Bay Area Air Quality Management District. The results of this report should be incorporated into any demolition plans for the building.

No asbestos-containing materials were identified in this survey.

Lead was detected in seven (7) of the 11 paints tested, all at concentrations below lead-based paint level (0.5%).

Results of laboratory testing are summarized in the attached table. The summary table must not be used alone. Important explanations and limitations are contained in the full report text below.

Introduction

Forensic Analytical Consulting Services, Inc. (FACS) was retained by Mr. Timothy Banyai of Brown and Caldwell to perform a pre-demolition asbestos survey of the SBSA Belmont Pump Station located at 1581 Maple Street, Redwood City, California. Peter Radzinski of FACS performed the investigation on July 25, 2012. Mr. Radzinski is certified by the State of California as a Certified Site Surveillance Technician (Cert. No. 05-3772). Project Management was provided by Mr. Paulo Parra a California Certified Asbestos Consultant (Cert. No 11-4806). Certifications of FACS personnel are presented in Appendix D.

This report contains the findings and recommendations from our inspection and laboratory analysis of samples collected. The purpose of the survey was to identify, sample, and analyze all suspect asbestos- and lead containing materials that may be disturbed in the planned renovation, within the limitations described below.

Site Description and Scope of Work

The Project building was a single-story concrete structure with a tar-and-gravel roof. The building was a pump station, and the interior was divided into east and west sides, each with two sub-levels.

This survey was performed for the planned demolition of the pump station.

Methodology

Our investigation consisted of the following:

- Visual inspection
- Documentation of relevant conditions
- Collection of samples of suspect asbestos-containing materials using the AHERA sampling protocol
- Collection of samples of suspect lead paint
- Submitting samples to a laboratory accredited by AIHA, NVLAP, and ELAP for analysis by PLM & Flame AA
- Presenting analytical results, conclusions, and recommendations in a report, which can be submitted to the Bay Area Air Quality Management District.

The types, numbers, and locations of samples were determined based on information about the planned demolition, visual observations, regulatory requirements, and other project management considerations.

Findings

Survey results are summarized in the attached table (Appendix A).

No asbestos-containing materials were identified in this survey. Lead was detected in seven (7) of the 11 paints tested. Paint testing results ranged from <0.006% to 0.34% lead by weight.

A floor plan showing sample locations is presented in Appendix B. The detailed laboratory report and completed Sampling Data Form (Chain of Custody) are contained in Appendix C.

Conclusions and Discussion

An asbestos-containing material for which sample analysis results by PLM are greater than one percent asbestos is classified as Asbestos-Containing Material (ACM) under regulations promulgated by: : US EPA, BAAQMD, Cal-EPA, OSHA, and Cal/OSHA. US EPA and BAAQMD require that a material with a PLM analytical result less than 10% (including Trace results of less than one percent) be confirmed by the point count method, or else the material must be assumed to be ACM.

An asbestos-containing material for which sample analysis results by PLM are greater than 0.1 percent asbestos is classified as Asbestos-Containing Construction Material (ACCM) by Cal/OSHA and by the California Contractor State Licensing Board (CSLB).

OSHA (Cal/OSHA) regulates all materials that contain asbestos, even at Trace levels. At a minimum, employee training, wet methods, HEPA vacuums, and prompt cleanup and disposal of debris in leak-proof containers are recommended or required for the disturbance of any material that contains asbestos.

No asbestos-containing material was detected in this survey.

Lead is primarily regulated in California by Cal/OSHA and the California Department of Public Health. The current Cal/OSHA Lead in Construction Safety Standard (8 CCR 1532.1) regulation applies to all construction work where an employee may be occupationally exposed to lead. Therefore, work performed on surfaces (including manual demolition, scraping, welding, etc.) containing any amount of lead must comply with the standard, including an exposure assessment (personal air monitoring) to determine if the airborne lead exposure levels are within acceptable limits.

Since **lead was detected in some of the paint chip samples** collected (ranging from 0.006% to 0.34%), 8 CCR 1532.1 applies to any work that will disturb these lead-containing paints. Other components represented by the positive lead samples in the Summary of Lead Testing Laboratory Results shall be considered to be lead-containing until proven otherwise.

For detailed regulatory requirements in specific situations, FACS should be consulted, or the applicable regulations should be examined

Recommendations

1. No further actions are required for asbestos-related work.

2. If any additional suspect asbestos-containing material is discovered during the renovation, the work should stop, and the material should be tested for asbestos content.

3. Removal of the lead paint at spots scheduled for disturbance by the construction would eliminate the applicability of the Cal/OSHA standard to the paint. If the paint is not removed, and the work will involve a Cal/OSHA trigger task (such as torch cutting), workers must be protected during the initial exposure monitoring, per the Cal/OSHA Lead Standard requirements, as if they were exposed above the Permissible Exposure Limit, until actual exposures are determined. With torch cutting, for

example, this includes providing supplied air respiratory protection during the initial exposure assessment.

4. Because some of the paint present is peeling or deteriorated, these areas of paint should be removed from components prior to sending components for recycling or disposal. The paint chips are likely to be classified as hazardous waste for lead, whereas the components with the remaining intact paint may possibly test as non-hazardous. Scraping of loose and flaky paint prior to removal/demolition of the components is intended to prevent loose paint chips from contaminating the larger quantity of components and causing the larger load of waste to be classified as hazardous, and also intended to prevent paint chips from dislodging and contaminating the ground at the site or along the waste/recycling transportation route.

5. Paint chips and other waste generated from the paint removal, as well as painted components destined for disposal, should be tested to determine if it is hazardous waste. For reference, lead waste is considered a hazardous waste if the result of the Toxicity Characterization Leaching Procedure (TCLP) test exceeds 5 mg/liter, under the Resource Conservation and Recovery Act (RCRA), 40 CFR 261, Appendix II. In California, a waste is also considered hazardous if the result of soluble lead content by a Waste Extraction Test (WET) is greater than 5 mg/l, or if the total lead content exceeds 1,000 mg/kg in accordance with Title 22 of the CCR. When TTLC results are below 50 mg/kg, STLC/TCLP limits cannot be exceeded, so the waste would be classified as non-hazardous for lead. Other hazardous metals historically utilized in paint manufacture should also be tested to determine hazardous waste classification.

6. For further assistance with regulatory requirements, FACS should be consulted, and the applicable regulations should be reviewed.

Limitations

The results of this asbestos survey and lead testing do not apply beyond the planned renovation described above. Construction materials in areas not included in the scope of this survey should be assumed to be asbestos-containing materials / lead paint, unless testing is conducted which determines otherwise. If revisions to the renovation project are made that impact additional materials or areas, FACS should be contacted to review the changes and/or to conduct additional asbestos survey work to address potential impacts to untested materials.

The scope of this asbestos survey and lead testing did not include the identification of other hazardous materials, which might exist in the area of the planned renovation. Other hazardous materials may include polychlorinated biphenyls (PCBs) in fluorescent light ballasts and caulking, lead in paint, and mercury in light fixtures and switches.

This investigation is limited to the conditions and practices observed and information made available to FACS. The methods, conclusions, and recommendations provided are based on FACS' judgment and experience and on the standard of practice for professional service. They are subject to the limitations and variability inherent in the methodology employed. As with all environmental investigations, this investigation is limited to the defined scope and does not purport to set forth all hazards, nor to indicate that other hazards do not exist.

Please do not hesitate to contact our office at 510-266-4600 if you have any questions about our report. Thank you for the opportunity to assist Brown and Caldwell in promoting a more healthful environment.

Respectfully,
Forensic Analytical Consulting Services

Wilson Wong
Program Manager
CAC 92-0791, CDPH 4401

Reviewed by:
Forensic Analytical Consulting Services

Steve Jackson
Director of Consulting
CAC 95-1782

Appendix A:

Asbestos Survey & Lead Testing Results Summary Table

PRE-RENOVATION ASBESTOS SURVEY SUMMARY

SBSA Redwood City Pump Station
1581 Maple Street, Redwood City, California
Date(s) of Sampling: 7/25/2012

Sample Number	Material Description	Location(s) of Material	Asbestos Content (Percent)	Asbestos Regulatory Classification	Approximate Quantity
RC-A01 RC-A02	Roof field	Roof	ND	Not applicable	Not applicable
RC-A03	White/gray sealant	Roof, HVAC unit	ND	Not applicable	Not applicable
RC-A04	Black sealant	Roof, at penetrations	ND	Not applicable	Not applicable
RC-A05	Gasket	Roof, HVAC system, flanges	ND	Not applicable	Not applicable
RC-A06	Brown baseboard adhesive	Interior walls	ND	Not applicable	Not applicable

ND = None Detected; Trace = less than one percent by visual area estimation; RACM = friable (easily damaged by hand pressure) or likely to become friable during renovation/demolition; Category I Nonfriable = nonfriable packings, gaskets, resilient floor coverings (not including backing), and asphaltic roofing; Category II Nonfriable = Nonfriable materials other than Category I

NOTE: This summary table must not be used alone. Important explanations and limitations are contained in the accompanying survey report text. Percent asbestos content is based upon visual area estimation unless noted otherwise (point count analysis was not performed).

SUMMARY OF LEAD TESTING LABORATORY RESULTS
SBSA Redwood City Pump Station
1581 Maple Street, Redwood City, California
Date(s) of Sampling: 7/25/2012

Description	Sample Number	Analytical Result
Ground level, electrical panel room, off-white drywall wall	RC-Pb1	<0.006%
Ground level, HVAC room, gray east HVAC unit	**RC-Pb2**	**0.075%**
Ground level, electrical panel room, stairs to sub-level 1, gray handrail	**RC-Pb3**	**0.027%**
Ground level, electrical panel room, green concrete floor	**RC-Pb4**	**0.08%**
Generator room outside entrance, blue metal door	**RC-Pb5**	**0.009%**
West sub-level, beige west concrete wall	RC-Pb6	<0.006%
East sub-level, 4th pipe system from north, gray metal pipe elbow	**RC-Pb7**	**0.065%**
East sub-level, red concrete floor	RC-Pb8	<0.009%
2nd east sub-level, 2nd piping system from north, gray metal pipe	**RC-Pb9**	**0.34%**
2nd east sub-level, stairs, yellow metal steps	**RC-Pb10**	**0.006%**
Exterior, white north concrete wall	RW-Pb101	<0.006%

% means: percent lead in sample, by weight
< means: less than

Appendix B:

Floor Plan – Sample Locations

Forensic Analytical
ENVIRONMENTAL HEALTH CONSULTANTS

Page ____ of ____.

Project Daily Log

Tech: _____.

Client: **Brown and Caldwell** Client No.: **C1114** FACS No.: **PJ17441**

Site Address: **Various**
SBSA

Date:

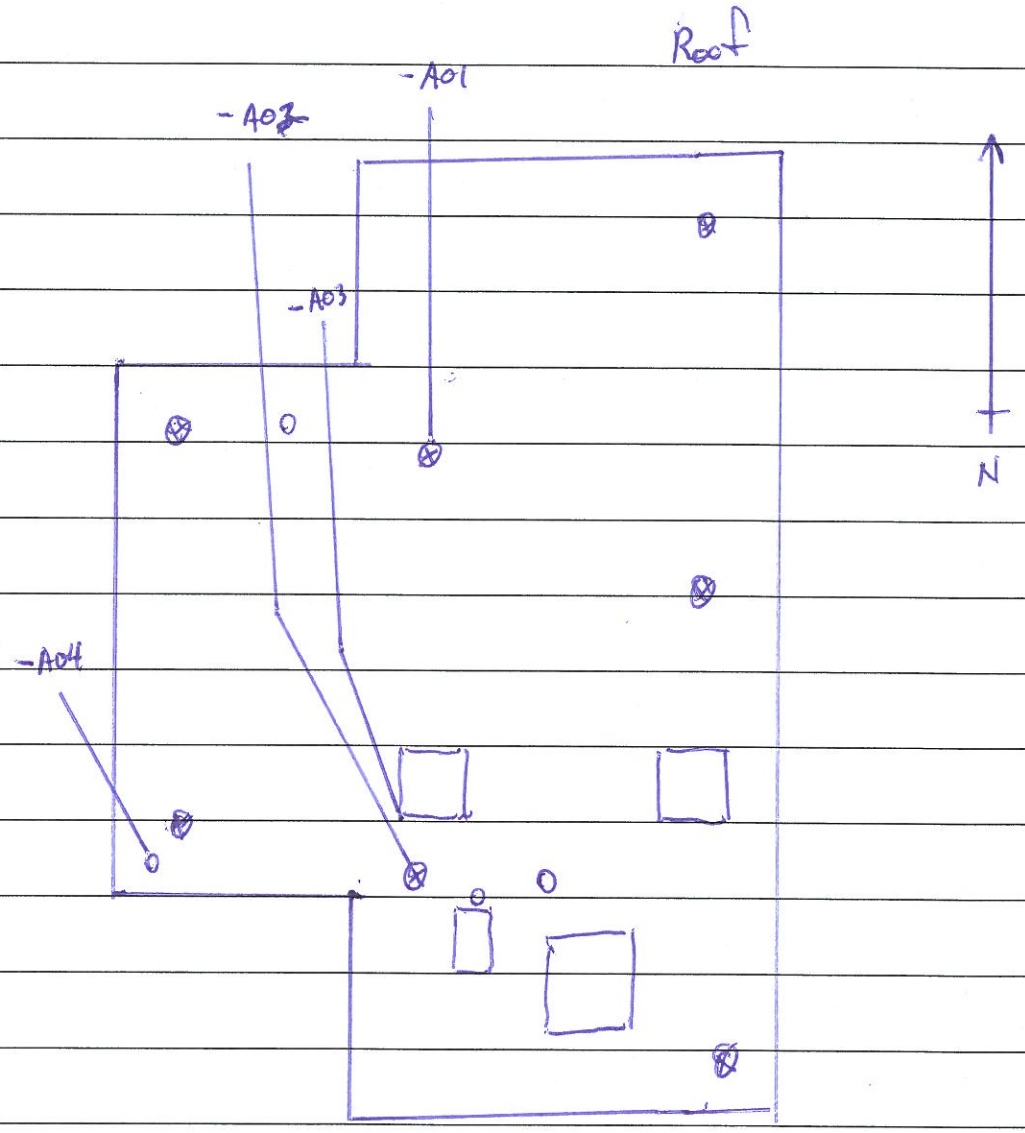

Forensic Analytica ENVIRONMENTAL HEALTH CONSULTANTS	FLOOR PLAN FORM	Date:	Job #: PJ17441	Site: Various SBSA	Title:	Inspectors:

Legend:

← N —

2nd sublevel ~~North~~ East

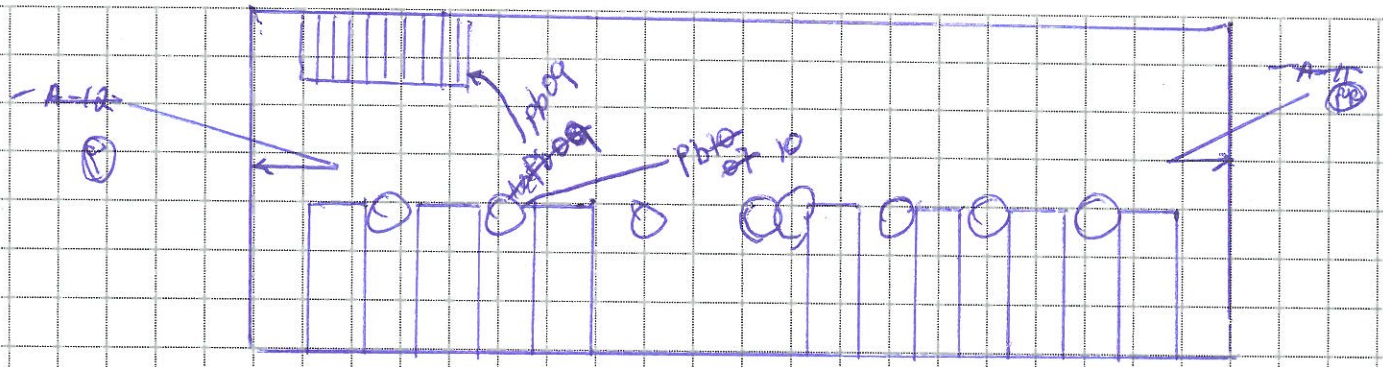

(1 level as deep as the 2nd East)

1-2 sublevel West

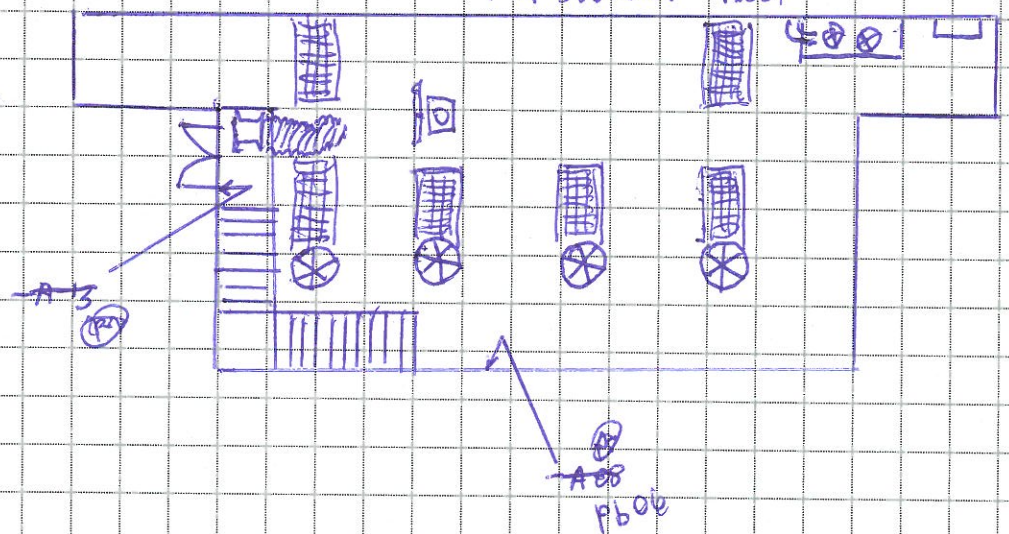

not to scale

Forensic Analytica ENVIRONMENTAL HEALTH CONSULTANT	FLOOR PLAN FORM	Date:	Job #: PJ17441	Site: Various SBSA	Title:	Inspectors:

Legend:

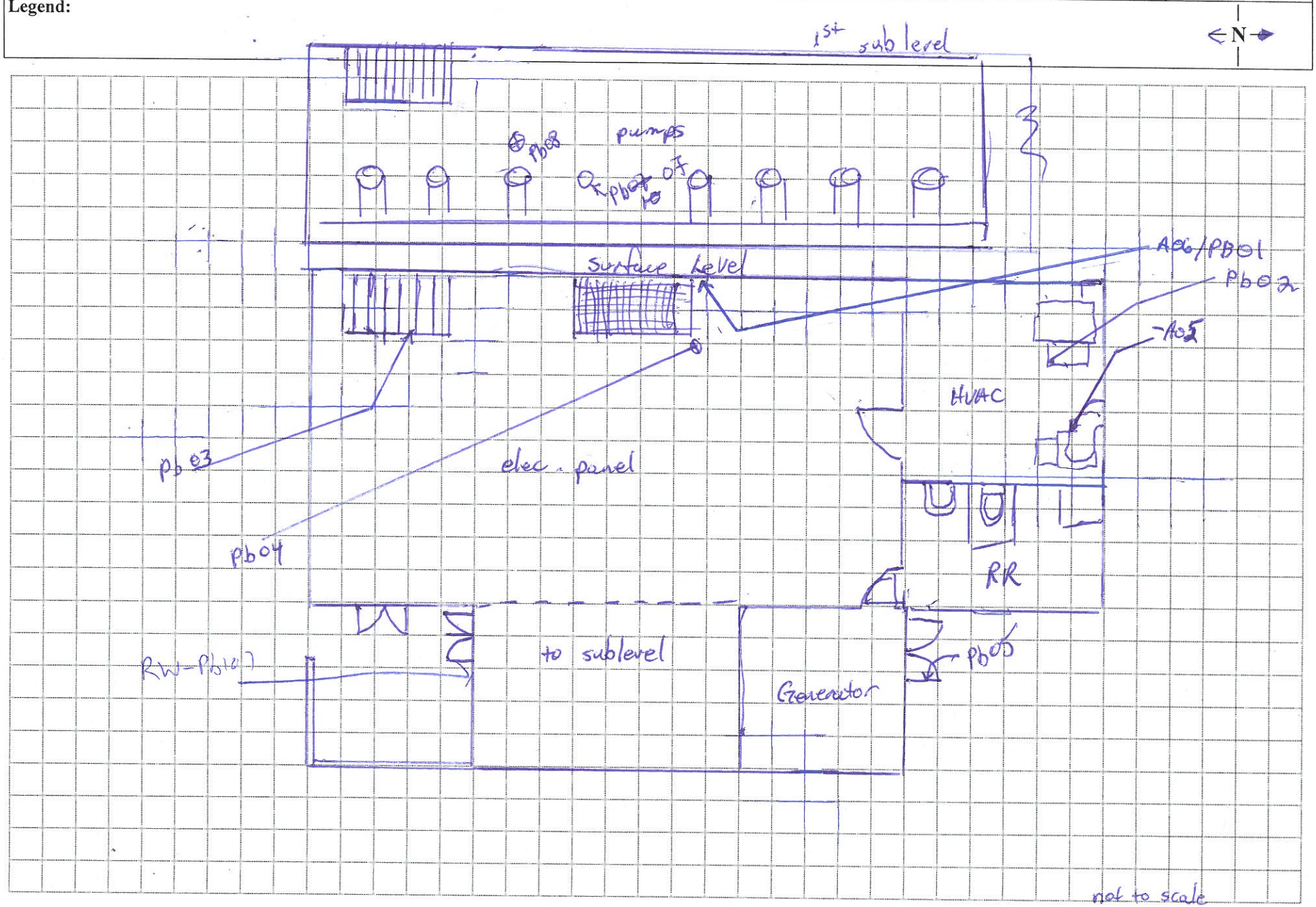

Appendix C:

Supporting Laboratory Reports and Chain-of-Custody Documents

Forensic Analytical Laboratories

Final Report

Bulk Asbestos Analysis

(EPA Method 600/R-93-116, Visual Area Estimation)

Forensic Analytical Consulting Svcs
Paulo Parra
3777 Depot Road
Suite 413
Hayward, CA 94545

Client ID: HAY01
Report Number: B166519
Date Received: 07/26/12
Date Analyzed: 07/31/12
Date Printed: 07/31/12
First Reported: 07/31/12

Job ID/Site: PJ17441; Various SBSA

Date(s) Collected: 07/25/2012

FALI Job ID: HAY01
Total Samples Submitted: 6
Total Samples Analyzed: 6

Sample ID	Lab Number	Asbestos Type	Percent in Layer	Asbestos Type	Percent in Layer	Asbestos Type	Percent in Layer
RC-A01	11283479						
Layer: Stones			**ND**				
Layer: Black Tar			**ND**				
Layer: Black Felt			**ND**				
Layer: Black Tar			**ND**				
Layer: Black Felt			**ND**				
Layer: Black Tar			**ND**				
Layer: Black Felt			**ND**				
Layer: Black Tar			**ND**				
Layer: Black Felt			**ND**				
Layer: Black Tar			**ND**				
Layer: Black Felt			**ND**				
Layer: Black Tar			**ND**				
Layer: Black Felt			**ND**				
Total Composite Values of Fibrous Components:		**Asbestos (ND)**					
Cellulose (Trace)	Fibrous Glass (35 %)	Synthetic (15 %)					
Comment: Bulk complex sample.							
RC-A02	11283480						
Layer: Stones			**ND**				
Layer: Black Tar			**ND**				
Layer: Black Felt			**ND**				
Layer: Black Tar			**ND**				
Layer: Black Felt			**ND**				
Layer: Black Tar			**ND**				
Layer: Black Felt			**ND**				
Layer: Black Tar			**ND**				
Layer: Black Felt			**ND**				
Layer: Black Tar			**ND**				
Layer: Black Felt			**ND**				
Layer: Black Tar			**ND**				
Layer: Black Felt			**ND**				
Total Composite Values of Fibrous Components:		**Asbestos (ND)**					
Cellulose (Trace)	Fibrous Glass (35 %)	Synthetic (15 %)					
Comment: Bulk complex sample.							

3777 Depot Road, Suite 409, Hayward, CA 94545 / Telephone: (510) 887-8828 (800) 827-FASI / Fax: (510) 887-4218

Report Number: B166519
Client Name: Forensic Analytical Consulting Svcs **Date Printed:** 07/31/12

Sample ID	Lab Number	Asbestos Type	Percent in Layer	Asbestos Type	Percent in Layer	Asbestos Type	Percent in Layer
RC-A03	11283481						
Layer: Black Semi-Fibrous Tar			**ND**				
Layer: Stones			**ND**				
Total Composite Values of Fibrous Components: Cellulose (15 %)		**Asbestos (ND)**					
RC-A04	11283482						
Layer: Black Tar			**ND**				
Total Composite Values of Fibrous Components: Cellulose (Trace)		**Asbestos (ND)**					
RC-A05	11283483						
Layer: Dark Grey Foam			**ND**				
Layer: Grey Non-Fibrous Material			**ND**				
Total Composite Values of Fibrous Components: Cellulose (Trace)		**Asbestos (ND)**					
RC-A06	11283484						
Layer: Brown Mastic			**ND**				
Total Composite Values of Fibrous Components: Cellulose (Trace)		**Asbestos (ND)**					

Tad Thrower

Tad Thrower, Laboratory Supervisor, Hayward Laboratory

Note: Limit of Quantification ('LOQ') = 1%. 'Trace' denotes the presence of asbestos below the LOQ. 'ND' = 'None Detected'.

3777 Depot Road, Suite 409, Hayward, CA 94545 / Telephone: (510) 887-8828 (800) 827-FASI / Fax: (510) 887-4218

Forensic Analytical
ENVIRONMENTAL HEALTH CONSULTANTS

BULK SAMPLE REQUEST FORM

Client:	HAY01 FACS San Francisco Brown and Caldwell	Sampled by: Rudzinski	PM: Paulo Parra — Date: 25 July 2012
Contact:	Paulo Parra — Phone: (510) 266-4600	Special Instructions:	E-mail results to pparra@forensica.com and rvelasquez@forensica.com
Site:	Various SBSA	Turnaround Time:	1-Day ☐ 2-Day ☐ 3-Day ☑ 5-Day ☐ Other ☐ — Due Date and Time:
Client No.:	C1114 — FACS Job #: PJ17441	Analysis:	☑ PLM Standard / ☐ Point Count / ☐ Flame AA (Pb) / ☐ Other:

Sample Number	Material Description	Sample Location	Friable	Cond.	Quantity
RC-A01	roof, field	Roof, North end, field.	N	G	
RC-A02	roof, field	Roof, South end, field.	N	G	
RC-A03	white/grey sealant	HVAC unit, most centered, slightly south of center, SW Corner	N	G	
RC-A04	black sealant	Vent penetration, SW corner.	N	G	
RC-A05	gasket	HVAC room, west unit, flange gasket	N	G	
RC-A06	brown adhesive	East wall, elec. panelroom, behind base board	Y	P	

WB – Wallboard JC – Joint Compound FT - Floor Tile FTM - Floor Tile Mastic BBM - Baseboard Mastic
RSF - Resilient Sheet Flooring CT - Ceiling Tile SAAM - Spray-Applied Acoustical Material WT - Wall Texture
Friable Yes / No — Good / Fair / Poor

Shipped via: ☐ Fed Ex ☐ Airborne ☐ UPS ☐ US Mail ☐ Courier ☐ Drop Off / ☐ Other:

Relinquished by:	Date & Time:	Received by:	Date & Time:
Rudzinski	26 July 2012 / 0830		7-26-12 @ 8am Condition Acceptable ☑ Yes ☐ No
Relinquished by:	Date & Time:	Received by:	Date & Time: Condition Acceptable ☐ Yes ☐ No

Forensic Analytical Laboratories

Final Report

Metals Analysis of Paints

Forensic Analytical Consulting Svcs
Paulo Parra
3777 Depot Road
Suite 413
Hayward, CA 94545

Client ID: HAY01
Report Number: M131268
Date Received: 07/26/12
Date Analyzed: 07/31/12
Date Printed: 07/31/12
First Reported: 07/31/12

Job ID / Site: PJ17441; Various SBSA
Date(s) Collected: 7/25/12

FALI Job ID: HAY01
Total Samples Submitted: 10
Total Samples Analyzed: 10

Sample Number	Lab Number	Analyte	Result	Result Units	Reporting Limit*	Method Reference
RC-PB01	30439849	Pb	< 0.006	wt%	0.006	EPA 3050B/7420
RC-PB02	30439850	Pb	0.075	wt%	0.006	EPA 3050B/7420
RC-PB03	30439851	Pb	0.027	wt%	0.006	EPA 3050B/7420
RC-PB04	30439852	Pb	0.08	wt%	0.02	EPA 3050B/7420
RC-PB05	30439853	Pb	0.009	wt%	0.006	EPA 3050B/7420
RC-PB06	30439854	Pb	< 0.006	wt%	0.006	EPA 3050B/7420
RC-PB07	30439855	Pb	0.065	wt%	0.006	EPA 3050B/7420
RC-PB08	30439856	Pb	< 0.009	wt%	0.009	EPA 3050B/7420
RC-PB09	30439857	Pb	0.34	wt%	0.03	EPA 3050B/7420
RC-PB10	30439858	Pb	0.006	wt%	0.006	EPA 3050B/7420

* The Reporting Limit represents the lowest amount of analyte that the laboratory can confidently detect in the sample, and is not a regulatory level. The Units for the Reporting Limit are the same as the Units for the Final Results.

Daniele Siu

Daniele Siu, Laboratory Supervisor, Hayward Laboratory

3777 Depot Road, Suite 409, Hayward, CA 94545 / Telephone: (510) 887-8828 (800) 827-FASI / Fax: (510) 887-4218

Forensic Analytical

PAINT CHIP SAMPLE REQUEST FORM

Client: HAY & FALS S.F. Brown & Caldwell	Sampled by: Pete R.	PM: PP	Date: 7/25/12
Contact: Paulo Parra Phone: 510-266-4600	Special Instructions: Email results to pparra		
Site: Various SBSA	Turnaround Time: Rush / 24 Hour / 3-Day ✓	Due Date & Time:	
Client No.: CHIN ESD No.: PJ17441	Analysis: Flame AA (Pb) / Other:		

Sample Number	Sample Location	Component	Color	Substrate	Condition
RC-Pb01	Ground level, elec. panel room, E. wall center	wall	off white	drywall	G
RC-Pb02	Ground level, HVAC room, ~~East~~ East HVAC unit.	HVAC unit	grey	metal	F
RC-Pb03	Ground level, stair to sub level 1, hand rail, elec. panel room	hand rail	grey	metal	G
RC-Pb04	Ground level, elec. panel room, floor	floor	green	concrete	F
RC-Pb05	~~West sub level, west wall~~ Generator Room Outdoor entry door	~~wall~~ door	~~beige~~ blue	~~concrete~~ metal	G
RC-Pb06	~~East sub level, piping sys., 4th from N.~~ West sub level, west wall.	~~pipe~~ wall elbow	~~grey~~ beige	~~metal~~ concrete	~~G~~ F
RC-Pb07	~~East 2nd East sublevel, floor~~ East sub level, 4th piping sys. from N.	~~floor~~ pipe elbow	~~red~~ grey	~~concrete~~ metal	~~G~~ F
RC-Pb08	East sublevel, floor	floor	red	concrete	G
RC-Pb09	2nd East sub level, 2nd piping sys. from N	pipe	grey	metal	P
RC-Pb10	2nd East sub level, stair, leading edge	step	Yellow	metal	F

Substrate: wood metal concrete plaster drywall brick

Shipped via: Fed Ex ___ Airborne ___ UPS ___ US Mail ___ Courier XXX Drop Off Other: ___

Relinquished by: Rabinski

Date & Time:

Received by: 25 July 2012 / 0630 [signature]

Date & Time: 7/26/12 D/O 8AM

Condition Acceptable Yes No

Final Report

Forensic Analytical Laboratories

Metals Analysis of Paints

Forensic Analytical Consulting Svcs
Paulo Parra
3777 Depot Road
Suite 413
Hayward, CA 94545

Client ID: HAY01
Report Number: M131303
Date Received: 07/26/12
Date Analyzed: 07/30/12
Date Printed: 07/30/12
First Reported: 07/30/12

Job ID / Site: PJ17441; Various SBSA
Date(s) Collected: 7/26/12

FALI Job ID: HAY01
Total Samples Submitted: 1
Total Samples Analyzed: 1

Sample Number	Lab Number	Analyte	Result	Result Units	Reporting Limit*	Method Reference
RW-PB101	30439981	Pb	< 0.006	wt%	0.006	EPA 3050B/7420

* The Reporting Limit represents the lowest amount of analyte that the laboratory can confidently detect in the sample, and is not a regulatory level. The Units for the Reporting Limit are the same as the Units for the Final Results.

Daniele Siu

Daniele Siu, Laboratory Supervisor, Hayward Laboratory

3777 Depot Road, Suite 409, Hayward, CA 94545 / Telephone: (510) 887-8828 (800) 827-FASI / Fax: (510) 887-4218

Forensic Analytical
ENVIRONMENTAL HEALTH CONSULTANTS

PAINT CHIP SAMPLE REQUEST FORM

Client:	HAY01 FACS San Francisco Brown and Caldwell	Sampled by: Pete R.	PM: Paulo Parra Date: 7/26/12
Contact:	Paulo Parra Phone: (510) 266-4600	Special Instructions:	E-mail results to pparra@forensica.com and rvelasquez@forensica.com
Site:	Various SBSA	Turnaround Time:	1-Day ☐ 2-Day ☐ 3-Day ☑ 5-Day ☐ Other ☐ Due Date and Time:
Client No.:	C1114 FACS Job #: PJ17441	Analysis:	☑ Flame AA (Pb) / ☐ Other:

Sample Number	Sample Location	Component	Color	Substrate	Condition
RW-Pb101	exterior, north side, west ~~exterior~~ utility area entrance ML	wall	white	concrete	Fair

Substrate: wood metal concrete plaster drywall brick

Shipped via: ☐ Fed Ex ☐ Airborne ☐ UPS ☐ US Mail ☐ Courier ☐ Drop Off ☐ Other:

Relinquished by: [signature]	*Date & Time:* 26 July 2012/1605	*Received by:* [signature]	*Date & Time:* 7-26-12 @ 4:15 pm Condition Acceptable ☑ Yes ☐ No
Relinquished by:	*Date & Time:*	*Received by:*	*Date & Time:* Condition Acceptable ☐ Yes ☐ No

Appendix D:

Certifications of FACS Personnel

State of California
Division of Occupational Safety and Health

Certified Asbestos Consultant

Wilson W Wong

Name

Certification No. **92-0791**

Expires on **01/29/13**

This certification was issued by the Division of Occupational Safety and Health as authorized by Sections 7180 et seq. of the Business and Professions Code.

State of California Department of Public Health

Lead-Related Construction Certificate

Certificate Type	Expiration Date
Inspector/Assessor	11/21/2012
Project Monitor	11/21/2012

12986

Wilson W. Wong

ID #: 4401

State of California Department of Public Health

Lead-Related Construction Certificate

Certificate Type	Expiration Date
Sampling Technician	08/07/2012

19726

Peter Radzinski

ID #: 5018

State of California
Division of Occupational Safety and Health
Certified Site Surveillance Technician

Peter James Radzinski
Name

Certification No. **05-3772**

Expires on **04/14/13**

This certification was issued by the Division of Occupational Safety and Health as authorized by Sections 7180 et seq. of the Business and Professions Code.

Forensic Analytical
ENVIRONMENTAL HEALTH CONSULTANTS

C13511 - Business Development

San Francisco	
PJ13238	Client Interface - San Francisco
PJ13244	Presentations - San Francisco
PJ13250	Organizations - San Francisco
PJ13256	Events - San Francisco (call for tradeshow PJ #'s)
PJ13262	Strategic Partners - San Francisco
PJ13232	Business Development - San Francisco (Other Internal)

3eonline.com User: KPEB Pass: MSDS | 1-877-894-9994 (toll free)

Forensic Analytical

ENVIRONMENTAL HEALTH CONSULTANTS

"The solution is in the FACS."

At Forensic Analytical Consulting Services (FACS) our mission is to leave our scientific fingerprint on every client we serve. We accomplish this by delivering data and expertise that is accurate, cost effective, and contextually useful in solving issues of public and environmental health.

Our expert teams are available to respond nationally to help resolve a broad range of chemical, physical and biological concerns:

California		***Nevada***	
Los Angeles	*310-668-5600*	*Las Vegas*	*702-784-0040*
Sacramento	*916-726-1303*	***Oregon***	
San Diego	*858-577-0455*	*Portland*	*503-595-1001*
San Francisco	*510-266-4600*		

www.forensicanalytical.com

This page intentionally left blank.

Attachment C: Pre-Demolition Asbestos Survey & Lead Testing Reports by Forensic Analytical

San Carlos Pump Station, August 13, 2012

Forensic Analytical

ENVIRONMENTAL HEALTH CONSULTANTS

Pre-Demolition Asbestos Survey & Lead Testing Report

SBSA San Carlos Pump Station
150 Monte Vista Drive
San Carlos, California

August 13, 2012

Prepared for:

Mr. Timothy Banyai
Brown and Caldwell
201 North Civic Center Drive, Suite 115
Walnut Creek, CA 94596
tbanyai@brwncald.com

Prepared by:

Wilson Wong
Forensic Analytical Consulting Services, Inc.
3777 Depot Road, Suite 413
Hayward, CA 94545
510-266-4600 ♦ wwong@forensicanalytical.com

FACS Project #PJ17441

Table of Contents

Executive Summary

Forensic Analytical Consulting Services, Inc. (FACS) performed a pre-demolition asbestos survey and lead testing at the SBSA San Carlos Pump Station on July 26, 2012. The purpose of the survey was to identify, sample, and analyze all suspect asbestos-containing materials that may be disturbed in the planned demolition.

The survey was intended to meet the requirements of the Bay Area Air Quality Management District. The results of this report should be incorporated into any demolition plans for the building.

Asbestos was identified in the following materials:

Material Description	Location(s) of Material
12-inch beige vinyl floor tile and mastic	**Surface level, west utility area, office and bathroom**

Lead was detected in six (6) of the eight (8) paints tested, all at concentrations below lead-based paint level (0.5%).

Results of laboratory testing are summarized in the attached tables. The summary tables must not be used alone. Important explanations and limitations are contained in the full report text below.

Introduction

Forensic Analytical Consulting Services, Inc. (FACS) was retained by Mr. Timothy Banyai of Brown and Caldwell to perform a pre-demolition asbestos survey of the SBSA San Carlos Pump Station located at 150 Monte Vista Drive, San Carlos, California. Peter Radzinski of FACS performed the investigation on July 26, 2012. Mr. Radzinski is certified by the State of California as a Certified Site Surveillance Technician (Cert. No. 05-3772). Project Management was provided by Mr. Paulo Parra a California Certified Asbestos Consultant (Cert. No 11-4806). Certifications of FACS personnel are presented in Appendix D.

This report contains the findings and recommendations from our inspection and laboratory analysis of samples collected. The purpose of the survey was to identify, sample, and analyze all suspect asbestos- and lead containing materials that may be disturbed in the planned demolition, within the limitations described below.

Site Description and Scope of Work

The Project building was a two-story cinder block structure with rolled-on roof. The building was a pump station, and the interior was divided into east and west utility areas, with a surface level and two sub-levels at the west utility area and one sub-level at the east.

This survey was performed for the planned demolition of the pump station.

Methodology

Our investigation consisted of the following:

- Visual inspection
- Documentation of relevant conditions
- Collection of samples of suspect asbestos-containing materials using the AHERA sampling protocol
- Collection of samples of suspect lead paint
- Submitting samples to a laboratory accredited by AIHA, NVLAP, and ELAP for analysis by PLM & Flame AA
- Presenting analytical results, conclusions, and recommendations in a report, which can be submitted to the Bay Area Air Quality Management District.

The types, numbers, and locations of samples were determined based on information about the planned demolition, visual observations, regulatory requirements, and other project management considerations.

Findings

Survey results are summarized in the attached table (Appendix A).

Asbestos was identified in the following materials:

Material Description	Location(s) of Material	Asbestos Regulatory Classification
12-inch beige vinyl floor tile and mastic	**Surface level, west utility area, office and bathroom**	**Category I Nonfriable ACM**

Lead was detected in six (6) of the eight (8) paints tested. Paint testing results ranged from <0.006% to 0.42% lead by weight.

A floor plan showing sample locations is presented in Appendix B. The detailed laboratory report and completed Sampling Data Form (Chain of Custody) are contained in Appendix C.

Conclusions and Discussion

Asbestos

The 12-inch beige vinyl floor tile and mastic in the office and bathroom contain asbestos. The vinyl floor tile and mastic are Asbestos-Containing Materials (ACM) and also Asbestos-Containing Construction Materials (>0.1% asbestos) in California. The vinyl floor tile and mastic are subject to regulations of USEPA, BAAQMD, Cal/OSHA, and CSLB.

An asbestos-containing material for which sample analysis results by PLM are greater than one percent asbestos is classified as Asbestos-Containing Material (ACM) under regulations promulgated by: : US EPA, BAAQMD, Cal-EPA, OSHA, and Cal/OSHA. US EPA and BAAQMD require that a material with a PLM analytical result less than 10% (including Trace results of less than one percent) be confirmed by the point count method, or else the material must be assumed to be ACM.

An asbestos-containing material for which sample analysis results by PLM are greater than 0.1 percent asbestos is classified as Asbestos-Containing Construction Material (ACCM) by Cal/OSHA and by the California Contractor State Licensing Board (CSLB).

OSHA (Cal/OSHA) regulates all materials that contain asbestos. At a minimum, employee training, wet methods, HEPA vacuums, and prompt cleanup and disposal of debris in leak-proof containers are recommended or required for the disturbance of any material that contains asbestos.

Lead

Lead is primarily regulated in California by Cal/OSHA and the California Department of Public Health. The current Cal/OSHA Lead in Construction Safety Standard (8 CCR 1532.1) regulation applies to all construction work where an employee may be occupationally exposed to lead. Therefore, work performed on surfaces (including manual demolition, scraping, welding, etc.) containing any amount of lead must comply with the standard, including an exposure assessment (personal air monitoring) to determine if the airborne lead exposure levels are within acceptable limits.

Since **lead was detected in some of the paint chip samples** collected (ranging from 0.0023% to 0.42%), 8 CCR 1532.1 applies to any work that will disturb these lead-containing paints. Other components

represented by the positive lead samples in the Summary of Lead Testing Laboratory Results shall be considered to be lead-containing until proven otherwise.

For detailed regulatory requirements in specific situations, FACS should be consulted, or the applicable regulations should be examined

Recommendations

1. The vinyl floor tile and mastic should be removed prior to the planned demolition by a licensed asbestos abatement contractor who complies with all applicable regulations.

2. A Certified Asbestos Consultant should be consulted to assist with project design and monitoring, including clearance inspection and air sampling after asbestos removal.

3. If any additional suspect asbestos-containing material is discovered during the renovation, the work should stop, and the material should be tested for asbestos content.

4. Removal of the lead paint at spots scheduled for disturbance by the construction would eliminate the applicability of the Cal/OSHA standard to the paint. If the paint is not removed, and the work will involve a Cal/OSHA trigger task (such as torch cutting), workers must be protected during the initial exposure monitoring, per the Cal/OSHA Lead Standard requirements, as if they were exposed above the Permissible Exposure Limit, until actual exposures are determined. With torch cutting, for example, this includes providing supplied air respiratory protection during the initial exposure assessment.

5. Because some of the paint present is peeling or deteriorated, these areas of paint should be removed from components prior to sending components for recycling or disposal. The paint chips are likely to be classified as hazardous waste for lead, whereas the components with the remaining intact paint may possibly test as non-hazardous. Scraping of loose and flaky paint prior to removal/demolition of the components is intended to prevent loose paint chips from contaminating the larger quantity of components and causing the larger load of waste to be classified as hazardous, and also intended to prevent paint chips from dislodging and contaminating the ground at the site or along the waste/recycling transportation route.

6. Paint chips and other waste generated from the paint removal, as well as painted components destined for disposal, should be tested to determine if it is hazardous waste. For reference, lead waste is considered a hazardous waste if the result of the Toxicity Characterization Leaching Procedure (TCLP) test exceeds 5 mg/liter, under the Resource Conservation and Recovery Act (RCRA), 40 CFR 261, Appendix II. In California, a waste is also considered hazardous if the result of soluble lead content by a Waste Extraction Test (WET) is greater than 5 mg/l, or if the total lead content exceeds 1,000 mg/kg in accordance with Title 22 of the CCR. When TTLC results are below 50 mg/kg, STLC/TCLP limits cannot be exceeded, so the waste would be classified as non-hazardous for lead. Other hazardous metals historically utilized in paint manufacture should also be tested to determine hazardous waste classification.

7. For further assistance with regulatory requirements, FACS should be consulted, and the applicable regulations should be reviewed.

Limitations

The results of this asbestos survey and lead testing do not apply beyond the planned renovation described above. Construction materials in areas not included in the scope of this survey should be assumed to be asbestos-containing materials / lead paint, unless testing is conducted which determines otherwise. If revisions to the renovation project are made that impact additional materials or areas, FACS should be contacted to review the changes and/or to conduct additional asbestos survey work to address potential impacts to untested materials.

The scope of this asbestos survey and lead testing did not include the identification of other hazardous materials, which might exist in the area of the planned renovation. Other hazardous materials may include polychlorinated biphenyls (PCBs) in fluorescent light ballasts and caulking, lead in paint, and mercury in light fixtures and switches.

This investigation is limited to the conditions and practices observed and information made available to FACS. The methods, conclusions, and recommendations provided are based on FACS' judgment and experience and on the standard of practice for professional service. They are subject to the limitations and variability inherent in the methodology employed. As with all environmental investigations, this investigation is limited to the defined scope and does not purport to set forth all hazards, nor to indicate that other hazards do not exist.

Please do not hesitate to contact our office at 510-266-4600 if you have any questions about our report. Thank you for the opportunity to assist Brown and Caldwell in promoting a more healthful environment.

Respectfully,
Forensic Analytical Consulting Services

Wilson Wong
Program Manager
CAC 92-0791, CDPH 4401

Reviewed by:
Forensic Analytical Consulting Services

Steve Jackson
Director of Consulting
CAC 95-1782

Appendix A:

Asbestos Survey & Lead Testing Results Summary Table

PRE-RENOVATION ASBESTOS SURVEY SUMMARY
SBSA San Carlos Pump Station
150 Monte Vista Drive, San Carlos, California
Date(s) of Sampling: 7/26/2012

Sample Number	Material Description	Location(s) of Material	Asbestos Content (Percent)	Asbestos Regulatory Classification	Approximate Quantity
SC-A01 SC-A02	Roof field	Roof	ND	Not applicable	Not applicable
SC-A03 SC-A04	White sealant	Roof, on ductwork & parapet cap	ND	Not applicable	Not applicable
SC-A05	Black sealant	Roof, at penetrations	ND	Not applicable	Not applicable
SC-A06	Gray sealant	Roof, at penetrations	ND	Not applicable	Not applicable
SC-A07 SC-A08 SC-A09	Baseboard mastic	Utility areas	ND	Not applicable	Not applicable
SC-A10 SC-A11	**12-inch beige floor tile & mastic**	**Utility areas, office & bathroom**	**FT 2% Mastic 5%**	**Cat. I Nonfriable ACM**	**250 sf**
SC-A12	White adhesive & grout	West utility area, bathroom, in association with ceramic tiles	ND	Not applicable	Not applicable

ND = None Detected; Trace = less than one percent by visual area estimation; RACM = friable (easily damaged by hand pressure) or likely to become friable during renovation/demolition; Category I Nonfriable = nonfriable packings, gaskets, resilient floor coverings (not including backing), and asphaltic roofing; Category II Nonfriable = Nonfriable materials other than Category I

NOTE: This summary table must not be used alone. Important explanations and limitations are contained in the accompanying survey report text. Percent asbestos content is based upon visual area estimation unless noted otherwise (point count analysis was not performed).

PRE-RENOVATION ASBESTOS SURVEY SUMMARY
SBSA San Carlos Pump Station
150 Monte Vista Drive, San Carlos, California
Date(s) of Sampling: 7/26/2012

Sample Number	Material Description	Location(s) of Material	Asbestos Content (Percent)	Asbestos Regulatory Classification	Approximate Quantity
SC-A13 SC-A14 SC-A15	Pipe insulation	West utility area	ND	Not applicable	Not applicable
SC-A16	Elbow insulation	West utility area	ND	Not applicable	Not applicable
SC-A17	Mortar	West utility area, in association with cinder blocks	ND	Not applicable	Not applicable
SC-A18 SC-A19 SC-A20 SC-A21 SC-A22 SC-A23 SC-A24	Skim coat	Utility areas, on walls	ND	Not applicable	Not applicable
SC-A25 SC-A26 SC-A27 SC-A28 SC-A29	Stucco	Exterior wall	ND	Not applicable	Not applicable

ND = None Detected; Trace = less than one percent by visual area estimation; RACM = friable (easily damaged by hand pressure) or likely to become friable during renovation/demolition; Category I Nonfriable = nonfriable packings, gaskets, resilient floor coverings (not including backing), and asphaltic roofing; Category II Nonfriable = Nonfriable materials other than Category I

NOTE: This summary table must not be used alone. Important explanations and limitations are contained in the accompanying survey report text. Percent asbestos content is based upon visual area estimation unless noted otherwise (point count analysis was not performed).

SUMMARY OF LEAD TESTING LABORATORY RESULTS
SBSA San Carlos Pump Station
150 Monte Vista Drive, San Carlos, California
Date(s) of Sampling: 7/26/2012

Description	Sample Number	Analytical Result
Roof, blue paint on HVAC units	**Pb-1**	**0.021%**
West utility area, bathroom, ceramic tile	**Pb-2**	**0.0046%**
West utility area, beige paint on ductwork	**Pb-3**	**0.01%**
West utility area, brown paint on metal shroud for motor gear box	**Pb-4**	**0.42%**
West utility area, paint on concrete stairwell steps	**Pb-5**	**0.016%**
West utility area, paint on concrete stairwell landing	Pb-6	<0.006%
West utility area, blue paint on metal pipes	Pb-7	<0.007%
Beige paint on exterior stucco wall	**Pb-8**	**0.0023%**

% means: percent lead in sample, by weight
< means: less than

Appendix B:

Floor Plan – Sample Locations

Forensic Analytica ENVIRONMENTAL HEALTH CONSULTANT	FLOOR PLAN FORM	Date:	Job #: PJ17441	Site: Various SBSA	Title: San Carlos	Inspectors:

Legend:

N

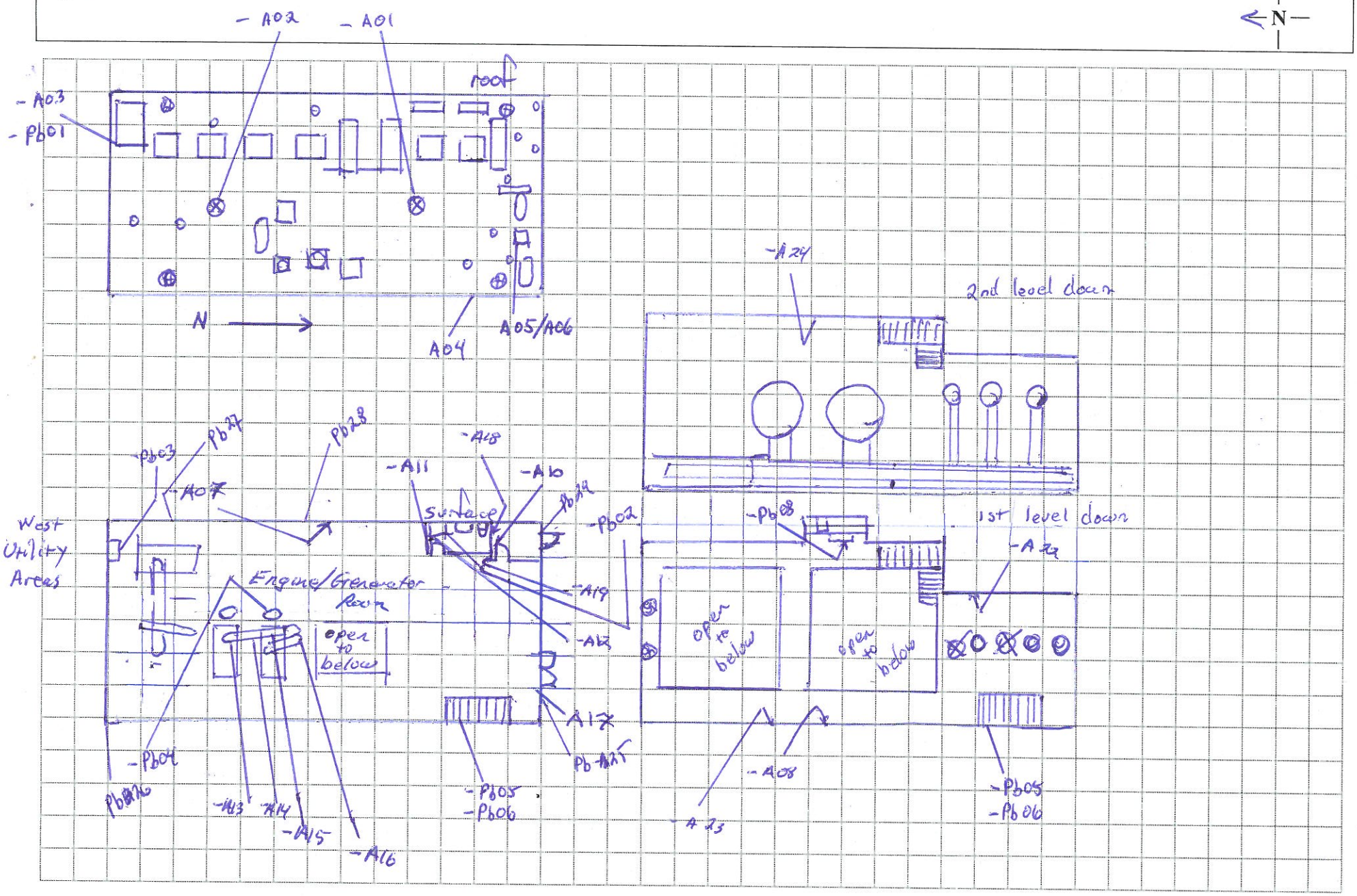

Forensic Analytica ENVIRONMENTAL HEALTH CONSULTANT	FLOOR PLAN FORM	Date:	Job #: PJ17441	Site: Various SBSA	Title:	Inspectors:

Legend:

N

East utility areas

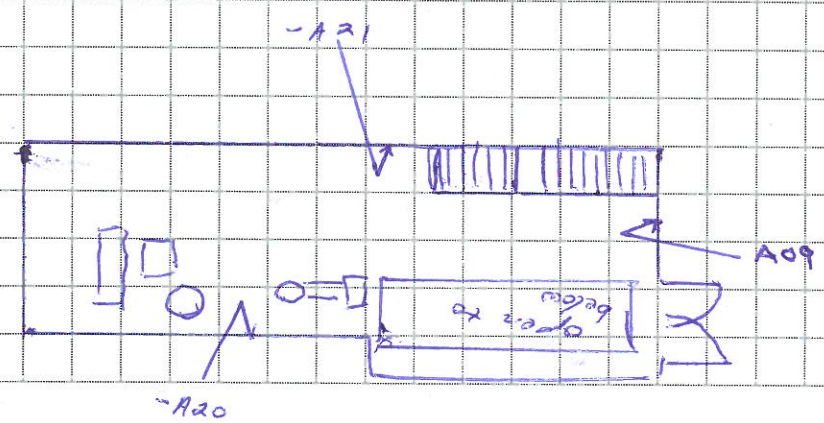

Appendix C:

Supporting Laboratory Reports and Chain-of-Custody Documents

Forensic Analytical Laboratories

Final Report

Bulk Asbestos Analysis

(EPA Method 600/R-93-116, Visual Area Estimation)

Forensic Analytical Consulting Svcs
Paulo Parra
3777 Depot Road
Suite 413
Hayward, CA 94545

Client ID: HAY01
Report Number: B166545
Date Received: 07/26/12
Date Analyzed: 08/02/12
Date Printed: 08/02/12
First Reported: 08/02/12

Job ID/Site: PJ17441; Various SBSA

Date(s) Collected: 07/26/2012

FALI Job ID: HAY01
Total Samples Submitted: 29
Total Samples Analyzed: 29

Sample ID	Lab Number	Asbestos Type	Percent in Layer	Asbestos Type	Percent in Layer	Asbestos Type	Percent in Layer
SC-A01	11283725						
Layer: Stones			**ND**				
Layer: Black Tar			**ND**				
Layer: Black Felt			**ND**				
Layer: Black Tar			**ND**				
Layer: Black Felt			**ND**				
Layer: Black Tar			**ND**				
Layer: Black Felt			**ND**				
Layer: Black Tar			**ND**				
Layer: Black Felt			**ND**				
Layer: Black Tar			**ND**				
Layer: Black Felt			**ND**				
Layer: Tan Fibrous Material			**ND**				
Total Composite Values of Fibrous Components:		**Asbestos (ND)**					
Cellulose (10 %) Fibrous Glass (45 %)							
Comment: Bulk complex sample.							
SC-A02	11283726						
Layer: Stones			**ND**				
Layer: Black Tar			**ND**				
Layer: Black Felt			**ND**				
Layer: Black Tar			**ND**				
Layer: Black Felt			**ND**				
Layer: Black Tar			**ND**				
Layer: Black Felt			**ND**				
Layer: Black Tar			**ND**				
Layer: Black Felt			**ND**				
Layer: Black Tar			**ND**				
Layer: Black Felt			**ND**				
Layer: Tan Fibrous Material			**ND**				
Total Composite Values of Fibrous Components:		**Asbestos (ND)**					
Cellulose (10 %) Fibrous Glass (45 %)							
Comment: Bulk complex sample.							

3777 Depot Road, Suite 409, Hayward, CA 94545 / Telephone: (510) 887-8828 (800) 827-FASI / Fax: (510) 887-4218

Report Number: B166545
Client Name: Forensic Analytical Consulting Svcs **Date Printed:** 08/02/12

Sample ID	Lab Number	Asbestos Type	Percent in Layer	Asbestos Type	Percent in Layer	Asbestos Type	Percent in Layer
SC-A03	11283727						
Layer: White Non-Fibrous Material			**ND**				
Layer: Paint			**ND**				
Total Composite Values of Fibrous Components: Cellulose (Trace)		**Asbestos (ND)**					
SC-A04	11283728						
Layer: White Non-Fibrous Material			**ND**				
Layer: Paint			**ND**				
Total Composite Values of Fibrous Components: Cellulose (Trace)		**Asbestos (ND)**					
SC-A05	11283729						
Layer: Black Mastic			**ND**				
Layer: Stones			**ND**				
Total Composite Values of Fibrous Components: Cellulose (15 %)		**Asbestos (ND)**					
SC-A06	11283730						
Layer: Grey Mastic			**ND**				
Total Composite Values of Fibrous Components: Cellulose (15 %)		**Asbestos (ND)**					
SC-A07	11283731						
Layer: Brown Mastic			**ND**				
Total Composite Values of Fibrous Components: Cellulose (Trace) Wollastonite (2 %)		**Asbestos (ND)**					
SC-A08	11283732						
Layer: Light Brown Non-Fibrous Material			**ND**				
Layer: Brown Mastic			**ND**				
Total Composite Values of Fibrous Components: Cellulose (Trace)		**Asbestos (ND)**					
SC-A09	11283733						
Layer: Light Brown Non-Fibrous Material			**ND**				
Layer: Brown Mastic			**ND**				
Total Composite Values of Fibrous Components: Cellulose (Trace)		**Asbestos (ND)**					
SC-A10	11283734						
Layer: Off-White Tile		Chrysotile	**2 %**				
Layer: Black Mastic		Chrysotile	**5 %**				
Total Composite Values of Fibrous Components: Cellulose (Trace)		**Asbestos (2%)**					
SC-A11	11283735						
Layer: Off-White Tile		Chrysotile	**2 %**				
Layer: Black Mastic		Chrysotile	**5 %**				
Total Composite Values of Fibrous Components: Cellulose (Trace)		**Asbestos (2%)**					

3777 Depot Road, Suite 409, Hayward, CA 94545 / Telephone: (510) 887-8828 (800) 827-FASI / Fax: (510) 887-4218

Report Number: B166545
Client Name: Forensic Analytical Consulting Svcs **Date Printed:** 08/02/12

Sample ID	Lab Number	Asbestos Type	Percent in Layer	Asbestos Type	Percent in Layer	Asbestos Type	Percent in Layer
SC-A12	11283736						
Layer: White Adhesive			**ND**				
Layer: Grey Grout			**ND**				
Total Composite Values of Fibrous Components:		**Asbestos (ND)**					
Cellulose (Trace)							
SC-A13	11283737						
Layer: White Semi-Fibrous Material			**ND**				
Total Composite Values of Fibrous Components:		**Asbestos (ND)**					
Cellulose (2 %) Synthetic (10 %)							
SC-A14	11283738						
Layer: White Semi-Fibrous Material			**ND**				
Total Composite Values of Fibrous Components:		**Asbestos (ND)**					
Cellulose (2 %) Synthetic (10 %)							
SC-A15	11283739						
Layer: White Semi-Fibrous Material			**ND**				
Total Composite Values of Fibrous Components:		**Asbestos (ND)**					
Cellulose (2 %) Synthetic (10 %)							
SC-A16	11283740						
Layer: Beige Non-Fibrous Material			**ND**				
Layer: Off-White Woven Material			**ND**				
Total Composite Values of Fibrous Components:		**Asbestos (ND)**					
Cellulose (5 %) Fibrous Glass (2 %)							
SC-A17	11283741						
Layer: White Mortar			**ND**				
Total Composite Values of Fibrous Components:		**Asbestos (ND)**					
Cellulose (Trace)							
SC-A18	11283742						
Layer: White Skimcoat			**ND**				
Layer: Paint			**ND**				
Total Composite Values of Fibrous Components:		**Asbestos (ND)**					
Cellulose (Trace)							
SC-A19	11283743						
Layer: White Skimcoat			**ND**				
Layer: Paint			**ND**				
Total Composite Values of Fibrous Components:		**Asbestos (ND)**					
Cellulose (Trace)							
SC-A20	11283744						
Layer: White Skimcoat			**ND**				
Layer: Paint			**ND**				
Total Composite Values of Fibrous Components:		**Asbestos (ND)**					
Cellulose (Trace)							

3777 Depot Road, Suite 409, Hayward, CA 94545 / Telephone: (510) 887-8828 (800) 827-FASI / Fax: (510) 887-4218

Report Number: B166545
Client Name: Forensic Analytical Consulting Svcs **Date Printed:** 08/02/12

Sample ID	Lab Number	Asbestos Type	Percent in Layer	Asbestos Type	Percent in Layer	Asbestos Type	Percent in Layer
SC-A21	11283745						
Layer: White Skimcoat			**ND**				
Layer: Paint			**ND**				
Total Composite Values of Fibrous Components: Cellulose (Trace)		**Asbestos (ND)**					
SC-A22	11283746						
Layer: White Skimcoat			**ND**				
Layer: Paint			**ND**				
Total Composite Values of Fibrous Components: Cellulose (Trace)		**Asbestos (ND)**					
SC-A23	11283747						
Layer: White Skimcoat			**ND**				
Layer: Paint			**ND**				
Total Composite Values of Fibrous Components: Cellulose (Trace)		**Asbestos (ND)**					
SC-A24	11283748						
Layer: White Skimcoat			**ND**				
Layer: Paint			**ND**				
Total Composite Values of Fibrous Components: Cellulose (Trace)		**Asbestos (ND)**					
SC-A25	11283749						
Layer: White Cementitious Material			**ND**				
Layer: Paint			**ND**				
Total Composite Values of Fibrous Components: Cellulose (Trace)		**Asbestos (ND)**					
SC-A26	11283750						
Layer: White Cementitious Material			**ND**				
Layer: Paint			**ND**				
Total Composite Values of Fibrous Components: Cellulose (Trace)		**Asbestos (ND)**					
SC-A27	11283751						
Layer: White Cementitious Material			**ND**				
Layer: Paint			**ND**				
Total Composite Values of Fibrous Components: Cellulose (Trace)		**Asbestos (ND)**					
SC-A28	11283752						
Layer: White Cementitious Material			**ND**				
Layer: Paint			**ND**				
Total Composite Values of Fibrous Components: Cellulose (Trace)		**Asbestos (ND)**					

3777 Depot Road, Suite 409, Hayward, CA 94545 / Telephone: (510) 887-8828 (800) 827-FASI / Fax: (510) 887-4218

Report Number: B166545

Client Name: Forensic Analytical Consulting Svcs

Date Printed: 08/02/12

Sample ID	Lab Number	Asbestos Type	Percent in Layer	Asbestos Type	Percent in Layer	Asbestos Type	Percent in Layer
SC-A29	11283753						
Layer: White Cementitious Material			**ND**				
Layer: Paint			**ND**				
Total Composite Values of Fibrous Components:		**Asbestos (ND)**					
Cellulose (Trace)							

Tad Thrower, Laboratory Supervisor, Hayward Laboratory

Note: Limit of Quantification ('LOQ') = 1%. 'Trace' denotes the presence of asbestos below the LOQ. 'ND' = 'None Detected'.

3777 Depot Road, Suite 409, Hayward, CA 94545 / Telephone: (510) 887-8828 (800) 827-FASI / Fax: (510) 887-4218

Forensic Analytical
ENVIRONMENTAL HEALTH CONSULTANTS

BULK SAMPLE REQUEST FORM

Client:	HAY01 FACS San Francisco Brown and Caldwell	Sampled by: Rabzinski	PM: Paulo Parra — Date: 26 July 2012
Contact:	Paulo Parra — Phone: (510) 266-4600	Special Instructions:	E-mail results to pparra@forensica.com and rvelasquez@forensica.com Per Pete R. 7/27/12 (BP)
Site:	Various SBSA	Turnaround Time:	1-Day ☐ 2-Day ☐ 3-Day ☐ 5-Day ☒ Other ☐ Due Date and Time:
Client No.:	C1114 — FACS Job #: PJ17441	Analysis:	☑ PLM Standard / ☐ Point Count / ☐ Flame AA (Pb) / ☐ Other: Prior positive per Pete R.

Sample Number	Material Description	Sample Location	Friable	Cond.	Quantity
SC-A01	roof field	roof center, north half.	N	G	
SC-A02	roof field	roof, center, south half.	N	G	
SC-A03	white sealant	roof, SW quad, blue, HVAC duct seam.	N	G	
SC-A04	white sealant	roof, E. side, under parapit cap	N	G	
SC-A05	black sealant	roof, NE quad, seam @ roof penetration	N	G	
SC-A06	grey sealant	roof, NE quad, seam @ roof penetration	N	G	
SC-A07	brown adhesive	1st surface level, W. utility area, generator room, E. wall, behind baseboard	Y	F	
SC-A08	brown adhesive	1st level down, west, west wall, behind base board	Y	F	
SC-A09	brown adhesive	surface level, E. utility area, S. wall @ entry, behind baseboard.	Y	F	
SC-A10	12"X12" FT and black adhesive	surface level W. utility area, office behind door floor	N	G	

WB – Wallboard JC - Joint Compound FT - Floor Tile FTM - Floor Tile Mastic BBM - Baseboard Mastic
RSF - Resilient Sheet Flooring CT - Ceiling Tile SAAM - Spray-Applied Acoustical Material WT - Wall Texture

Friable Yes / No — Good / Fair / Poor

Shipped via: ☐ Fed Ex ☐ Airborne ☐ UPS ☐ US Mail ☐ Courier ☐ Drop Off ☐ Other:

Relinquished by: Rabzinski	*Date & Time:* 26 July 2012/1608	*Received by:*	*Date & Time:* 7-26-12 @ 4:15 pm Condition Acceptable ☑ Yes ☐ No
Relinquished by:	*Date & Time:*	*Received by:*	*Date & Time:* Condition Acceptable ☐ Yes ☐ No

Forensic Analytical
ENVIRONMENTAL HEALTH CONSULTANTS

BULK SAMPLE REQUEST FORM

Client:	HAY01 FACS San Francisco Brown and Caldwell	Sampled by: Radzinski	PM: Paulo Parra — Date: 26 July 2012
Contact:	Paulo Parra — Phone: (510) 266-4600	Special Instructions:	E-mail results to pparra@forensica.com and rvelasquez@forensica.com
Site:	Various SBSA	Turnaround Time:	1-Day ☐ 2-Day ☐ 3-Day ☐ 5-Day ☒ Other ☐ — Due Date and Time:
Client No.:	C1114 — FACS Job #: PJ17441	Analysis:	☐ PLM Standard / ☐ Point Count / ☐ Flame AA (Pb) / ☐ Other:

Sample Number	Material Description	Sample Location	Friable	Cond.	Quantity
SC-A11	12" x 12" beige FT and black adhesive.	Surface level, W. utility area, bathroom, behind door, floor.	N	G	
SC-A12	white adhesive, grey grout	Surface level, W. utility area, bathroom, shower enclosure, behind and between 2"x6" blue tiles	N	G	
SC-A13	TSI - linear run	Surface level, W. utility area, ~~generator~~ EA line, drive motor #2 N.	Y	G	
SC-A14	TSI - linear run	Surface level, W. utility area, drive motor #2 EA line, C	Y	G	
SC-A15	TSI - linear run	Surface level, W. utility area, drive motor #2 E. EA line, S-	Y	G	
SC-A16	TSI - elbow	Surface level, W. utility area, drive motor #1 EA line	Y	G	
SC-A17	mortar	Surface level, W. utility area, S. wall, between cinder blocks.	N	G	
SC-A18	skim coat	Surface level, W. utility area, office, N. wall	Y	G	
SC-A19	skim coat	Surface ~~area~~ level, W. utility area, just outside rest room	Y	G	
SC-A20	skim coat	Surface ~~area~~ level, E. utility area, E. wall, ctr.	Y	G	

WB – Wallboard JC - Joint Compound FT - Floor Tile FTM - Floor Tile Mastic BBM - Baseboard Mastic
RSF - Resilient Sheet Flooring CT - Ceiling Tile SAAM - Spray-Applied Acoustical Material WT - Wall Texture

Friable Yes / No — Good / Fair / Poor

Shipped via: ☐ Fed Ex ☐ Airborne ☐ UPS ☐ US Mail ☐ Courier ☐ Drop Off ☐ Other:

Relinquished by: Radzinski	*Date & Time:* 26 July 2012/1600	*Received by:*	*Date & Time:* 7-26-12 @ 4:15 pm Condition Acceptable ☒ Yes ☐ No
Relinquished by:	*Date & Time:*	*Received by:*	*Date & Time:* Condition Acceptable ☐ Yes ☐ No

Forensic Analytical
ENVIRONMENTAL HEALTH CONSULTANTS

BULK SAMPLE REQUEST FORM

Client:	HAY01 FACS San Francisco Brown and Caldwell	Sampled by: Rebarinski	PM: Paulo Parra — Date: 26 July 2012
Contact:	Paulo Parra — Phone: (510) 266-4600	Special Instructions:	E-mail results to pparra@forensica.com and rvelasquez@forensica.com
Site:	Various SBSA	Turnaround Time:	1-Day ☑ / 2-Day ☐ / 3-Day ☐ / 5-Day ☑ / Other ☐ / Due Date and Time:
Client No.:	C1114 — FACS Job #: PJ17441	Analysis:	☐ PLM Standard / ☐ Point Count / ☐ Flame AA (Pb) / ☐ Other:

Sample Number	Material Description	Sample Location	Friable	Cond.	Quantity
SC-A21	skim coat	Surface level, East utility area, 1st level down E. wall @ stairs	Y	G	
SC-A22	skim coat	~~1st level down~~ W. utility area, 1st level down ~~at~~ E. wall	Y	G	
SC-A23	skim coat	W. utility area, 1st level down, W. wall	Y	G	
SC-A24	skim coat	W. utility are, 2nd level down, E. wall	Y	G	
SC-A25	stucco	S side @ entry	N	G	
SC-A26	stucco	NW corner	N	G	
SC-A27	stucco	NE corner	N	G	
SC-A28	stucco	E side	N	G	
SC-A29.	stucco	SE corner	N	G	

WB – Wallboard JC - Joint Compound FT - Floor Tile FTM - Floor Tile Mastic BBM - Baseboard Mastic
RSF - Resilient Sheet Flooring CT - Ceiling Tile SAAM - Spray-Applied Acoustical Material WT - Wall Texture

Friable Yes / No — Good / Fair / Poor

Shipped via: ☐ Fed Ex ☐ Airborne ☐ UPS ☐ US Mail ☐ Courier ☐ Drop Off ☐ Other:

Relinquished by:	*Date & Time:* 26 July 2012 / 1600	*Received by:*	*Date & Time:* 7-26-12 4:15 pm Condition Acceptable ☑ Yes ☐ No
Relinquished by:	*Date & Time:*	*Received by:*	*Date & Time:* Condition Acceptable ☐ Yes ☐ No

Forensic Analytical
ENVIRONMENTAL HEALTH CONSULTANTS

PAINT CHIP SAMPLE REQUEST FORM

Client:	HAY01 FACS San Francisco Brown and Caldwell	Sampled by: Radzinski	PM: Paulo Parra — Date: 26 July 2012
Contact:	Paulo Parra — Phone: (510) 266-4600	Special Instructions:	E-mail results to pparra@forensica.com and rvelasquez@forensica.com
Site:	Various SBSA	Turnaround Time:	1-Day ☐ 2-Day ☐ 3-Day ☑ 5-Day ☐ Other ☐ Due Date and Time:
Client No.:	C1114 — FACS Job #: PJ17441	Analysis:	☑ Flame AA (Pb) / ☐ Other:

Sample Number	Sample Location	Component	Color	Substrate	Condition
SC-Pb01	roof, SW Quad, blue HVAC unit duct seam	duct	blue	metal	G
SC-Pb02	surface level, W. utility area, restroom, shower enclosure, tile	wall	blue	WB	G
SC-Pb03	Surface level, W. utility area, HVAC duct, N. wall	duct	beige	metal	P
SC-Pb04	Surface level, W. utility area, #1 drive motor gear box	metal shroud	brown	metal	G
SC-Pb05	W. utility area, 1st level down, ~~Water~~ steps	~~wall~~ Floor	brown ~~beige~~	concrete	G
SC-Pb06	W. utility area, 1st level down, steps, leading edge	Floor	Yellow	concrete	G
SC-Pb07	W. utility area, 1st level down, E. pipe	pipe	blue	metal	G
SC-Pb08	Exterior W. side	wall	beige	stucco	G
~~SC-Pb09~~					
~~SC-Pb10~~					

Substrate: wood metal concrete plaster drywall brick

Shipped via: ☐ Fed Ex ☐ Airborne ☐ UPS ☐ US Mail ☐ Courier ☐ Drop Off ☐ Other:

Relinquished by: Radzinski	Date & Time: 26 July 2012 / 1605	Received by:	Date & Time: 7-26-12 @ 4:15pm Condition Acceptable ☑ Yes ☐ No
Relinquished by:	Date & Time:	Received by:	Date & Time: Condition Acceptable ☐ Yes ☐ No

Forensic Analytical Laboratories

Final Report

Metals Analysis of Paints

Forensic Analytical Consulting Svcs
Paulo Parra
3777 Depot Road
Suite 413
Hayward, CA 94545

Client ID: HAY01
Report Number: M131302
Date Received: 07/26/12
Date Analyzed: 07/31/12
Date Printed: 07/31/12
First Reported: 07/31/12

Job ID / Site: PJ17441; Various SBSA
Date(s) Collected: 7/26/12

FALI Job ID: HAY01
Total Samples Submitted: 6
Total Samples Analyzed: 6

Sample Number	Lab Number	Analyte	Result	Result Units	Reporting Limit*	Method Reference
SC-PB01	30439973	Pb	0.021	wt%	0.006	EPA 3050B/7420
SC-PB03	30439975	Pb	0.010	wt%	0.006	EPA 3050B/7420
SC-PB04	30439976	Pb	0.42	wt%	0.03	EPA 3050B/7420
Comment:	Insufficient sample size for repeatable analysis.					
SC-PB05	30439977	Pb	0.016	wt%	0.006	EPA 3050B/7420
SC-PB06	30439978	Pb	< 0.006	wt%	0.006	EPA 3050B/7420
SC-PB07	30439979	Pb	< 0.007	wt%	0.007	EPA 3050B/7420

* The Reporting Limit represents the lowest amount of analyte that the laboratory can confidently detect in the sample, and is not a regulatory level. The Units for the Reporting Limit are the same as the Units for the Final Results.

Daniele Siu

Daniele Siu, Laboratory Supervisor, Hayward Laboratory

3777 Depot Road, Suite 409, Hayward, CA 94545 / Telephone: (510) 887-8828 (800) 827-FASI / Fax: (510) 887-4218

Final Report

Forensic Analytical Laboratories

Metals Analysis of Bulks

Forensic Analytical Consulting Svcs
Paulo Parra
3777 Depot Road
Suite 413
Hayward, CA 94545

Client ID: HAY01
Report Number: M131398
Date Received: 07/26/12
Date Analyzed: 07/31/12
Date Printed: 07/31/12
First Reported: 07/31/12

Job ID / Site: PJ17441; Various SBSA
Date(s) Collected: 7/26/12

FALI Job ID: HAY01
Total Samples Submitted: 1
Total Samples Analyzed: 1

Sample Number	Lab Number	Analyte	Result	Result Units	Reporting Limit*	Method Reference
SC-PB08	30439980	Pb	23	mg/kg	6	EPA 3050B/7420

* The Reporting Limit represents the lowest amount of analyte that the laboratory can confidently detect in the sample, and is not a regulatory level. The Units for the Reporting Limit are the same as the Units for the Final Results.

Daniele Siu

Daniele Siu, Laboratory Supervisor, Hayward Laboratory

3777 Depot Road, Suite 409, Hayward, CA 94545 / Telephone: (510) 887-8828 (800) 827-FASI / Fax: (510) 887-4218

Final Report

Forensic Analytical Laboratories

Metals Analysis of Bulks

Forensic Analytical Consulting Svcs
Paulo Parra
3777 Depot Road
Suite 413
Hayward, CA 94545

Client ID: HAY01
Report Number: M131397
Date Received: 07/26/12
Date Analyzed: 07/31/12
Date Printed: 07/31/12
First Reported: 07/31/12

Job ID / Site: PJ17441; Various SBSA
Date(s) Collected: 7/26/12

FALI Job ID: HAY01
Total Samples Submitted: 1
Total Samples Analyzed: 1

Sample Number	Lab Number	Analyte	Result	Result Units	Reporting Limit*	Method Reference
SC-PB02	30439974	Pb	46	mg/kg	7	EPA 3050B/7420

* The Reporting Limit represents the lowest amount of analyte that the laboratory can confidently detect in the sample, and is not a regulatory level. The Units for the Reporting Limit are the same as the Units for the Final Results.

Daniele Siu

Daniele Siu, Laboratory Supervisor, Hayward Laboratory

3777 Depot Road, Suite 409, Hayward, CA 94545 / Telephone: (510) 887-8828 (800) 827-FASI / Fax: (510) 887-4218

Appendix D:

Certifications of FACS Personnel

STATE OF CALIFORNIA

Edmund G. Brown, Jr. *Governor*

DEPARTMENT OF INDUSTRIAL RELATIONS
Division of Occupational Safety and Health
Asbestos Unit
2211 Park Towne Circle, Suite 1
Sacramento, CA 95825-0414
(916) 574-2993 Office (916) 483-0572 Fax
http://www.dir.ca.gov/dirdatabases.html actu@dir.ca.gov

109284806C 355

October 28, 2011

Forensic Analytical Consulting Services
Paulo C Parra
3777 Depot Road, #417
Hayward ' CA 94806

Dear Certified Asbestos Consultant or Technician:

Congratulations, you have passed your certification examination!

Enclosed is your certification card. **To maintain your certification, please abide by the rules printed on the back of the certification card.**

Your certification is valid for a period of one year. If you wish to renew your certification, you must apply for renewal at least 60 days before the expiration date shown on your card in accordance with Title 8, California Code of Regulations, Division 1, Chapter 3.2, Article 2.6, Section 341.15(h) (1).

Please keep and do not send copies of your required AHERA refresher renewal certificates to the Division until you apply for renewal of your certification.

Please contact our office at the above address, fax number or email of any changes in your mailing or work address within 15 days of the change.

Sincerely,

Jeff Ferrell
Senior Industrial Hygienist

Attachment

cc: File

Passed Exam – Card Attached, Revised 01/07/2011

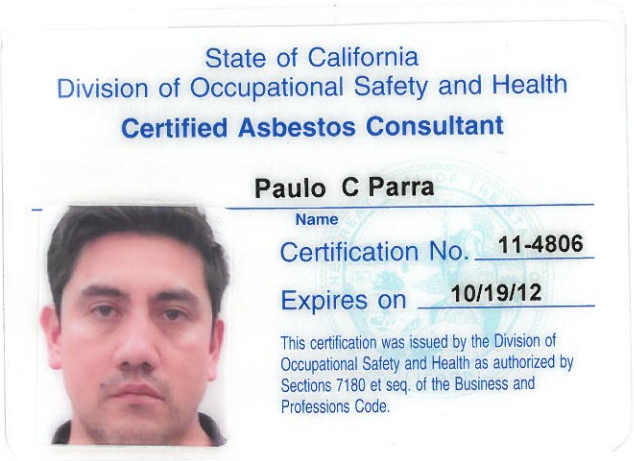

Mr. Paulo C. Parra
Forensic Analytical Consulting Services, Inc.
3777 Depot Road, Suite 413
Hayward, California 94545

State of California
Division of Occupational Safety and Health
Certified Site Surveillance Technician

Peter James Radzinski
Name

Certification No. **05-3772**

Expires on **04/14/13**

This certification was issued by the Division of Occupational Safety and Health as authorized by Sections 7180 et seq. of the Business and Professions Code.

Forensic Analytical
ENVIRONMENTAL HEALTH CONSULTANTS

C13511 - Business Development

San Francisco	
PJ13238	Client Interface - San Francisco
PJ13244	Presentations - San Francisco
PJ13250	Organizations - San Francisco
PJ13256	Events - San Francisco (call for tradeshow PJ #'s)
PJ13262	Strategic Partners - San Francisco
PJ13232	Business Development - San Francisco (Other Internal)

3eonline.com User: KPEB Pass: MSDS | 1-877-894-9994 (toll free)

State of California Department of Public Health

Lead-Related Construction Certificate

Certificate Type	Expiration Date
Sampling Technician	08/07/2013

19726

Peter Radzinski

ID #: 5018

Forensic Analytical

ENVIRONMENTAL HEALTH CONSULTANTS

"The solution is in the FACS."

At Forensic Analytical Consulting Services (FACS) our mission is to leave our scientific fingerprint on every client we serve. We accomplish this by delivering data and expertise that is accurate, cost effective, and contextually useful in solving issues of public and environmental health.

Our expert teams are available to respond nationally to help resolve a broad range of chemical, physical and biological concerns:

California		***Nevada***	
Los Angeles	*310-668-5600*	*Las Vegas*	*702-784-0040*
Sacramento	*916-726-1303*	***Oregon***	
San Diego	*858-577-0455*	*Portland*	*503-595-1001*
San Francisco	*510-266-4600*		

www.forensicanalytical.com

This page intentionally left blank.

Attachment D: Pre-Demolition Asbestos Survey & Lead Testing Reports by Forensic Analytical

Belmont Pump Station, August 10, 2012

Forensic Analytical

ENVIRONMENTAL HEALTH CONSULTANTS

Pre-Demolition Asbestos Survey & Lead Testing Report

SBSA Belmont Pump Station
1385 Shoreway Road
Belmont, California

August 10, 2012

Prepared for:

Mr. Timothy Banyai
Brown and Caldwell
201 North Civic Center Drive, Suite 115
Walnut Creek, CA 94596
tbanyai@brwncald.com

Prepared by:

Wilson Wong
Forensic Analytical Consulting Services, Inc.
3777 Depot Road, Suite 413
Hayward, CA 94545
510-266-4600 ♦ wwong@forensicanalytical.com

FACS Project #PJ17441

Table of Contents

Executive Summary

Forensic Analytical Consulting Services, Inc. (FACS) performed a pre-demolition asbestos survey and lead testing at the SBSA Belmont Pump Station on July 26, 2012. The purpose of the survey was to identify, sample, and analyze all suspect asbestos-containing materials that may be disturbed in the planned demolition.

The survey was intended to meet the requirements of the Bay Area Air Quality Management District. The results of this report should be incorporated into any demolition plans for the building.

No asbestos-containing materials were identified in this survey.

Lead was detected in five (5) of the seven (7) paints tested, all at concentrations below lead-based paint level (0.5%).

Results of laboratory testing are summarized in the attached table. The summary table must not be used alone. Important explanations and limitations are contained in the full report text below.

Introduction

Forensic Analytical Consulting Services, Inc. (FACS) was retained by Mr. Timothy Banyai of Brown and Caldwell to perform a pre-demolition asbestos survey of the SBSA Belmont Pump Station located at 1385 Shoreway Road, Belmont, California. Peter Radzinski of FACS performed the investigation on July 26, 2012. Mr. Radzinski is certified by the State of California as a Certified Site Surveillance Technician (Cert. No. 05-3772). Project Management was provided by Mr. Paulo Parra a California Certified Asbestos Consultant (Cert. No 11-4806). Certifications of FACS personnel are presented in Appendix D.

This report contains the findings and recommendations from our inspection and laboratory analysis of samples collected. The purpose of the survey was to identify, sample, and analyze all suspect asbestos- and lead containing materials that may be disturbed in the planned renovation, within the limitations described below.

Site Description and Scope of Work

The Project building was a single-story cinder block structure with a tar-and-gravel roof. The building was a pump station, and the interior was divided into north and south utility areas, each with two sub-levels.

This survey was performed for the planned demolition of the pump station. However, since the north sub-levels were confined spaces, they were excluded from the scope of this survey.

Methodology

Our investigation consisted of the following:

- Visual inspection
- Documentation of relevant conditions
- Collection of samples of suspect asbestos-containing materials using the AHERA sampling protocol
- Collection of samples of suspect lead paint
- Submitting samples to a laboratory accredited by AIHA, NVLAP, and ELAP for analysis by PLM & Flame AA
- Presenting analytical results, conclusions, and recommendations in a report, which can be submitted to the Bay Area Air Quality Management District.

The types, numbers, and locations of samples were determined based on information about the planned demolition, visual observations, regulatory requirements, and other project management considerations.

Findings

Survey results are summarized in the attached table (Appendix A).

No asbestos-containing materials were identified in this survey. Lead was detected in five (5) of the seven (7) paints tested. Paint testing results ranged from <0.006% to 0.067% lead by weight.

A floor plan showing sample locations is presented in Appendix B. The detailed laboratory report and completed Sampling Data Form (Chain of Custody) are contained in Appendix C.

Conclusions and Discussion

An asbestos-containing material for which sample analysis results by PLM are greater than one percent asbestos is classified as Asbestos-Containing Material (ACM) under regulations promulgated by: : US EPA, BAAQMD, Cal-EPA, OSHA, and Cal/OSHA. US EPA and BAAQMD require that a material with a PLM analytical result less than 10% (including Trace results of less than one percent) be confirmed by the point count method, or else the material must be assumed to be ACM.

An asbestos-containing material for which sample analysis results by PLM are greater than 0.1 percent asbestos is classified as Asbestos-Containing Construction Material (ACCM) by Cal/OSHA and by the California Contractor State Licensing Board (CSLB).

OSHA (Cal/OSHA) regulates all materials that contain asbestos, even at Trace levels. At a minimum, employee training, wet methods, HEPA vacuums, and prompt cleanup and disposal of debris in leak-proof containers are recommended or required for the disturbance of any material that contains asbestos.

No asbestos-containing material was detected in this survey.

Lead is primarily regulated in California by Cal/OSHA and the California Department of Public Health. The current Cal/OSHA Lead in Construction Safety Standard (8 CCR 1532.1) regulation applies to all construction work where an employee may be occupationally exposed to lead. Therefore, work performed on surfaces (including manual demolition, scraping, welding, etc.) containing any amount of lead must comply with the standard, including an exposure assessment (personal air monitoring) to determine if the airborne lead exposure levels are within acceptable limits.

Since **lead was detected in some of the paint chip samples** collected (ranging from 0.0021% to 0.067%), 8 CCR 1532.1 applies to any work that will disturb these lead-containing paints. Other components represented by the positive lead samples in the Summary of Lead Testing Laboratory Results shall be considered to be lead-containing until proven otherwise.

For detailed regulatory requirements in specific situations, FACS should be consulted, or the applicable regulations should be examined

Recommendations

1. No further actions are required for asbestos-related work.

2. If any additional suspect asbestos-containing material is discovered during the renovation, the work should stop, and the material should be tested for asbestos content.

3. Removal of the lead paint at spots scheduled for disturbance by the construction would eliminate the applicability of the Cal/OSHA standard to the paint. If the paint is not removed, and the work will involve a Cal/OSHA trigger task (such as torch cutting), workers must be protected during the initial exposure monitoring, per the Cal/OSHA Lead Standard requirements, as if they were exposed above the Permissible Exposure Limit, until actual exposures are determined. With torch cutting, for

example, this includes providing supplied air respiratory protection during the initial exposure assessment.

4. Because some of the paint present is peeling or deteriorated, these areas of paint should be removed from components prior to sending components for recycling or disposal. The paint chips are likely to be classified as hazardous waste for lead, whereas the components with the remaining intact paint may possibly test as non-hazardous. Scraping of loose and flaky paint prior to removal/demolition of the components is intended to prevent loose paint chips from contaminating the larger quantity of components and causing the larger load of waste to be classified as hazardous, and also intended to prevent paint chips from dislodging and contaminating the ground at the site or along the waste/recycling transportation route.

5. Paint chips and other waste generated from the paint removal, as well as painted components destined for disposal, should be tested to determine if it is hazardous waste. For reference, lead waste is considered a hazardous waste if the result of the Toxicity Characterization Leaching Procedure (TCLP) test exceeds 5 mg/liter, under the Resource Conservation and Recovery Act (RCRA), 40 CFR 261, Appendix II. In California, a waste is also considered hazardous if the result of soluble lead content by a Waste Extraction Test (WET) is greater than 5 mg/l, or if the total lead content exceeds 1,000 mg/kg in accordance with Title 22 of the CCR. When TTLC results are below 50 mg/kg, STLC/TCLP limits cannot be exceeded, so the waste would be classified as non-hazardous for lead. Other hazardous metals historically utilized in paint manufacture should also be tested to determine hazardous waste classification.

6. For further assistance with regulatory requirements, FACS should be consulted, and the applicable regulations should be reviewed.

Limitations

The results of this asbestos survey and lead testing do not apply beyond the planned renovation described above. Construction materials in areas not included in the scope of this survey should be assumed to be asbestos-containing materials / lead paint, unless testing is conducted which determines otherwise. If revisions to the renovation project are made that impact additional materials or areas, FACS should be contacted to review the changes and/or to conduct additional asbestos survey work to address potential impacts to untested materials.

The scope of this asbestos survey and lead testing did not include the identification of other hazardous materials, which might exist in the area of the planned renovation. Other hazardous materials may include polychlorinated biphenyls (PCBs) in fluorescent light ballasts and caulking, lead in paint, and mercury in light fixtures and switches.

This investigation is limited to the conditions and practices observed and information made available to FACS. The methods, conclusions, and recommendations provided are based on FACS' judgment and experience and on the standard of practice for professional service. They are subject to the limitations and variability inherent in the methodology employed. As with all environmental investigations, this investigation is limited to the defined scope and does not purport to set forth all hazards, nor to indicate that other hazards do not exist.

Please do not hesitate to contact our office at 510-266-4600 if you have any questions about our report. Thank you for the opportunity to assist Brown and Caldwell in promoting a more healthful environment.

Respectfully,
Forensic Analytical Consulting Services

Wilson Wong
Program Manager
CAC 92-0791, CDPH 4401

Reviewed by:
Forensic Analytical Consulting Services

Steve Jackson
Director of Consulting
CAC 95-1782

Appendix A:

Asbestos Survey & Lead Testing Results Summary Table

PRE-RENOVATION ASBESTOS SURVEY SUMMARY

SBSA Belmont Pump Station
1385 Shoreway Road, Belmont, California
Date(s) of Sampling: 7/26/2012

Sample Number	Material Description	Location(s) of Material	Asbestos Content (Percent)	Asbestos Regulatory Classification	Approximate Quantity
BL-A01	Brown adhesive	Surface level, at louvers	ND	Not applicable	Not applicable
BL-A02	HVAC seam cloth	On ductwork	ND	Not applicable	Not applicable
BL-A03	Wall coating	Surface level, interior walls	ND	Not applicable	Not applicable
BL-A04	Tanks coating	Surface level, utility area, tank	ND	Not applicable	Not applicable
BL-A05	Roof field	Roof	ND	Not applicable	Not applicable
BL-A06	Roof parapet flashing	Roof, at parapet	ND	Not applicable	Not applicable
BL-A07	Black sealant	Roof	ND	Not applicable	Not applicable
BL-A08	White sealant	Roof	ND	Not applicable	Not applicable

ND = None Detected; Trace = less than one percent by visual area estimation; RACM = friable (easily damaged by hand pressure) or likely to become friable during renovation/demolition; Category I Nonfriable = nonfriable packings, gaskets, resilient floor coverings (not including backing), and asphaltic roofing; Category II Nonfriable = Nonfriable materials other than Category I

NOTE: This summary table must not be used alone. Important explanations and limitations are contained in the accompanying survey report text. Percent asbestos content is based upon visual area estimation unless noted otherwise (point count analysis was not performed).

PRE-RENOVATION ASBESTOS SURVEY SUMMARY

SBSA Belmont Pump Station
1385 Shoreway Road, Belmont, California
Date(s) of Sampling: 7/26/2012

Sample Number	Material Description	Location(s) of Material	Asbestos Content (Percent)	Asbestos Regulatory Classification	Approximate Quantity
BL-A09 BL-A10 BL-A11	Stucco	Exterior wall	ND	Not applicable	Not applicable
BL-A12 BL-A13	Mortar	Exterior, at façade	ND	Not applicable	Not applicable

ND = None Detected; Trace = less than one percent by visual area estimation; RACM = friable (easily damaged by hand pressure) or likely to become friable during renovation/demolition; Category I Nonfriable = nonfriable packings, gaskets, resilient floor coverings (not including backing), and asphaltic roofing; Category II Nonfriable = Nonfriable materials other than Category I

NOTE: This summary table must not be used alone. Important explanations and limitations are contained in the accompanying survey report text.
Percent asbestos content is based upon visual area estimation unless noted otherwise (point count analysis was not performed).

SUMMARY OF LEAD TESTING LABORATORY RESULTS
SBSA Belmont Pump Station
1385 Shoreway Road, Belmont, California
Date(s) of Sampling: 7/26/2012

Description	Sample Number	Analytical Result
Roof, white painted penetration by muffler	**Pb-1**	**0.067**
Roof, white painted parapet	Pb-2	<0.006%
South utility area, gray painted diesel fuel tank	Pb-3	<0.006%
South utility area, 1st level down, gray painted floor	**Pb-4**	**0.012%**
South utility area, 1st level down, gray painted pump	**Pb-5**	**0.04%**
South utility area, 1st level down, white painted wall	**Pb-6**	**0.04%**
Tan tile on east exterior wall	**Pb-7**	**0.0021%**

% means: percent lead in sample, by weight
< means: less than

Appendix B:

Floor Plan – Sample Locations

Forensic Analytica ENVIRONMENTAL HEALTH CONSULTANT	FLOOR PLAN FORM	Date:	Job #: PJ17441	Site: Various SBSA	Title:	Inspectors:

Legend:

N

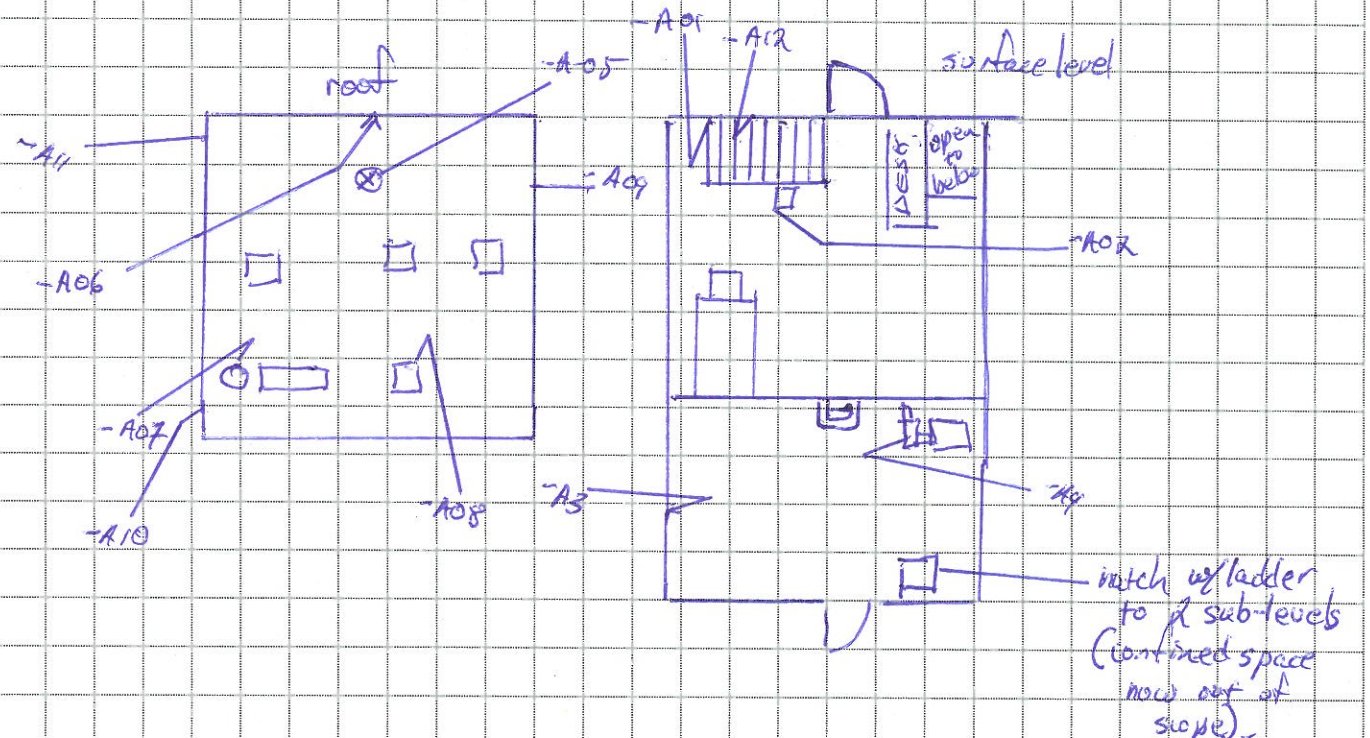

Not to scale, bldg. is square

Appendix C:

Supporting Laboratory Reports and Chain-of-Custody Documents

Forensic Analytical Laboratories

Final Report

Bulk Asbestos Analysis

(EPA Method 600/R-93-116, Visual Area Estimation)

Forensic Analytical Consulting Svcs
Paulo Parra
3777 Depot Road
Suite 413
Hayward, CA 94545

Client ID: HAY01
Report Number: B166543
Date Received: 07/26/12
Date Analyzed: 08/02/12
Date Printed: 08/02/12
First Reported: 08/02/12

Job ID/Site: PJ17441; Various SBSA

Date(s) Collected: 07/26/2012

FALI Job ID: HAY01
Total Samples Submitted: 13
Total Samples Analyzed: 13

Sample ID	Lab Number	Asbestos Type	Percent in Layer	Asbestos Type	Percent in Layer	Asbestos Type	Percent in Layer
BL-A01	11283706						
Layer: Light Brown Non-Fibrous Material			**ND**				
Layer: Brown Mastic			**ND**				
Total Composite Values of Fibrous Components:		**Asbestos (ND)**					
Cellulose (Trace)							
BL-A02	11283707						
Layer: Off-White Semi-Fibrous Material			**ND**				
Total Composite Values of Fibrous Components:		**Asbestos (ND)**					
Cellulose (Trace) Fibrous Glass (60 %)							
BL-A03	11283708						
Layer: White Coating			**ND**				
Layer: Paint			**ND**				
Total Composite Values of Fibrous Components:		**Asbestos (ND)**					
Cellulose (Trace)							
BL-A04	11283709						
Layer: White Coating			**ND**				
Layer: Paint			**ND**				
Total Composite Values of Fibrous Components:		**Asbestos (ND)**					
Cellulose (Trace)							
BL-A05	11283710						
Layer: Black Tar			**ND**				
Layer: Black Felt			**ND**				
Layer: Black Tar			**ND**				
Layer: Black Felt			**ND**				
Layer: Black Tar			**ND**				
Layer: Black Felt			**ND**				
Layer: Black Tar			**ND**				
Layer: Black Felt			**ND**				
Layer: Brown Fibrous Material			**ND**				
Total Composite Values of Fibrous Components:		**Asbestos (ND)**					
Cellulose (10 %) Fibrous Glass (45 %)							
Comment: Bulk complex sample.							

3777 Depot Road, Suite 409, Hayward, CA 94545 / Telephone: (510) 887-8828 (800) 827-FASI / Fax: (510) 887-4218

Report Number: B166543
Client Name: Forensic Analytical Consulting Svcs **Date Printed:** 08/02/12

Sample ID	Lab Number	Asbestos Type	Percent in Layer	Asbestos Type	Percent in Layer	Asbestos Type	Percent in Layer
BL-A06	11283711						
Layer: Black Tar			**ND**				
Layer: Black Felt			**ND**				
Layer: Black Tar			**ND**				
Layer: Black Felt			**ND**				
Layer: Black Tar			**ND**				
Layer: Black Felt			**ND**				
Layer: Black Tar			**ND**				
Layer: Black Felt			**ND**				
Layer: Black Tar			**ND**				
Layer: Black Felt			**ND**				
Total Composite Values of Fibrous Components:		**Asbestos (ND)**					
Cellulose (5 %) Fibrous Glass (50 %)							
Comment: Bulk complex sample.							
BL-A07	11283712						
Layer: Black Mastic			**ND**				
Total Composite Values of Fibrous Components:		**Asbestos (ND)**					
Cellulose (Trace)							
BL-A08	11283713						
Layer: White Non-Fibrous Material			**ND**				
Total Composite Values of Fibrous Components:		**Asbestos (ND)**					
Cellulose (Trace)							
BL-A09	11283714						
Layer: White Cementitious Material			**ND**				
Layer: Paint			**ND**				
Total Composite Values of Fibrous Components:		**Asbestos (ND)**					
Cellulose (Trace)							
BL-A10	11283715						
Layer: White Cementitious Material			**ND**				
Layer: Paint			**ND**				
Total Composite Values of Fibrous Components:		**Asbestos (ND)**					
Cellulose (Trace)							
BL-A11	11283716						
Layer: White Cementitious Material			**ND**				
Layer: Paint			**ND**				
Total Composite Values of Fibrous Components:		**Asbestos (ND)**					
Cellulose (Trace)							
BL-A12	11283717						
Layer: Tan Mortar			**ND**				
Total Composite Values of Fibrous Components:		**Asbestos (ND)**					
Cellulose (Trace)							

3777 Depot Road, Suite 409, Hayward, CA 94545 / Telephone: (510) 887-8828 (800) 827-FASI / Fax: (510) 887-4218

Report Number: B166543

Client Name: Forensic Analytical Consulting Svcs

Date Printed: 08/02/12

Sample ID	Lab Number	Asbestos Type	Percent in Layer	Asbestos Type	Percent in Layer	Asbestos Type	Percent in Layer
BL-A13	11283718						
Layer: Tan Mortar			**ND**				
Total Composite Values of Fibrous Components:		**Asbestos (ND)**					
Cellulose (Trace)							

Tad Thrower, Laboratory Supervisor, Hayward Laboratory

Note: Limit of Quantification ('LOQ') = 1%. 'Trace' denotes the presence of asbestos below the LOQ. 'ND' = 'None Detected'.

3777 Depot Road, Suite 409, Hayward, CA 94545 / Telephone: (510) 887-8828 (800) 827-FASI / Fax: (510) 887-4218

Forensic Analytical
ENVIRONMENTAL HEALTH CONSULTANTS

BULK SAMPLE REQUEST FORM

Client:	HAY01 FACS San Francisco Brown and Caldwell	Sampled by: Rebzinski	PM: Paulo Parra — Date: 26 July 2012
Contact:	Paulo Parra — Phone: (510) 266-4600	Special Instructions:	E-mail results to pparra@forensica.com and rvelasquez@forensica.com per Pete R. 7/27/12
Site:	Various SBSA	Turnaround Time:	1-Day ☐ 2-Day ☐ 3-Day ☑ 5-Day ☒ Other ☐ — Due Date and Time:
Client No.:	C1114 — FACS Job #: PJ17441	Analysis:	☑ PLM Standard / ☐ Point Count / ☐ Flame AA (Pb) / ☐ Other: Prior positive per Pete R.

Sample Number	Material Description	Sample Location	Friable	Cond.	Quantity
BL-A01	brown adhesive	Surface level, south utility area, S. wall @ louvres	Y	G	
BL-A02	glassed HVAC seam cloth	Surface level, adjacent to stairs HVAC duct south utility area	N	G	
BL-A03	wall coating	Surface level, N. utility area, E wall, glassed wall coating.	N	F	
BL-A04	coating	Surface level, N. utility area, SW quad, tank protective coating	N	G	
BL-A05	roof field	roof, center of south half	N	G	
BL-A06	roof parapit flashing	roof, south parapit, center.	N	G	
BL-A07	black sealant	roof, EA penetration @ muffler, NE quad	N	G	
BL-A08	white sealant	roof, HVAC penetration, NW quad	N	G	
BL-A09	stucco	Exterior, west side, S. end.	N	G	
BL-A10	stucco	Exterior, E side, N. end.	N	G	

WB Wallboard JC - Joint Compound FT - Floor Tile FTM - Floor Tile Mastic BBM - Baseboard Mastic
RSF - Resilient Sheet Flooring CT - Ceiling Tile SAAM - Spray-Applied Acoustical Material WT - Wall Texture

Friable Yes / No — Good / Fair / Poor

Shipped via: ☐ Fed Ex ☐ Airborne ☐ UPS ☐ US Mail ☐ Courier ☐ Drop Off ☐ Other:

Relinquished by:	Date & Time:	Received by:	Date & Time:
Rebzinski	26 July 2012 / 1606		7-26-12 @ 4:15 pm Condition Acceptable ☑ Yes ☐ No
Relinquished by:	Date & Time:	Received by:	Date & Time: Condition Acceptable ☐ Yes ☐ No

Forensic Analytical
ENVIRONMENTAL HEALTH CONSULTANTS

BULK SAMPLE REQUEST FORM

Client:	HAY01 FACS San Francisco Brown and Caldwell	Sampled by: Rabinski	PM: Paulo Parra — Date: 26 July 2012
Contact:	Paulo Parra — Phone: (510) 266-4600	Special Instructions:	E-mail results to pparra@forensica.com and rvelasquez@forensica.com
Site:	Various SBSA	Turnaround Time:	1-Day ☐ 2-Day ☐ 3-Day ☑ 5-Day ☒ Other ☐ Due Date and Time:
Client No.:	C1114 — FACS Job #: PJ17441	Analysis:	☑ PLM Standard / ☐ Point Count / ☐ Flame AA (Pb) / ☐ Other:

Sample Number	Material Description	Sample Location	Friable	Cond.	Quantity
BL-A1	stucco	Exterior, E. side, S. end.	N	G	
BL-A2	mortar	Surface level, S. utility space, S. wall @ stairs, between cinderblocks	N	G	
BL-A3	mortar	Exterior, ~~side~~ E. side, center, between facade bricks	N	G	

WB – Wallboard JC - Joint Compound FT - Floor Tile FTM - Floor Tile Mastic BBM - Baseboard Mastic
RSF - Resilient Sheet Flooring CT - Ceiling Tile SAAM - Spray-Applied Acoustical Material WT - Wall Texture

Friable Yes / No — Good / Fair / Poor

Shipped via: ☐ Fed Ex ☐ Airborne ☐ UPS ☐ US Mail ☐ Courier ☐ Drop Off ☐ Other:

Relinquished by: Rabinski	*Date & Time:* 26 July 2012 / 1606	*Received by:*	*Date & Time:* 7-26-12 @ 4:15 pm Condition Acceptable ☑ Yes ☐ No
Relinquished by:	*Date & Time:*	*Received by:*	*Date & Time:* Condition Acceptable ☐ Yes ☐ No

Forensic Analytical Laboratories

Final Report

Metals Analysis of Paints

Forensic Analytical Consulting Svcs
Paulo Parra
3777 Depot Road
Suite 413
Hayward, CA 94545

Client ID: HAY01
Report Number: M131313
Date Received: 07/26/12
Date Analyzed: 08/02/12
Date Printed: 08/02/12
First Reported: 08/02/12

Job ID / Site: PJ17441; Various SBSA
Date(s) Collected: 7/26/12

FALI Job ID: HAY01
Total Samples Submitted: 6
Total Samples Analyzed: 6

Sample Number	Lab Number	Analyte	Result	Result Units	Reporting Limit*	Method Reference
BL-PB01	30440051	Pb	0.067	wt%	0.006	EPA 3050B/7420
BL-PB02	30440052	Pb	< 0.006	wt%	0.006	EPA 3050B/7420
BL-PB04	30440053	Pb	0.012	wt%	0.006	EPA 3050B/7420
BL-PB05	30440054	Pb	0.04	wt%	0.01	EPA 3050B/7420
BL-PB06	30440055	Pb	0.04	wt%	0.01	EPA 3050B/7420
BL-PB03	30440056	Pb	< 0.006	wt%	0.006	EPA 3050B/7420

* The Reporting Limit represents the lowest amount of analyte that the laboratory can confidently detect in the sample, and is not a regulatory level. The Units for the Reporting Limit are the same as the Units for the Final Results.

Daniele Siu

Daniele Siu, Laboratory Supervisor, Hayward Laboratory

3777 Depot Road, Suite 409, Hayward, CA 94545 / Telephone: (510) 887-8828 (800) 827-FASI / Fax: (510) 887-4218

Forensic Analytical
ENVIRONMENTAL HEALTH CONSULTANTS

BULK SAMPLE REQUEST FORM

Client:	HAY01 FACS San Francisco Brown and Caldwell	Sampled by: Rabzinski.	PM: Paulo Parra — Date: 26 July 2012
Contact:	Paulo Parra — Phone: (510) 266-4600	Special Instructions:	E-mail results to pparra@forensica.com and rvelasquez@forensica.com
Site:	Various SBSA	Turnaround Time:	1-Day ☐ 2-Day ☐ ~~3-Day~~ ☐ ~~5-Day~~ ☑ OK ↓ Other ☑ — Due Date and Time:
Client No.:	C1114 — FACS Job #: PJ17441	Analysis:	☐ PLM Standard / ☐ Point Count / ☑ Flame AA (Pb) / ☐ Other:

Sample Number	Material Description	Sample Location	Friable	Cond.	Quantity
BL-Pb01	white paint	roof, EA penetration, by muffler, NE quad	Y	P	
BL-Pb02	white paint	roof, parapet, roof side.	Y	F	
BL-Pb04	grey paint	South utility area, ~~level~~, 1st level down, floor	N	F	
BL-Pb05	grey paint	South utility area, 1st level down, W. pump housing	N	G	
BL-Pb06	white paint	South utility area, 1st level down, N. wall	N	G	
~~BL-P~~ BL-Pb03	grey paint	South utility area, ~~gre~~ diesel fuel tank	N	G	

WB – Wallboard JC - Joint Compound FT - Floor Tile FTM - Floor Tile Mastic BBM - Baseboard Mastic
RSF - Resilient Sheet Flooring CT - Ceiling Tile SAAM - Spray-Applied Acoustical Material WT - Wall Texture

Friable Yes / No — Good / Fair / Poor

Shipped via: ☐ Fed Ex ☐ Airborne ☐ UPS ☐ US Mail ☐ Courier ☐ Drop Off ☐ Other:

Relinquished by:	Date & Time:	Received by:	Date & Time:
Rabzinski.	26 July 2012 / 1607		7-26-12 @ 4:15 pm Condition Acceptable ☑ Yes ☐ No
Relinquished by:	Date & Time:	Received by:	Date & Time: Condition Acceptable ☐ Yes ☐ No

Final Report

Forensic Analytical Laboratories

Metals Analysis of Bulks

Forensic Analytical Consulting Svcs
Paulo Parra
3777 Depot Road
Suite 413
Hayward, CA 94545

Client ID: HAY01
Report Number: M131330
Date Received: 07/27/12
Date Analyzed: 07/30/12
Date Printed: 07/30/12
First Reported: 07/30/12

Job ID / Site: PJ17441; Various SBSA
Date(s) Collected: 7/26/12

FALI Job ID: HAY01
Total Samples Submitted: 1
Total Samples Analyzed: 1

Sample Number	Lab Number	Analyte	Result	Result Units	Reporting Limit*	Method Reference
BL-PB07	30440105	Pb	21	mg/kg	6	EPA 3050B/7420

* The Reporting Limit represents the lowest amount of analyte that the laboratory can confidently detect in the sample, and is not a regulatory level. The Units for the Reporting Limit are the same as the Units for the Final Results.

Daniele Siu

Daniele Siu, Laboratory Supervisor, Hayward Laboratory

3777 Depot Road, Suite 409, Hayward, CA 94545 / Telephone: (510) 887-8828 (800) 827-FASI / Fax: (510) 887-4218

Forensic Analytical
ENVIRONMENTAL HEALTH CONSULTANTS

PAINT CHIP SAMPLE REQUEST FORM

Client:	HAY01 FACS San Francisco Brown and Caldwell	Sampled by: Radzinski	PM: Paulo Parra — Date: 26 July 2012
Contact:	Paulo Parra — Phone: (510) 266-4600	Special Instructions:	E-mail results to pparra@forensica.com and rvelasquez@forensica.com
Site:	Various SBSA	Turnaround Time:	1-Day ☐ 2-Day ☐ 3-Day ☐ 5-Day ☑ Other ☐ Due Date and Time:
Client No.:	C1114 — FACS Job #: PJ17441	Analysis:	☑ Flame AA (Pb) / ☐ Other:

Sample Number	Sample Location	Component	Color	Substrate	Condition
BL-Pb07	Exterior, East wall, S. end	wall	tan	concrete	G

Substrate: wood metal concrete plaster drywall brick

Shipped via: ☐ Fed Ex ☐ Airborne ☐ UPS ☐ US Mail ☐ Courier ☐ Drop Off ☐ Other:

Relinquished by: Radzinski	*Date & Time:* 27 July 2012/1330	*Received by:* [illegible signature] D/O	*Date & Time:* 7/27/12 1:30PM Condition Acceptable ☒ Yes ☐ No
Relinquished by:	*Date & Time:*	*Received by:*	*Date & Time:* Condition Acceptable ☐ Yes ☐ No

Appendix D:

Certifications of FACS Personnel

State of California
Division of Occupational Safety and Health

Certified Asbestos Consultant

Wilson W Wong

Name

Certification No. **92-0791**

Expires on **01/29/13**

This certification was issued by the Division of Occupational Safety and Health as authorized by Sections 7180 et seq. of the Business and Professions Code.

State of California Department of Public Health

Lead-Related Construction Certificate

Certificate Type	Expiration Date
Inspector/Assessor	11/21/2012
Project Monitor	11/21/2012

12986

Wilson W. Wong

ID #: 4401

State of California
Division of Occupational Safety and Health
Certified Site Surveillance Technician

Peter James Radzinski
Name

Certification No. **05-3772**

Expires on **04/14/13**

This certification was issued by the Division of Occupational Safety and Health as authorized by Sections 7180 et seq. of the Business and Professions Code.

Forensic Analytical
ENVIRONMENTAL HEALTH CONSULTANTS

C13511 - Business Development

San Francisco	
PJ13238	Client Interface - San Francisco
PJ13244	Presentations - San Francisco
PJ13250	Organizations - San Francisco
PJ13256	Events - San Francisco (call for tradeshow PJ #'s)
PJ13262	Strategic Partners - San Francisco
PJ13232	Business Development - San Francisco (Other Internal)

3eonline.com User: KPEB Pass: MSDS | 1-877-894-9994 (toll free)

State of California Department of Public Health

Lead-Related Construction Certificate

Certificate Type	Expiration Date
Sampling Technician	08/07/2012

19726

Peter Radzinski

ID #: 5018

Forensic Analytical

ENVIRONMENTAL HEALTH CONSULTANTS

"The solution is in the FACS."

At Forensic Analytical Consulting Services (FACS) our mission is to leave our scientific fingerprint on every client we serve. We accomplish this by delivering data and expertise that is accurate, cost effective, and contextually useful in solving issues of public and environmental health.

Our expert teams are available to respond nationally to help resolve a broad range of chemical, physical and biological concerns:

California		***Nevada***	
Los Angeles	*310-668-5600*	*Las Vegas*	*702-784-0040*
Sacramento	*916-726-1303*	***Oregon***	
San Diego	*858-577-0455*	*Portland*	*503-595-1001*
San Francisco	*510-266-4600*		

www.forensicanalytical.com

This page intentionally left blank.

Attachment E: SBSA Four Pump Stations Hazardous Waste Inspection Report

January 7, 2013

Forensic Analytical

ENVIRONMENTAL HEALTH CONSULTANTS

January 7, 2013

To: Mr. Timothy Banyai
Brown and Caldwell
201 North Civic Center, Suite 515
Walnut Creek, CA 94596
TBanyai@brwncald.com

From: Mr. Paulo Parra
Forensic Analytical Consulting Services, Inc.
3777 Depot Road, Suite 413
Hayward, CA 94545
pparra@forensicanalytical.com
Phone: 510-266-4618

Subject: SBSA Four Pump Stations - Hazardous Waste Inspection

Dear Mr. Banyai,

Forensic Analytical Consulting Services (FACS) conducted an inspection for potentially hazardous waste associated with the South Bayside System Authority (SBSA) Menlo Park, Redwood City, San Carlos and Belmont pumps stations. The inspection was conducted at the request of Brown and Caldwell in support of planned renovation activities at these pump stations. The following is a summary of the items classified as suspect PCB-containing, Universal Waste and Other Hazardous Materials/Waste. Our visual inspection was conducted on October 29, 2012.

SBSA Menlo Park Pump Station Potentially Hazardous Waste
Suspect PCB-Containing Waste
• Electrical Switch Gear/Transformers (Wet Type)
• Fluorescent Light Fixture Ballasts
Universal Waste
• Lead Acid Batteries
• Light Bulbs/Tubes
• Miscellaneous Chemicals and Cleaning Supplies
Other Hazardous Materials/Waste
• Various Oils
• Oily Rags
• Diesel Fuel
• Generator (Oil, Fuel, Coolant)

SBSA Redwood City Pump Station Potentially Hazardous Waste
Suspect PCB-Containing Waste
• Electrical Switch Gear/Transformers (Wet Type)
• Fluorescent Light Fixture Ballasts
Universal Waste
• Lead Acid Batteries
• Light Bulbs/Tubes

• Miscellaneous Chemicals and Cleaning Supplies
Other Hazardous Materials/Waste
• Various Oils
• Oily Rags
• Diesel Fuel
• Generator (Oil, Fuel, Coolant)
• Sodium Hypochlorite

SBSA San Carlos Pump Station Potentially Hazardous Waste
Suspect PCB-Containing Waste
• Electrical Switch Gear/Transformers (Wet Type)
• Fluorescent Light Fixture Ballasts
Universal Waste
• Lead Acid Batteries
• Light Bulbs/Tubes
• Miscellaneous Chemicals and Cleaning Supplies
Other Hazardous Materials/Waste
• Various Oils
• Oily Rags
• Diesel Fuel
• Generator (Oil, Fuel, Coolant)
• Sodium Hypochlorite

SBSA Belmont Pump Station Potentially Hazardous Waste
Suspect PCB-Containing Waste
• Electrical Switch Gear/Transformers (Wet Type)
• Fluorescent Light Fixture Ballasts
Universal Waste
• Lead Acid Batteries
• Light Bulbs/Tubes
• Miscellaneous Chemicals and Cleaning Supplies
Other Hazardous Materials/Waste
• Various Oils
• Oily Rags
• Diesel Fuel
• Generator (Oil, Fuel, Coolant)
• Bio Hazard Waste

Suspect PCB-Containing materials should be sampled after energy isolation or assumed to contain PCBs. All regulated and hazardous waste should be properly packaged, labeled, transported and disposed of or recycled in accordance with all applicable federal, state and local regulations.

Please do not hesitate to contact our office at 510-266-4600 if you have any additional questions or concerns. Thank you for the opportunity to assist Brown and Caldwell in promoting a more healthful environment.

Best Regards,
Forensic Analytical Consulting Services, Inc.

Paulo Parra
Project Manager

This page intentionally left blank.

Appendix B: South Bayside System Authority Pre-design of Planned Pump Stations, Redwood City, San Carlos, and Menlo Park, Geotechnical Data Report

Jacobs Associates, October 22, 2013

This page intentionally left blank.

South Bayside System Authority
Pre-design of Planned Pump Stations
Redwood City, San Carlos and Menlo Park, California

Geotechnical Data Report

October 22, 2013

Prepared for:

Brown and Caldwell

Prepared by:

JACOBS ASSOCIATES
Engineers/Consultants

1350 Treat Boulevard, Suite 100
Walnut Creek, CA 94597

Distribution

To: Charlie Joyce

Brown and Caldwell
201 N. Civic Drive, Suite 115
Walnut Creek, CA 94596

From: Robert Kahl, GE, CE
Jacobs Associates

RAK

REGISTERED PROFESSIONAL ENGINEER
ROBERT A. KAHL
RAK
NO. 38310
EXP. 3/31/15
CIVIL
STATE OF CALIFORNIA

REGISTERED PROFESSIONAL ENGINEER
ROBERT A. KAHL
RAK
NO. 2254
EXP. 3/31/15
GEOTECHNICAL
STATE OF CALIFORNIA

Table of Contents

List of Tables

List of Figures

List of Appendices

Appendix A – Legends

Appendix B – Boring Logs

Appendix C – Laboratory Test Results

Appendix D – Reference Boring Logs

1 Introduction

This geotechnical data report is for pre-design of the following planned South Bayside System Authority (SBSA) Pump Stations and for a gravity sewer between the Belmont Pump Station and the San Carlos Pump Station (herein referred to as the Belmont Gravity Sewer):

- PS1 (Menlo Park P.S.)
- PS2 (Redwood City P.S.)
- PS3 (San Carlos P.S.)

Site maps of the project are provided in Figures 1 through 4.

2 Geotechnical Field Investigation and Laboratory Testing

2.1 Project Test Borings

Six project test borings were drilled for the project. Boring B-1 was drilled at the PS3 to a depth of 50 feet on June 25, 2012 (see Figure 1). Boring B-2 was drilled at the PS2 to a depth of 50 feet on June 25, 2012 (see Figure 2). Borings B-3, B-4, and B-5 were drilled to depths ranging from 25 feet to 45 feet along Shoreway Road for the Belmont Gravity Sewer on July 16 and 17, 2013 (see Figure 3). Boring 6 was drilled at the PS1 to a depth of 50 feet on July 16, 2013 (see Figure 4).

The boring log legends and boring logs are provided in Appendices A and B. The borings were drilled with a truck-mounted CME 75 drill rig using 8-inch-diameter continuous flight hollow-stem augers. Soil and groundwater conditions were logged and representative soil samples were obtained from the borings. Relatively undisturbed soil samples were obtained by driving a 2.5-inch-inside-diameter, 3.0-inch-outside-diameter, Modified California Sampler (MCS) containing brass liners, into the bottom of the borings at the depths indicated on the logs. Disturbed soil samples were obtained by driving a 1.4-inch-inside-diameter, 2.0-inch-outside-diameter Standard Penetration Test (SPT) sampler (ASTM D1586) into the bottom of the borings at the depths indicated on the logs. A 140-pound hammer falling 30 inches per blow was used to drive all samplers. The number of blows required to drive the samplers the last 12 inches of an 18-inch drive are recorded on the boring logs as penetration resistance. The penetration resistance values (blows/ft) recorded for SPT sampler drives on the boring logs are actual American Society for Testing and Materials (ASTM) D1586 N-values. The penetration resistance values recorded on the boring logs for MCS sampler drives are field blow counts for the MCS sampler that have not been reduced to equivalent SPT N-values. Soil samples retrieved from the borings were examined for classification, logged, and sealed to preserve their natural moisture content for laboratory testing. Classification systems used to log the soils are provided in Appendix A. Descriptions of soils provided on the boring logs are based on observations during drilling and sampling and on the results of laboratory tests.

A partial summary of selected data from the test borings is provided in Table 1.

Table 1. Partial Summary of Selected Test Boring Data

Pump Station	Test Boring[1]	Drilling Date (m.d.y)	Total Depth (ft)	Groundwater Depth[2] (ft)	Pavement (inches)[3]	
					Asphalt Concrete	Aggregate Base
PS3 (San Carlos P.S)	B-1	06.25.12	50	9 (9)	3	12
PS2 (Redwood P.S)	B-2	06.25.12	50	14.5 (14.5)	3	12
Belmont Gravity Sewer	B-3	07.17.13	25	19 (11)	3	10
	B-4	07.17.13	35	18 (8)	3	N/E
	B-5	07.16.13	45	27 (7)	N/E	N/E
PS1 (Menlo Park P.S.)	B-6	07.16.13	50	12 (5)	3	5

[1] See logs in Appendix B. Mapped location of test borings provided in Figures 1 through 4.
[2] Represents depth below ground surface that groundwater was first encountered during drilling. Numbers in parentheses represent measured depth to groundwater at end of drilling. Neither depth necessarily reflects the static equilibrium groundwater level. The depth of static equilibrium groundwater level is unknown.
[3] Boring B-4 was drilled in asphaltic concrete driveway and did not encounter base rock. Boring B-5 was drilled in landscaped area.

2.2 Laboratory Tests Results

Moisture content, unit weight, Atterberg limits, grain size analysis, hydrometer w/sieve analysis, unconfined compression, direct shear tests, consolidation, and corrosion tests were performed on soil samples retrieved from the test borings to evaluate their physical characteristics and engineering properties. The results of the tests are included on the boring logs in Appendix B and on laboratory test result figures in Appendix C.

2.3 Previous Geotechnical Investigations

Boring logs from former geotechnical engineering investigations by others on or adjacent to the pump station sites and on or adjacent to the Belmont Gravity Sewer alignment are included in this data report for reference (see Appendix D). The locations of the reference boring are shown on Figures 1 through 4.

3 Limitations

This data report has been prepared for the exclusive use of Brown and Caldwell and SBSA for the Pre-design of SBSA Pump Stations in City of Menlo Park, Redwood City and City of San Carlos, and the Belmont Gravity Sewer between Belmont and San Carlos Pump Stations. The geotechnical data obtained for this report was gathered based on the project scope and information provided to us by Brown and Caldwell at the time of our field work. Subsurface conditions may vary between exploration locations and with time; as a result, conditions that differ from those summarized in the report and that are unanticipated can and do occur. Jacobs Associates is not responsible for the interpretation of the data contained in this report by anyone; as such interpretations are dependent on each person's subjectivity.

The geotechnical data was gathered and this report was completed within the limitations of Jacobs Associates' approved scope of work, schedule, and budget. Studies for the absence or existence of soil and groundwater contamination in the project areas are not part of our scope of services for this project, but should be addressed by others as part of project design.

The services rendered by Jacobs Associates have been performed in a manner consistent with the level of care and skill ordinarily exercised by members of the profession currently practicing under similar conditions in the same area. Jacobs Associates is not responsible for the use of this report in connection with anything other than the project and the locations described herein.

Figures

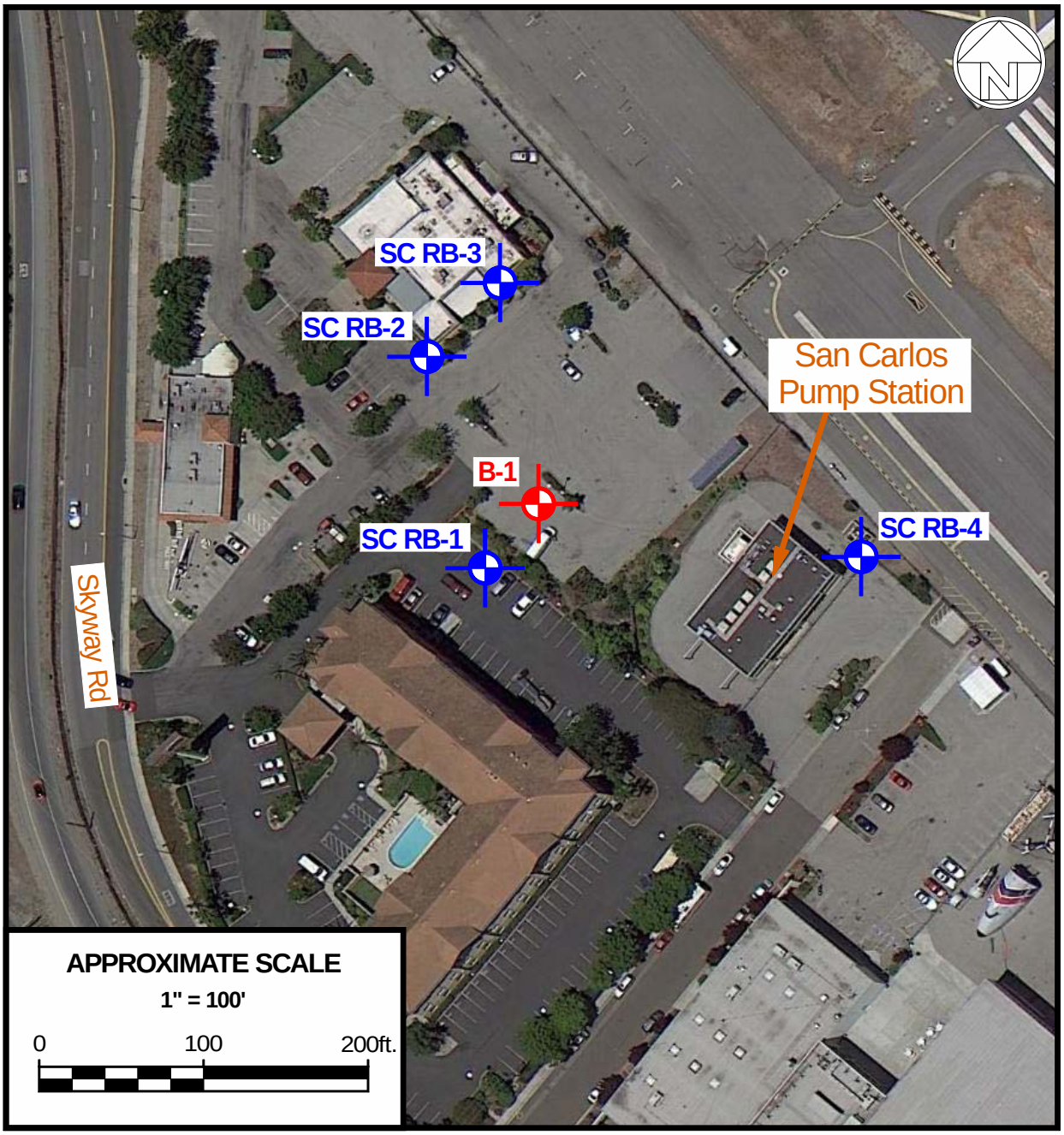

LEGEND:

B-1 - Approximate location and reference number for project geotechnical borings.

SC RB-1 - Approximate location and reference number for San Carlos Pump Station reference borings (see Appendix D).

JACOBS ASSOCIATES
Engineers/Consultants

File No. 4520.0 | October 2013

Brown and Caldwell
South Bayside System Authority
Pump Station Predesign
San Carlos, California

PS3 (San Carlos PS) and Boring Location Map

Figure
1

LEGEND:

B-2 - Approximate location and reference number for project geotechnical borings (See Appendix B).

RC RB-1 - Approximate location and reference number for Redwood City Pump Station reference borings (see Appendix D).

JACOBS ASSOCIATES
Engineers/Consultants

File No. 4520.0 | October 2013

Brown and Caldwell
SBSA Pump Station Predesign
Pump Station Predesign
Redwood City, California

PS2 (Redwood City P.S.) and Boring Location Map

Figure
2

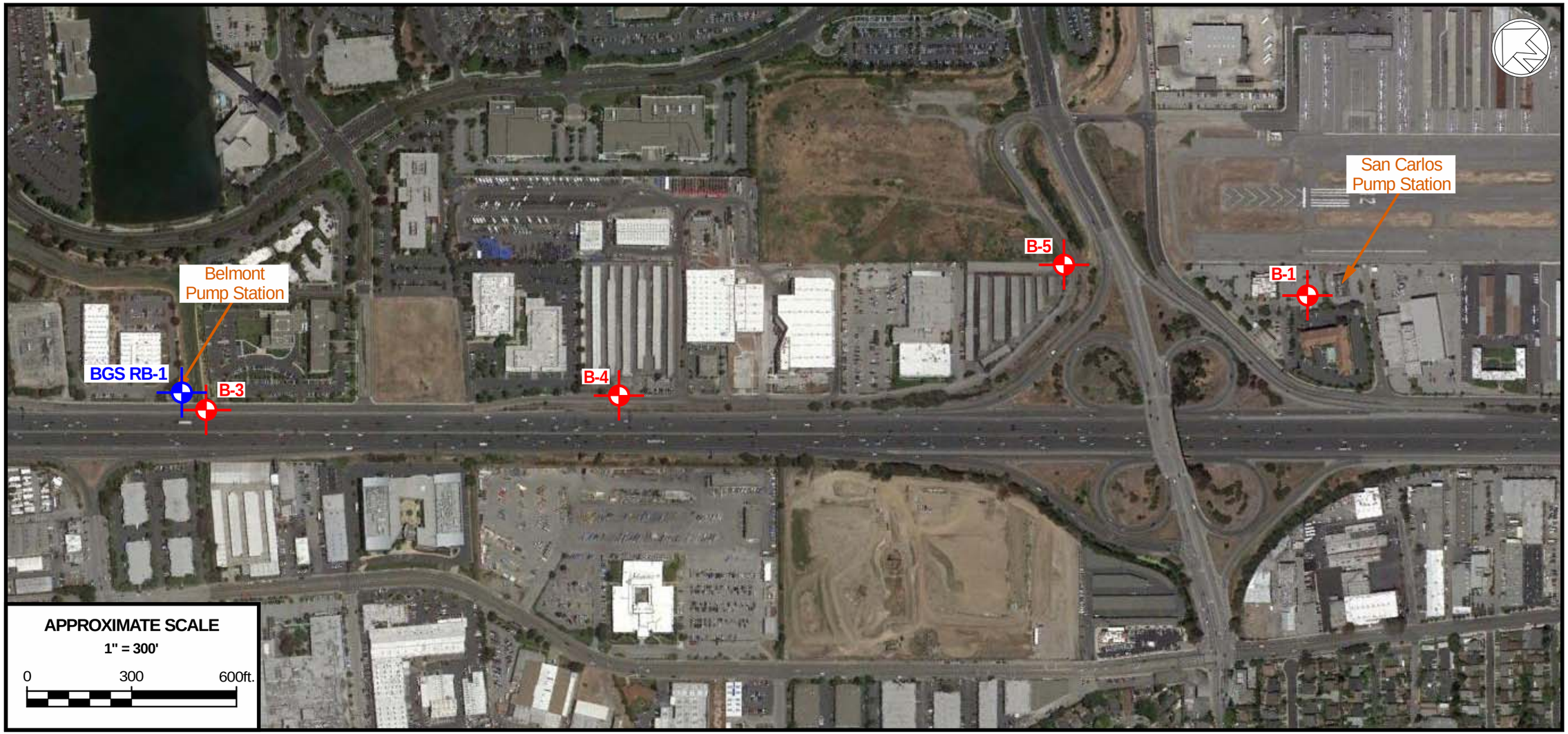

LEGEND:

B-3 - Approximate location and reference number for project geotechnical borings (See Appendix B).

BGS RB-1 - Approximate location and reference number for Belmont Graivty Sewer reference boring (see Appendix D).

JACOBS ASSOCIATES
Engineers/Consultants

File No. 4520.0 | October 2013

Brown and Caldwell
South Bayside System Authority
Pump Station Predesign
San Carlos, California

Belmont Gravity Sewer and Boring Location Map

Figure
3

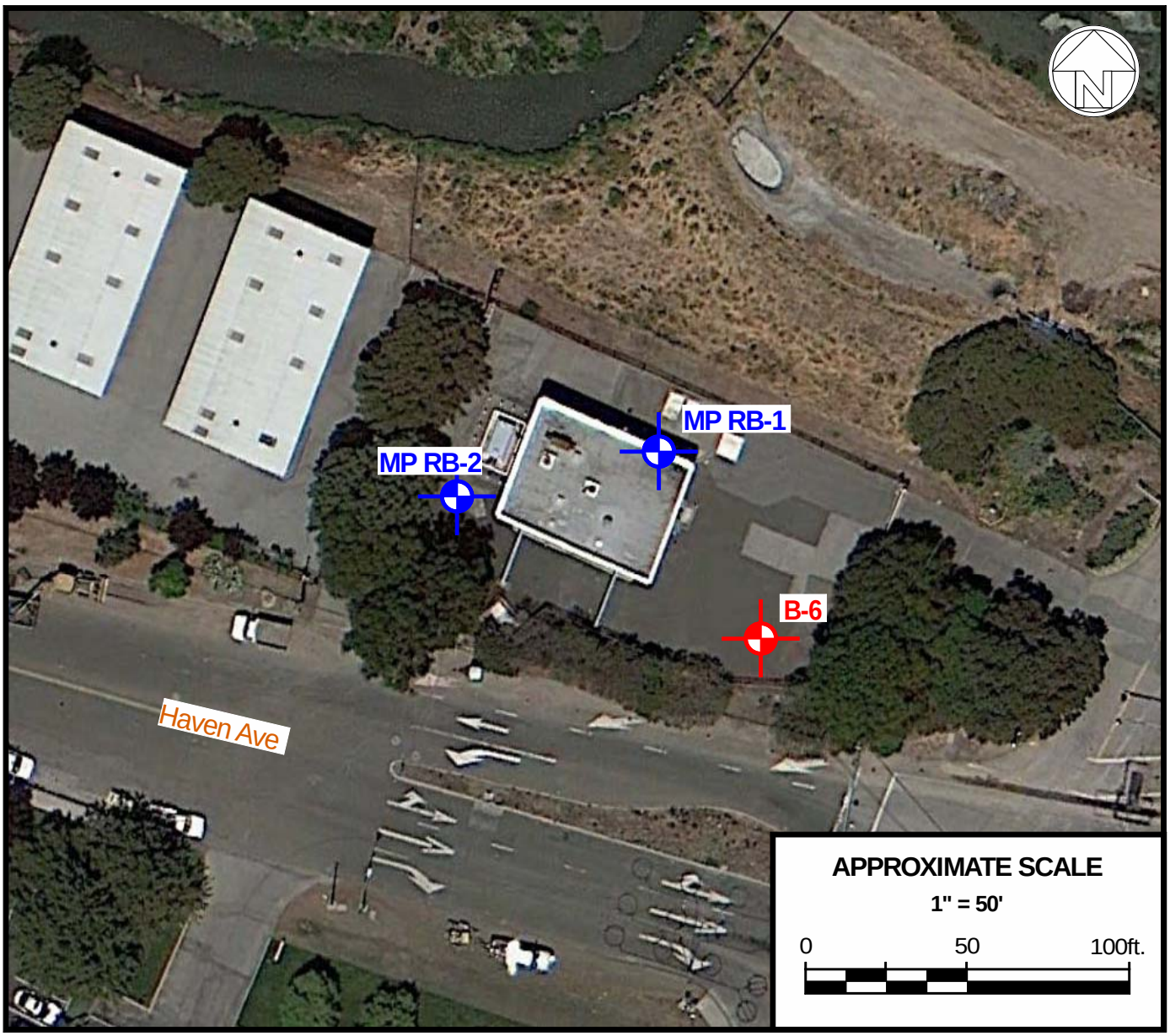

LEGEND:

B-6 - Approximate location and reference number for project geotechnical borings (see Appendix B).

MP RB-1 - Approximate location and reference number for Menlo Park Pump Station reference borings (see Appendix D).

JACOBS ASSOCIATES
Engineers/Consultants

File No. 4520.0 | October 2013

Brown and Caldwell
South Bayside System Authority
Pump Station Predesign
Menlo Park, California

PS1 (Menlo Park PS) and Boring Location Map

Figure
4

Appendix A

KEY TO BORING LOGS

- Shelby tube sample
- Grab sample
- 1.4" I.D./2" O.D. Standard Penetration Test (ASTM D1586) sampler (SPT)
- 2.5" I.D./3" O.D. Modified California sampler (MCS) with brass liners
- 2" I.D./2.5" O.D. Split Spoon sampler (SSS)

NSR No sample recovery

PP Pocket Penetrometer (tsf = tons per square foot)

Groundwater level observed in boring at end of drilling unless noted otherwise. Not to be interpreted as the equilibrium groundwater level.

Groundwater seepage encountered during drilling.

Planned pipeline I.D. (projected to boring)

RELATIVE DENSITY		CONSISTENCY		
SANDS AND GRAVELS	SPT, N	SILTS AND CLAYS	SPT, N	UNCONFINED COMPRESSIVE STRENGTH, tsf
VERY LOOSE	0-4	VERY SOFT	0-2	0-0.25
LOOSE	4-10	SOFT	2-4	0.25-0.50
MEDIUM DENSE	10-30	MEDIUM STIFF	4-8	0.50-1.00
DENSE	30-50	STIFF	8-15	1.00-2.00
VERY DENSE	50+	VERY STIFF	15-30	2.00-4.00
		HARD	30+	>4.00

Reference: Terzaghi, K. and Peck, R., SOIL MECHANICS IN ENGINEERING PRACTICE, 2nd ed., John Wiley and Sons, New York, 1967. Page 341 Table 45.1 and page 347 Table 45.2.

MOISTURE CONDITION

DESCRIPTION	CRITERIA
DRY	Absence of moisture, dusty, dry to the touch
MOIST	Damp but no visible water
WET	Visible free water, usually soil is below water table

Reference: ASTM D2488, Table 3 - Criteria for Describing Moisture Condition

CONSTITUENT DESCRIPTIONS

DESCRIPTION	CRITERIA
TRACE	less than 5%
FEW	5% to 10%
LITTLE	15% to 25%
SOME	30% to 45%
MOSTLY	50% to 100%

Reference: ASTM D2488, Note 15

NOTES:

1. Lines separating strata in the logs represent approximate boundaries only and are dashed where strata change depth is less certain and queried where strata change depth is not known. Actual strata change may be gradual. No warranty is provided as to the continuity of strata between borings. Logs represent the subsurface section observed at the boring location on the date of drilling only.
2. Penetration resistance (blows/ft.) are the last 12" of an 18" drive or the middle 12" of a 24" drive using a 140-pound hammer falling 30 inches per blow (Mobile B-24 rig) unless noted otherwise. The penetration resistance values noted on the logs are actual blows per foot of penetration for the respective sampler type (i.e., MCS sampler penetration resistance has not been reduced to an equivalent SPT "N" value).
3. Where noted on the boring logs, slough is defined as material from the bore hole walls which collapses or flows into and partially fills the bore hole on removal of the hollow stem auger plug or solid stem augers. The presence of slough within the bore hole can render drive sampling impossible (samplers fill entirely with slough) and invalidate the blow count.
4. Where noted on the boring logs, groundwater seepage is defined as the depths at which groundwater was first observed in project exploratory borings during drilling.

JACOBS ASSOCIATES
Engineers/Consultants

File No. 4520.0 | October 2013

Brown and Caldwell
South Bayside System Authority
Pump Station Predesign
San Mateo County, California
Boring Log Legend

Figure
A-1
(1 of 2)

UNIFIED SOIL CLASSIFICATION SYSTEM

CRITERIA FOR ASSIGNING GROUP SYMBOLS AND GROUP NAMES [A]				GROUP SYMBOL	GROUP NAME [B]
COARSE-GRAINED SOILS More than 50% retained on No. 200 sieve	**GRAVELS** More than 50% of coarse fraction retained on No. 4 sieve	**Clean Gravels** < 5% fines [C]	Cu ≥ 4 and 1 < Cc < 3 [E]	**GW**	Well-graded gravel [F]
			Cu < 4 and/or 1 > Cc > 3 [E]	**GP**	Poorly graded gravel [F]
		Gravels with Fines > 12% fines [C]	Fines classify as ML or MH	**GM**	Silty gravel [F,G,H]
			Fines classify as CL or CH	**GC**	Clayey gravel [F,G,H]
	SANDS 50% or more of coarse fraction passes No. 4 sieve	**Clean Sands** < 5% fines [D]	Cu ≥ 6 and 1 < Cc < 3 [E]	**SW**	Well-graded sand [I]
			Cu < 6 and/or 1 > Cc > 3 [E]	**SP**	Poorly graded sand [I]
		Sands with Fines > 12% fines [D]	Fines classify as ML or MH	**SM**	Silty sand [G,H,I]
			Fines classify as CL or CH	**SC**	Clayey sand [G,H,I]
FINE-GRAINED SOILS 50% or more passes the No. 200 sieve	**SILTS AND CLAYS** Liquid limit < 50	**Inorganic**	PI > 7 plots on or above "A" line [J]	**CL**	Lean clay [K,L,M]
			PI < 4 plots below "A" line [J]	**ML**	Silt [K,L,M]
		Organic	Liquid limit-oven dried / Liquid limit-not dried < 0.75	**OL**	Organic Clay [K,L,M,N]
					Organic Silt [K,L,M,O]
	SILTS AND CLAYS Liquid limit > 50	**Inorganic**	PI plots on or above "A" line	**CH**	Fat clay [K,L,M]
			PI plots below "A" line	**MH**	Elastic silt [K,L,M]
		Organic	Liquid limit-oven dried / Liquid limit-not dried < 0.75	**OH**	Organic Clay [K,L,M,P]
					Organic Silt [K,L,M,Q]
HIGHLY ORGANIC SOILS		**Primarily organic matter, dark color and organic odor**		**PT**	Peat

NOTES:

A Based on the material passing the 3-in. (75mm) sieve.

B If field sample contained cobbles or boulders, or both, add "with cobbles or boulders, or both" to group name.

C Gravels with 5% to 12% fines require dual symbols:
GW-GM well-graded gravel with silt
GW-GC well-graded gravel with clay
GP-GM poorly graded gravel with silt
GP-GC poorly graded gravel with clay

D Sands with 5% to 12% fines require dual symbols:
SW-SM well-graded sand with silt
SW-SC well-graded sand with clay
SP-SM poorly graded sand with silt
SP-SC poorly graded sand with clay

E $Cu = \frac{D_{60}}{D_{10}}$ $Cc = \frac{(D_{30})^2}{D_{10} \times D_{60}}$

F If soil contains ≥ 15% sand, add "with sand" to group name.

G If fines classify as CL-ML, use dual symbol GC-GM, or SC-SM.

H If fines are organic, add "with organic fines" to group name.

I If soil contains ≥ 15% gravel, add "with gravel" to group name.

J If Atterberg limits plot in hatched area, soil is a CL-ML (silty clay).

K If soil contains 15% to 29% plus No. 200, add "with sand" or "with gravel", whichever is predominant.

L If soil contains ≥ 30% plus No.200, predominantly sand, add "sandy" to group name.

M If soil contains ≥ 30% plus No.200, predominantly gravel, add "gravelly" to group name.

N PI ≥ 4 and plots on or above "A" line.

O PI < 4 or plots below "A" line.

P PI plots on or above "A" line.

Q PI plots below "A" line.

JACOBS ASSOCIATES
Engineers/Consultants

File No. 4520.0 | October 2013

Brown and Caldwell
South Bayside System Authority
Pump Station Predesign
San Mateo County, California
Boring Log Legend

Figure
A-1
(2 of 2)

Appendix B

LOG OF BORING B-1 ①

LOCATION: Proposed PS3 (see Figure 1).

GROUND SURFACE: Approx. El. 106' ④

DEPTH feet	SAMPLE NO.	TYPE	PENETRATION RESISTANCE blows/ft.	③ GROUNDWATER	DESCRIPTION ②	MOISTURE %	DRY DENSITY lbs./ft.³	LIQUID LIMIT	PLASTICITY INDEX	GRAIN SIZE Gravel (>#4 sieve) %	GRAIN SIZE Sand (#4 to #200 sieve) %	GRAIN SIZE Fines (<#200 sieve) %	UNCONFINED COMPRESSIVE STRENGTH kips/ft.²	DIRECT SHEAR Cohesion p.s.f.	DIRECT SHEAR Internal Friction Angle
					Hotel Parking Lot: 3 inches asphalt concrete 12 inches aggregate base										
	1		22		**FILL - CLAYEY SAND (SC) to SANDY LEAN CLAY (CL)** - multicolored (olive brown, yellow brown, grey) - fine to coarse grained sand - trace to few gravel - medium dense/stiff - moist	16	116			10	43	47			
	2		11												
5															
	3		16		**PEAT (OH)** - black - dry to moist - organic - woody	166	22								
	4		2	▼		90		116	65						
10					**ORGANIC CLAY (OH) - YOUNG BAY MUD** - very dark green gray - peaty - high plasticity - soft - wet										
	5		4			89	50						0.97		
	6		5												
15															
	7		21		**LEAN CLAY (CL) and LEAN TO FAT CLAY (CL/CH)** - interlayered - dark grey (16.5 to 17.5 feet) - olive brown to light olive brown - medium to high plasticity - trace fine sand - stiff to medium stiff - wet	23	103								
	8		8					30	13						
20															
	9		15		**LEAN TO FAT CLAY (CL/CH)** - olive brown to light olive brown with black streaks - medium to high plasticity - stiff - wet	28	97						3.67		
	10		8												
25															
					BORING CONTINUED AT 27 FEET ON FIGURE B-1 (2 OF 2)										

CORROSION TEST
Sample B1-3
See Figure C-6

NOTES
① Drilled 6/25/2012 using a CME 75, 8" diameter hollow stem augers, and a 30" drop by 140 lb. automatic sampling hammer.
② See report text and plates in Appendices A and C for definitions, lab test results, and additional soil descriptions.
③ Free groundwater level encountered at 9 feet during and after drilling. Static equilibrium groundwater depth is unknown.
④ Surface elevation estimated from topographic map of PS3 (San Carlos P.S.) site by Brown and Caldwell (email dated 10/21/2013).

JACOBS ASSOCIATES
Engineers/Consultants

File No. 4520.0 | October 2013

Brown and Caldwell
South Bayside Authority System
Pump Station Predesign
San Mateo County, California
Log of Boring B-1

Figure
B-1
(1 of 2)

LOG OF BORING B-1 (continued)①

DEPTH feet	SAMPLE NO.	TYPE	PENETRATION RESISTANCE blows/ft.	③GROUNDWATER	DESCRIPTION ②	MOISTURE %	DRY DENSITY lbs./ft.³	LIQUID LIMIT	PLASTICITY INDEX	GRAIN SIZE Gravel (>#4 sieve) %	GRAIN SIZE Sand (#4 to #200 sieve) %	GRAIN SIZE Fines (<#200 sieve) %	UNCONFINED COMPRESSIVE STRENGTH kips/ft.²	DIRECT SHEAR Cohesion p.s.f.	DIRECT SHEAR Internal Friction Angle
					BORING CONTINUED FROM 27 FEET FROM FIGURE B-1 (1 OF 2)										
					FAT CLAY (CH) - light yellow brown to yellow - few fine-grained sand - stiff - wet							FINES 35% Silt 54% Clay			
	11		14			24	105			0	11	89		530	14°
	12		10					53	30						
30															
	13		11			27	98								
	14		12		- trace fine gravel-sized concretions										
35															
	15		23		**LEAN CLAY (CL)** - dark greenish gray - few sand and fine gravel - medium plasticity - stiff to very stiff - wet	19	115						3.64		
	16		14					43	22						
40															
	17		25		**FAT CLAY (CH)** - olive and greenish gray - few sand and fine gravel - medium plasticity - stiff to very stiff - wet	24	105						3.67		
	18		12												
45															
	19		19			32	94						2.99		
	20		13												
50					**BOTTOM OF BORING AT 50 FEET**										

CONSOLIDATION TEST
SAMPLE B1-13
C_C = 0.29
P_C = 4.80 ksf
See Figure C-5 (1 of 4)

NOTES
① See notes on Figure B-1 (1 of 2) for descriptions and details.

JACOBS ASSOCIATES
Engineers/Consultants

File No. 4520.0 | October 2013

Brown and Caldwell
South Bayside System Authority
Pump Station Predesign
San Mateo County, California
Log of Boring B-1 (continued)

Figure
B-1
(2 of 2)

LOG OF BORING B-2①

LOCATION: PS2 (see Figure 2).

GROUND SURFACE: Approx. El. 107'④

DEPTH feet	SAMPLE NO.	TYPE	PENETRATION RESISTANCE blows/ft.	③GROUNDWATER	DESCRIPTION ②	MOISTURE %	DRY DENSITY lbs./ft.³	LIQUID LIMIT	PLASTICITY INDEX	GRAIN SIZE Gravel (>#4 sieve) %	GRAIN SIZE Sand (#4 to #200 sieve) %	GRAIN SIZE Fines (<#200 sieve) %	UNCONFINED COMPRESSIVE STRENGTH kips/ft.²	DIRECT SHEAR Cohesion p.s.f.	DIRECT SHEAR Internal Friction Angle
					Pavement Section: 3 inches asphalt concrete 12 inches aggregate base										
5	1		8		**FILL - LEAN TO FAT CLAY (CL/CH)/CLAYEY SAND (CS)** - multicolored (olive grey, dark olive grey) - fine to coarse grained sand - few fine to coarse gravel - medium stiff/loose - moist	18				5	45	50			
	2		12		**FAT CLAY (CH)** - green black clay - high plasticity - trace sand - medium siff - moist	38	85						1.85		
10	3		19		**FAT CLAY (CH)** - olive brown mottled yellow brown - high plasticity - stiff - moist to wet	27	100						3.86		
15	4		14	▼	**SANDY LEAN CLAY (CL)** - greenish grey mottled yellow brown - medium plasticity - some sand and few fine gravel - stiff -wet	27		41	21	9	31	60			
	5		22												
20	6		17		**SILTY SAND (SM)** - grey with multicolors - cohesionless - fine to coarse sand and fine gravel - rounded to subrounded - medium dense -wet	19				22	65	13			
	7		11		- possible sand slough between 22 and 23.5 feet					0	91	11			
25	8		8		**SANDY FAT CLAY (CH)** - olive brown to light olive brown with black streaks - medium to high plasticity - little fine to coarse sand and trace fine gravel - stiff - wet	21		51	27	3	30	67			
					BORING CONTINUED AT 27 FEET ON FIGURE B-2 (2 OF 2)										

CORROSION TEST
Sample B2-3
See Figure C-6

FINES
7% Silt
6% Clay

FINES
5% Silt
6% Clay

NOTES
① Drilled 6/25/2012 using a CME 75, 8" diameter hollow stem augers, and a 30" drop by 140 lb. automatic sampling hammer.
② See report text and plates in Appendices A and C for definitions, lab test results, and additional soil descriptions.
③ Free groundwater level encountered at 14.5 feet during and after drilling. Static equilibrium groundwater depth is unknown
④ Surface elevation estimated from topographic map of PS2 (Redwood city P.S.) site provided by Brown and Caldwell (2013).

JACOBS ASSOCIATES
Engineers/Consultants

File No. 4520.0 | October 2013

Brown and Caldwell
South Bayside System Authority
Pump Station Predesign
San Mateo County, California
Log of Boring B-2

Figure
B-2
(1 of 2)

LOG OF BORING B-2 (continued)①

DEPTH feet	SAMPLE NO.	TYPE	PENETRATION RESISTANCE blows/ft.	③GROUNDWATER	DESCRIPTION ②	MOISTURE %	DRY DENSITY lbs./ft.³	LIQUID LIMIT	PLASTICITY INDEX	GRAIN SIZE Gravel (>#4 sieve) %	GRAIN SIZE Sand (#4 to #200 sieve) %	GRAIN SIZE Fines (<#200 sieve) %	UNCONFINED COMPRESSIVE STRENGTH kips/ft.²	DIRECT SHEAR Cohesion p.s.f.	DIRECT SHEAR Internal Friction Angle
					BORING CONTINUED FROM 27 FEET FROM FIGURE B-2 (1 OF 2)										
					CLAYEY SAND TO SANDY FAT CLAY (SC/CH) - grey mottled olive brown - fine to coarse sand - high plasticity clay - stiff - wet - possible 6 inches of slough between 27 and 27.5 feet consisting WELL-GRADED SAND (SW).										
	9		13			20	110			1	48	51		310	32°
30	10		13												
					CLAYEY SAND (SC) TO SANDY CLAY (CH) - grey mottled olive brown - high plasticity clay - fine sand - wet - possible 12 inches of slough between 32 and 33 feet consisting of WELL-GRADED SAND WITH SILT (SW-SM (see gradation)										
	11		13			17	112			1	87	12			
	12		41			22				0	19	81			
35															
					LEAN CLAY (CL) - dark greenish gray - medium plasticity - wet - few sand and fine gravel - stiff to very stiff										
	13		18			31	94						1.32		
	14		15			22		36	18						
40															
					FAT CLAY (CH) - olive and greenish gray - few sand and fine gravel - medium plasticity - stiff to very stiff - wet										
	15		25			20	113						4.54		
	16		12												
45															
	17		19			21	107								
	18		13			34									
50					**BOTTOM OF BORING AT 50 FEET**										

Gradation of possible slough

CONSOLIDATION TEST
SAMPLE B2-11
C_C = 0.06
P_C = 3.16 ksf
See Figure C-5 (2 of 4)

FINES
24% Silt
27% Clay

FINES
51% Silt
30% Clay

NOTES
① See notes on Figure B-2 (1 of 2) for descriptions and details.

JACOBS ASSOCIATES
Engineers/Consultants

File No. 4520.0 | October 2013

Brown and Caldwell
South Bayside System Authority
Pump Station Predesign
San Mateo County, California
Log of Boring B-2 (continued)

Figure
B-2
(2 of 2)

LOG OF BORING B-3 ①

LOCATION: Proposed Belmont Gravity Sewer. (see Figure 3).

GROUND SURFACE: Approx. El. 108' ④

DEPTH feet	SAMPLE NO.	TYPE	PENETRATION RESISTANCE blows/ft.	③ GROUNDWATER	DESCRIPTION ②	MOISTURE %	DRY DENSITY lbs./ft.³	LIQUID LIMIT	PLASTICITY INDEX	GRAIN SIZE Gravel (>#4 sieve) %	GRAIN SIZE Sand (#4 to #200 sieve) %	GRAIN SIZE Fines (<#200 sieve) %	UNCONFINED COMPRESSIVE STRENGTH kips/ft.²	DIRECT SHEAR Cohesion p.s.f.	DIRECT SHEAR Internal Friction Angle
					Shoreway Rd: 3 inches asphalt concrete 10 inches aggregate base										
	1		16		**SANDY LEAN CLAY (CL) - FILL** - yellowish/reddish brown - fine to coarse sand, few fine to coarse gravel - stiff - moist	16	109								
5															
	2		5		**FAT CLAY WITH SAND (CH)** - dark grayish blue - little fine sand grades to trace fine sand with depth - soft - moist										
10															
	3		10		**FAT CLAY (CH) WITH SAND** - black with olive brown mottling - trace coarse sand - medium stiff to stiff - moist	28	95			0	19	81	1.29		
	4		9												
15															
	5		28		**SANDY LEAN CLAY (CL)** - grayish brown - fine sand, fine to coarse sand with depth - trace fine gravel - little silt - stiff - moist to wet	16	105			0	47	53		260	35°
	6		13												
20															
	7		25		**LEAN CLAY (CL)** - olive brown to olive gray - few fine sand and silt to trace fine sand and silt - stiff to very stiff - moist	22	105	33	16				1.97		
	8		26												
25					**BOTTOM OF BORING AT 25 FEET**										

FINES: 47% Silt, 34% Clay

FINES: 31% Silt, 22% Clay

NOTES
① Drilled 07/17/13 using a CME 75, 8" diameter hollow stem augers, and a 30" drop by 140 lb. automatic sampling hammer.
② See report text and figures in Appendices A and C for definitions, lab test results, and additional soil descriptions.
③ Groundwater seepage measured at 19' during drilling and 11' at end of drilling. Static equilibrium groundwater depth is unknown.
④ Surface elevation estimated from map of Shoreway Road by Freyer & Laureta, dated 9/10/13.

JACOBS ASSOCIATES
Engineers/Consultants

File No. 4520.0 | October 2013

Brown and Caldwell
South Bayside System Authority
Pump Station Predesign
San Mateo County, California
Log of Boring B-3

Figure
B-3

LOG OF BORING B-4 ①

LOCATION: Proposed Belmont Gravity Sewer (see Figure 2).

GROUND SURFACE: Approx. El. 104' ④

DEPTH feet	SAMPLE NO.	TYPE	PENETRATION RESISTANCE blows/ft.	③ GROUNDWATER	DESCRIPTION ②	MOISTURE %	DRY DENSITY lbs./ft.³	LIQUID LIMIT	PLASTICITY INDEX	GRAIN SIZE Gravel (>#4 sieve) %	GRAIN SIZE Sand (#4 to #200 sieve) %	GRAIN SIZE Fines (<#200 sieve) %	UNCONFINED COMPRESSIVE STRENGTH kips/ft.²	DIRECT SHEAR Cohesion p.s.f.	DIRECT SHEAR Internal Friction Angle
					Parking Lot at 145 Shoreway Rd: 3 inches asphalt concrete										
					SANDY LEAN CLAY WITH GRAVEL (CL) - FILL - brown - fine to coarse sand, fine to coarse gravel - dry to moist										
5	1		2		**FAT CLAY (CH) - BAY MUD** - grayish blue to dark grayish blue - few fine sand to trace fine sand with depth - very soft - moist - black CH from 4' to 5'	92	45								
	2		1	▼	- strong sulfurous odor at 8' - trace organics at 8'	107	41	148	113						
10					**FAT CLAY (CH)** - bluish gray with black mottling - trace to few sand, trace fine gravel - medium stiff - moist										
	3		11			22	107						0.21		
					LEAN/FAT CLAY (CL/CH) WITH SAND - olive gray with grayish blue mottling - few fine to coarse sand, trace fine gravel - stiff - moist										
15	4		13							0	28	72			
													FINES 39% Silt 33% Clay		
	5		15	▽	**LEAN/FAT CLAY WITH SAND (CL/CH)** - olive gray/olive brown with light gray mottling - fine sand and silt, few fine gravel - stiff - moist	17	116						2.21		
20	6		9										CORROSION TEST Sample B4-6 See Figure C-6		
	7		24		**FAT CLAY (CH)** - mottled olive brown/light brown/greenish gray - few fine sand and silt - stiff - moist - light brownish gray cemented sand at 23'	27	89	71	45						
25	8		14												
					BORING CONTINUED AT 27 FEET ON FIGURE B-4 (2 OF 2)										

NOTES
① Drilled 07/17/13 using a CME 75, 8" diameter hollow stem augers, and a 30" drop by 140 lb. automatic sampling hammer.
② See report text and figures in Appendices A and C for definitions, lab test results, and additional soil descriptions.
③ Groundwater seepage measured at 18' during drilling and 8' at end of drilling. Static equilibrium groundwater depth is unknown.
④ Surface elevation estimated from map of Shoreway Road by Freyer & Laureta, dated 9/10/13.

JACOBS ASSOCIATES
Engineers/Consultants

File No. 4520.0 | October 2013

Brown and Caldwell
South Bayside System Authority
Pump Station Predesign
San Carlos, California
Log of Boring B-4

Figure
B-4
(1 of 2)

LOG OF BORING B-4 (Continued)[1]

DEPTH feet	SAMPLE NO.	TYPE	PENETRATION RESISTANCE blows/ft.	GROUNDWATER	DESCRIPTION	MOISTURE %	DRY DENSITY lbs./ft.³	LIQUID LIMIT	PLASTICITY INDEX	GRAIN SIZE Gravel (>#4 sieve) %	GRAIN SIZE Sand (#4 to #200 sieve) %	GRAIN SIZE Fines (<#200 sieve) %	UNCONFINED COMPRESSIVE STRENGTH kips/ft.²	DIRECT SHEAR Cohesion p.s.f.	DIRECT SHEAR Internal Friction Angle
					BORING CONTINUED FROM 27 FEET ON FIGURE B-4 (1 OF 2)										
	9		11		**LEAN/FAT CLAY (CL/CH)** - bluish/greenish gray with reddish brown mottling - few fine sand and silt - stiff - moist	26	93								
30	10		9												
	11		22		**FAT CLAY (CH)** - dark bluish/greenish gray - trace fine sand and silt - very stiff - moist	34	88								
	12		18												
35					**BOTTOM OF BORING AT 35 FEET**										
40															
45															
50															

NOTES

① See notes on Figure B-4 (1 of 2).

JACOBS ASSOCIATES
Engineers/Consultants

File No. 4520.0 | October 2013

Brown and Caldwell
South Bayside System Authority
Pump Station Predesign
San Mateo County, California
Log of Boring B-4

Figure
B-4
(2 of 2)

LOG OF BORING B-5 ①

LOCATION: Proposed Belmont Gravity Sewer (see Figure 3).

GROUND SURFACE: Approx. El. 104' ④

DEPTH feet	SAMPLE NO.	TYPE	PENETRATION RESISTANCE blows/ft.	③ GROUNDWATER	DESCRIPTION ②	MOISTURE %	DRY DENSITY lbs./ft.³	LIQUID LIMIT	PLASTICITY INDEX	GRAIN SIZE: Gravel (>#4 sieve) %	GRAIN SIZE: Sand (#4 to #200 sieve) %	GRAIN SIZE: Fines (<#200 sieve) %	UNCONFINED COMPRESSIVE STRENGTH kips/ft.²	DIRECT SHEAR: Cohesion p.s.f.	DIRECT SHEAR: Internal Friction Angle
	1		14		**SANDY LEAN CLAY WITH GRAVEL (CL) - FILL** - grayish brown and light brown - fine to coarse sand, fine to coarse gravel - stiff - dry to moist	24									
5															
	2		4		**FAT CLAY (CH) - BAY MUD** - dark grayish blue - trace fine sand - soft - moist	90	47						0.68		
10															
	3		2		- strong sulfurous odor - very soft	87	50	122	90						
15															
	4		13		**LEAN/FAT CLAY WITH SAND (CL/CH)** - light olive brown with bluish gray mottling - fine to coarse sand - stiff - moist	21	103			0	27	73	FINES 39% Silt 34% Clay		
	5		10												
20															
	6		24		**LEAN/FAT CLAY (CL/CH)** - light olive brown with bluish gray and dark brown mottling - few fine sand - stiff - moist	25	99								
	7		14												
25															
					BORING CONTINUED AT 27 FEET ON FIGURE B-5 (2 OF 2)										

NOTES
① Drilled 07/16/13 using a CME 75, 8" diameter hollow stem augers, and a 30" drop by 140 lb. automatic sampling hammer.
② See report text and figures in Appendices A and C for definitions, lab test results, and additional soil descriptions.
③ Groundwater seepage measured at 27' during drilling and 7' at end of drilling. Static equilibrium groundwater depth is unknown.
④ Surface elevation estimated from map of Shoreway Road by Freyer & Laureta, dated 9/10/13.

JACOBS ASSOCIATES
Engineers/Consultants

File No. 4520.0 | October 2013

Brown and Caldwell
South Bayside System Authority
Pump Station Predesign
San Mateo County, California
Log of Boring B-5

Figure
B-5
(1 of 2)

LOG OF BORING B-5 (Continued)①

DEPTH feet	SAMPLE NO.	TYPE	PENETRATION RESISTANCE blows/ft.	GROUNDWATER	DESCRIPTION	MOISTURE %	DRY DENSITY lbs./ft.³	LIQUID LIMIT	PLASTICITY INDEX	GRAIN SIZE Gravel (>#4 sieve) %	GRAIN SIZE Sand (#4 to #200 sieve) %	GRAIN SIZE Fines (<#200 sieve) %	UNCONFINED COMPRESSIVE STRENGTH kips/ft.²	DIRECT SHEAR Cohesion p.s.f.	DIRECT SHEAR Internal Friction Angle
					BORING CONTINUED FROM 27 FEET ON FIGURE B-5 (1 OF 2)										
					SILTY SAND (SM)										
	8		12		- reddish brown - fine sand - wet	27	97						1.94		
	9		11		**LEAN/FAT CLAY (CL/CH)** - olive gray to light olive brown with dark brown/dark blue mottling - few sand to trace sand - stiff - moist/wet										
30															
	10		15		**SILTY SAND (SM)** - reddish/grayish brown - fine sand - loose/medium dense - wet	21				0	84	16			
	11		9												
35					**SILTY LEAN/FAT CLAY (CL/CH)** - olive brown - few fine sand, little silt - stiff - moist										
	12		19		**SANDY LEAN/FAT CLAY (CL/CH)** - brownish/bluish gray - fine sand, little to some silt - stiff - moist	20	105			1	46	53		96	37°
	13		16												
40															
	14		20		**FAT CLAY (CH)** - dark bluish gray and olive gray - few sand to trace sand, few silt - very stiff - moist	31	91						2.13		
	15		18												
45					**BOTTOM OF BORING AT 45 FEET**										
50															

CONSOLIDATION TEST
SAMPLE B5-8A
C_C = 0.29
P_C = 4.01 ksf

FINES
33% Silt
20% Clay

NOTES
① See notes on Figure B-5 (1 of 2).

JACOBS ASSOCIATES
Engineers/Consultants

File No. 4520.0 | October 2013

Brown and Caldwell
South Bayside System Authority
Pump Station Predesign
San Mateo County, California
Log of Boring B-5

Figure
B-5
(2 of 2)

LOG OF BORING B-6 ①

LOCATION: PS1 (see Figure 4).

GROUND SURFACE: Approx. El. 107' ④

DEPTH feet	SAMPLE NO.	TYPE	PENETRATION RESISTANCE blows/ft.	③ GROUNDWATER	DESCRIPTION ②	MOISTURE %	DRY DENSITY lbs./ft.³	LIQUID LIMIT	PLASTICITY INDEX	GRAIN SIZE Gravel (>#4 sieve) %	GRAIN SIZE Sand (#4 to #200 sieve) %	GRAIN SIZE Fines (<#200 sieve) %	UNCONFINED COMPRESSIVE STRENGTH kips/ft.²	DIRECT SHEAR Cohesion p.s.f.	DIRECT SHEAR Internal Friction Angle
					Pump Station Lot: 3 inches asphalt concrete 5 inches aggregate base										
	1		27		**CLAYEY SAND WITH GRAVEL (SC) - FILL** - dark brown with orange mottling - fine to coarse angular gravel, few to little sand - few organics - medium dense - moist	20	98			31	36	33			
5															
	2		10		**FAT CLAY (CH)** - dark olive brown with dark bluish gray mottling - few coarse sand - trace organics - medium stiff - moist	30	90								
10															
	3		14		**CLAYEY SAND (SC)** - light olive brown - fine sand, little to some silt - loose - wet	24	102						0.53		
	4		5			24		25	10	2	58	40			
15															
	5		15		**SANDY LEAN/FAT CLAY (CL/CH)** - orangish brown - fine sand, little to some silt - stiff - moist	27	92							321	25°
	6		17												
20															
	7		6		**WELL-GRADED SAND WITH SILT (SW-SM)** - dark gray, varicolored - fine to coarse sand, trace fine gravel - loose/medium dense –> could be slough blow counts - wet	21				1	89	10			
	8		51		**SANDY FAT CLAY (CH)** - light brown with light gray mottling - fine sand, little to some silt - hard - moist										
25															

Borehole sloughing below 20'

CORROSION TEST
Sample B6-2
See Figure C-6

FINES
23% Silt
17% Clay

BORING CONTINUED AT 27 FEET ON FIGURE B-6 (2 OF 2)

NOTES
① Drilled 07/16/13 using a CME 75, 8" diameter hollow stem augers, and a 30" drop by 140 lb. automatic sampling hammer.
② See report text and figures in Appendices A and C for definitions, lab test results, and additional soil descriptions.
③ Groundwater seepage measured at 15' during drilling and 5' at end of drilling. Static equilibrium groundwater depth is unknown.
④ Surface elevation estimated from topographic map of PS1 (Menlo Park P.S.) provided by Brown and Caldwell (email dated 10/21/2013).

JACOBS ASSOCIATES
Engineers/Consultants

File No. 4520.0 | October 2013

Brown and Caldwell
South Bayside System Authority
Pump Station Predesign
San Mateo County, California
Log of Boring B-6

Figure
B-6
(1 of 2)

LOG OF BORING B-6 (Continued)①

DEPTH feet	SAMPLE NO.	TYPE	PENETRATION RESISTANCE blows/ft.	GROUNDWATER	DESCRIPTION	MOISTURE %	DRY DENSITY lbs./ft.³	LIQUID LIMIT	PLASTICITY INDEX	GRAIN SIZE Gravel (>#4 sieve) %	GRAIN SIZE Sand (#4 to #200 sieve) %	GRAIN SIZE Fines (<#200 sieve) %	UNCONFINED COMPRESSIVE STRENGTH kips/ft.²	DIRECT SHEAR Cohesion p.s.f.	DIRECT SHEAR Internal Friction Angle
					BORING CONTINUED FROM 27 FEET ON FIGURE B-6 (1 OF 2)										
	NSR		-		**FAT CLAY (CH)** - light olive brown with bluish gray mottling - few sand and silt - stiff - moist										
	10		12												
30															
	11		11		- few fine sand, little silt	24	102	54	32						
	12		17												
35															
					SANDY FAT CLAY (CH) - olive brown - fine sand, little to some silt - medium stiff to stiff - moist - grades to CH with depth										
	13		9			31	90							645	22°
	14		11					54	32						
40															
					FAT CLAY (CH) - bluish gray to bluish/greenish gray - few fine sand, few to little silt - stiff - moist										
	15		14			24	99						1.11		
	16		10												
45															
					SANDY FAT CLAY (CH) - bluish/greenish gray with light gray mottling - fine to coarse sand, few fine gravel, little silt - very stiff - moist/dry										
	17		30			22	97								
	18		15												
50															
					BOTTOM OF BORING AT 50 FEET										

CONSOLIDATION TEST
SAMPLE B6-11A
C_C = 0.24
P_C = 3.90 ksf

NOTES
① See notes on Figure B-6 (1 of 2).

JACOBS ASSOCIATES
Engineers/Consultants

File No. 4520.0 | October 2013

Brown and Caldwell
South Bayside System Authority
Pump Station Predesign
San Mateo County, California
Log of Boring B-6

Figure
B-6
(2 of 2)

Appendix C

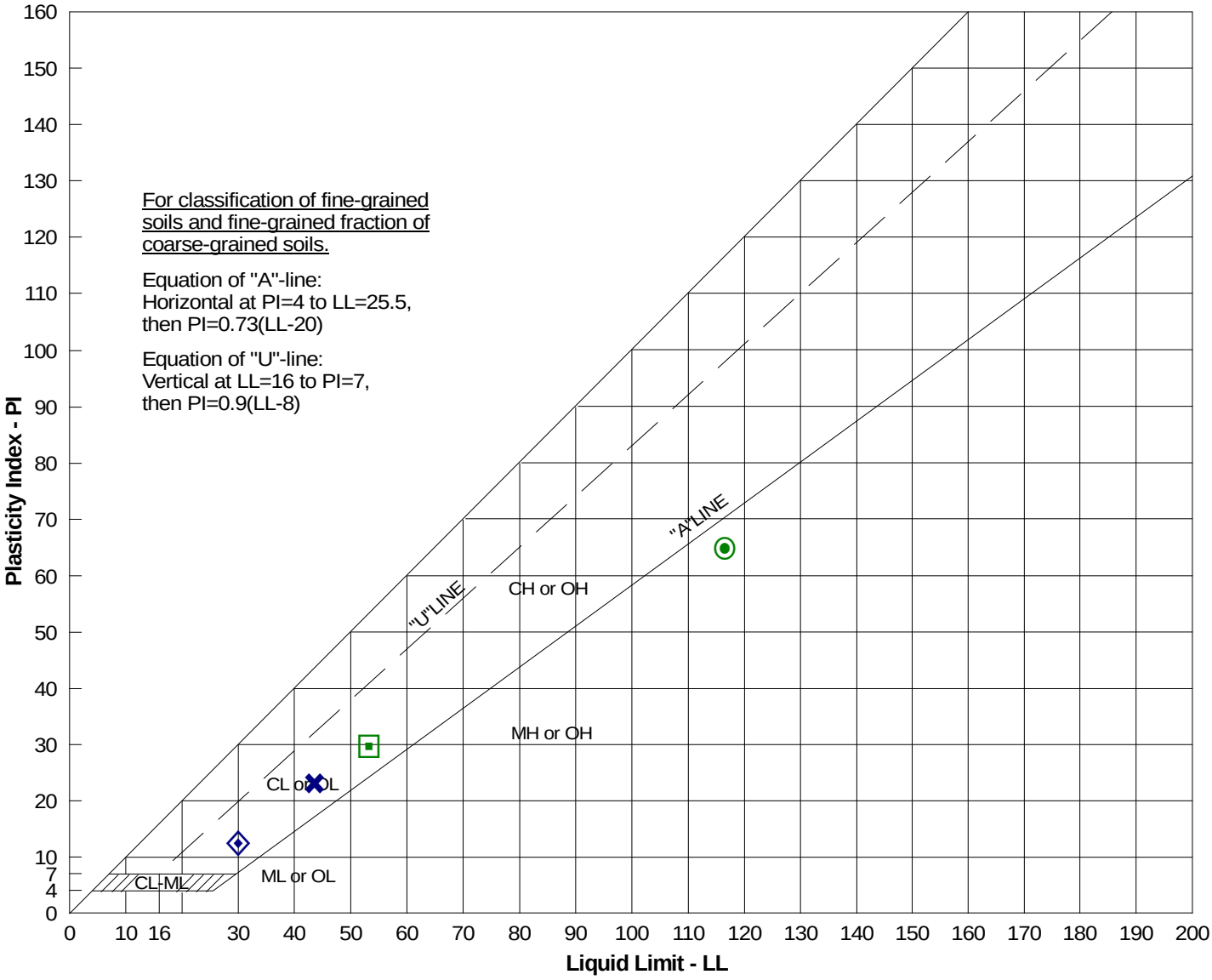

SITE LOCATION	TEST SYMBOL	BORING SAMPLE NO.	DEPTH (ft)	LIQUID LIMIT (Wet Prep)	LIQUID LIMIT (Oven Dried)	RATIO*	PLASTICITY INDEX - PI	GROUP SYMBOL**
PS3 (San Carlos PS)	◉	B-1-4	9-10	116	77	0.66	65	OH
	◈	B-1-8	19½-20	30	-	-	13	CL
	▣	B-1-12	28½-30	53	-	-	30	CH
	✖	B-1-16	38½-40	43	-	-	22	CL

* OH or OL Determination = $\frac{\text{Liquid Limit Test performed on oven-dried sample}}{\text{Liquid Limit Test performed on wet prepared sample}}$ = Ratio less than 75%

** Classification of fines < 0.425mm

JACOBS ASSOCIATES
Engineers/Consultants

File No. 4520.0 | October 2013

Brown and Caldwell
South Bayside System Authority
Pump Station Predesign
San Mateo County, California

Plasticity Index

Figure
C-1
(1 of 3)

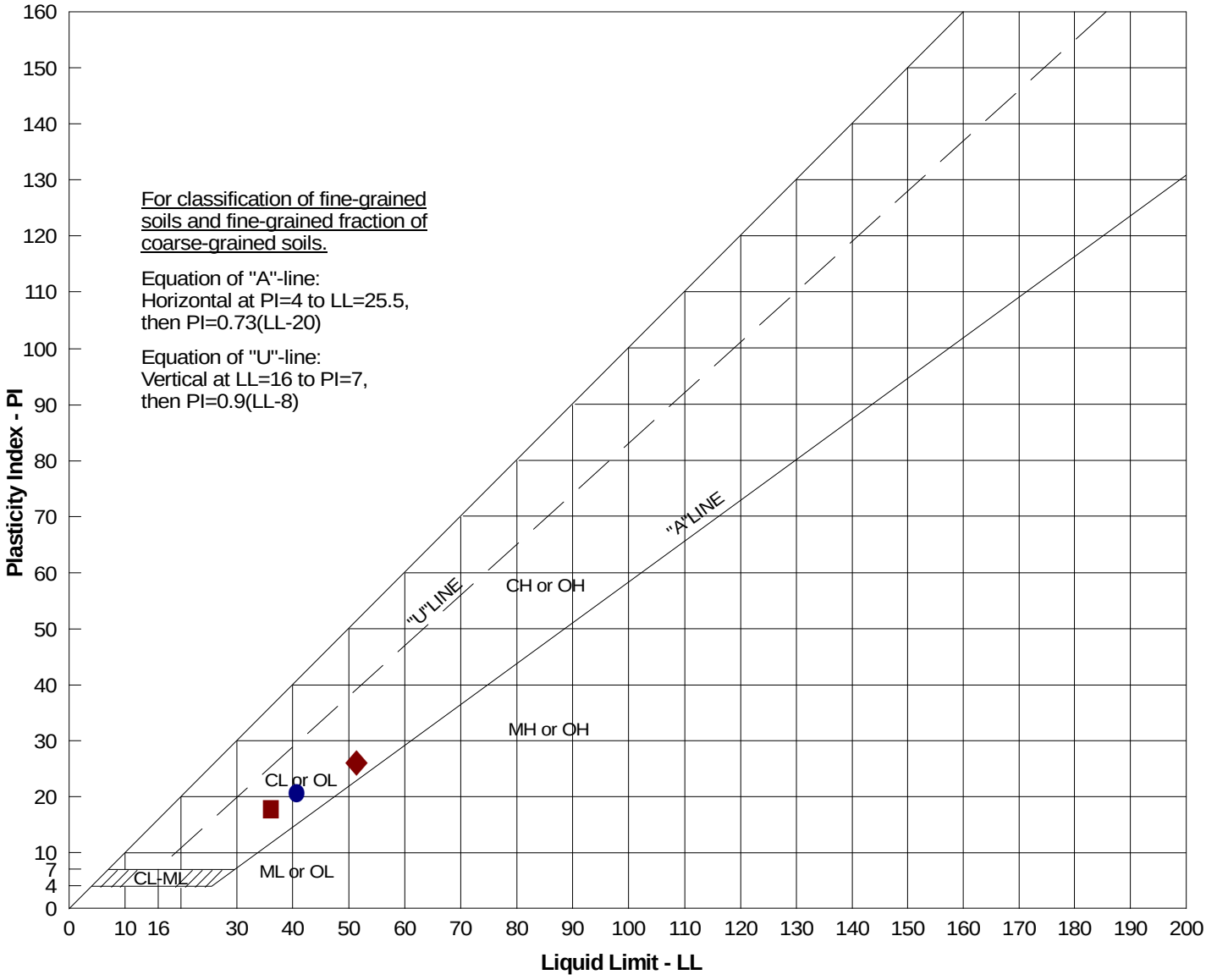

SITE LOCATION	TEST SYMBOL	SAMPLE NO.	DEPTH (ft)	LIQUID LIMIT - LL	PLASTICITY INDEX - PI	GROUP SYMBOL*
PS2 (Redwood City PS)	●	B-2-4	13½-15	41	21	CL
	◆	B-2-8	23½-24	51	27	CH
	■	B-2-14	38½-40	36	18	CL

* Classification of fines < 0.425mm

JACOBS ASSOCIATES
Engineers/Consultants

File No. 4520.0 | October 2013

Brown & Caldwell
South Bayside System Authority
Pump Station Predesign
San Mateo County, California

Plasticity Index

Figure
C-1
(2 of 3)

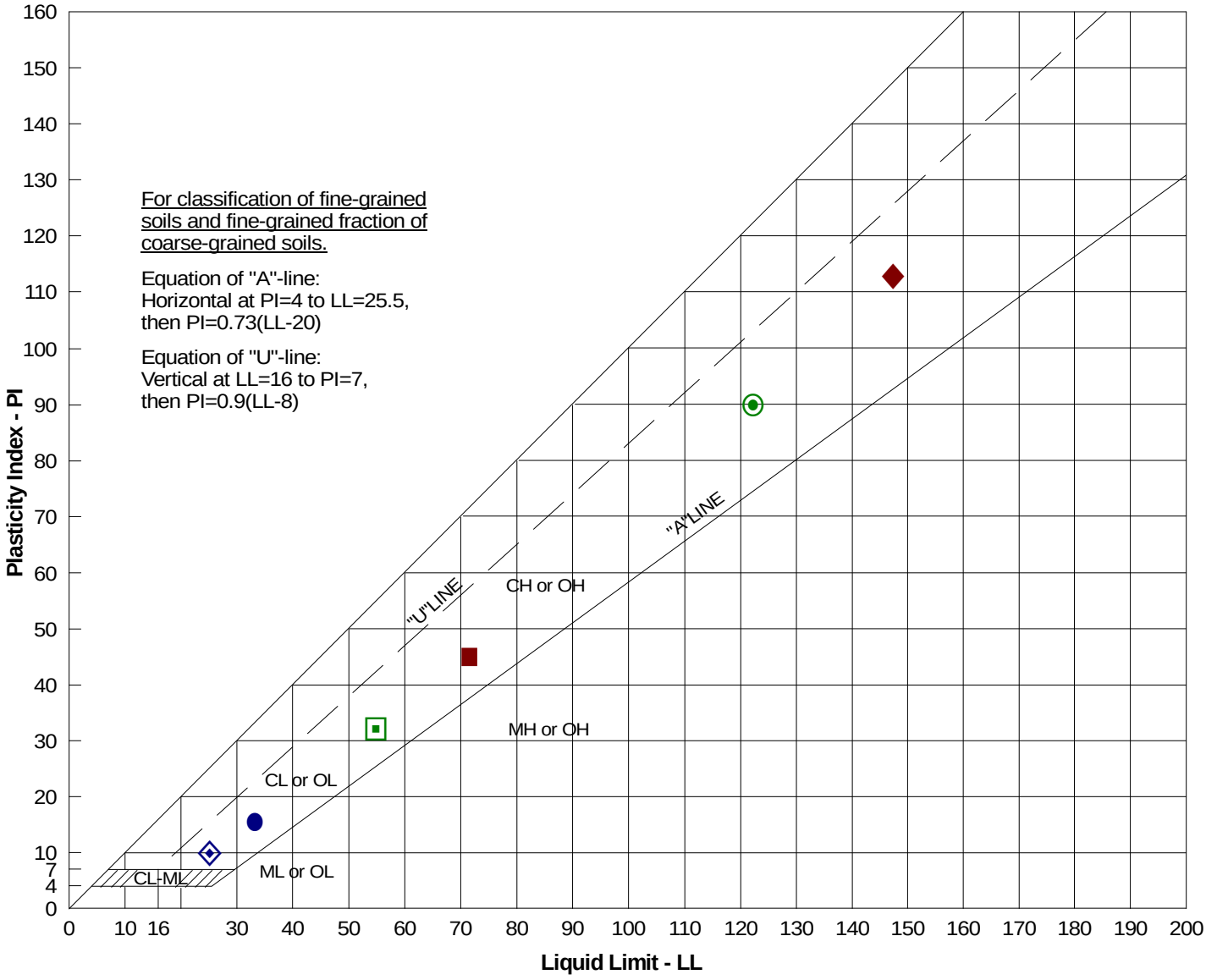

SITE LOCATION	TEST SYMBOL	SAMPLE NO.	DEPTH (ft)	LIQUID LIMIT - LL	PLASTICITY INDEX - PI	GROUP SYMBOL*
Belmont Gravity Sewer	●	B3-7B	22½-23	33	16	CL
	◆	B4-2B	7½-8	148	113	CH
	■	B4-8	23½-25	71	45	CH
	◉	B5-3A	13-13½	122	90	CH
PS1 (Menlo Park PS)	◈	B6-4	13½-15	25	10	CL
	▣	B6-11A	33-33½	54	32	CH

* Classification of fines < 0.425mm

JACOBS ASSOCIATES
Engineers/Consultants

File No. 4520.0 | October 2013

Brown and Caldwell
South Bayside System Authority
Pump Station Predesign
San Mateo County, California

Plasticity Index

Figure
C-1
(3 of 3)

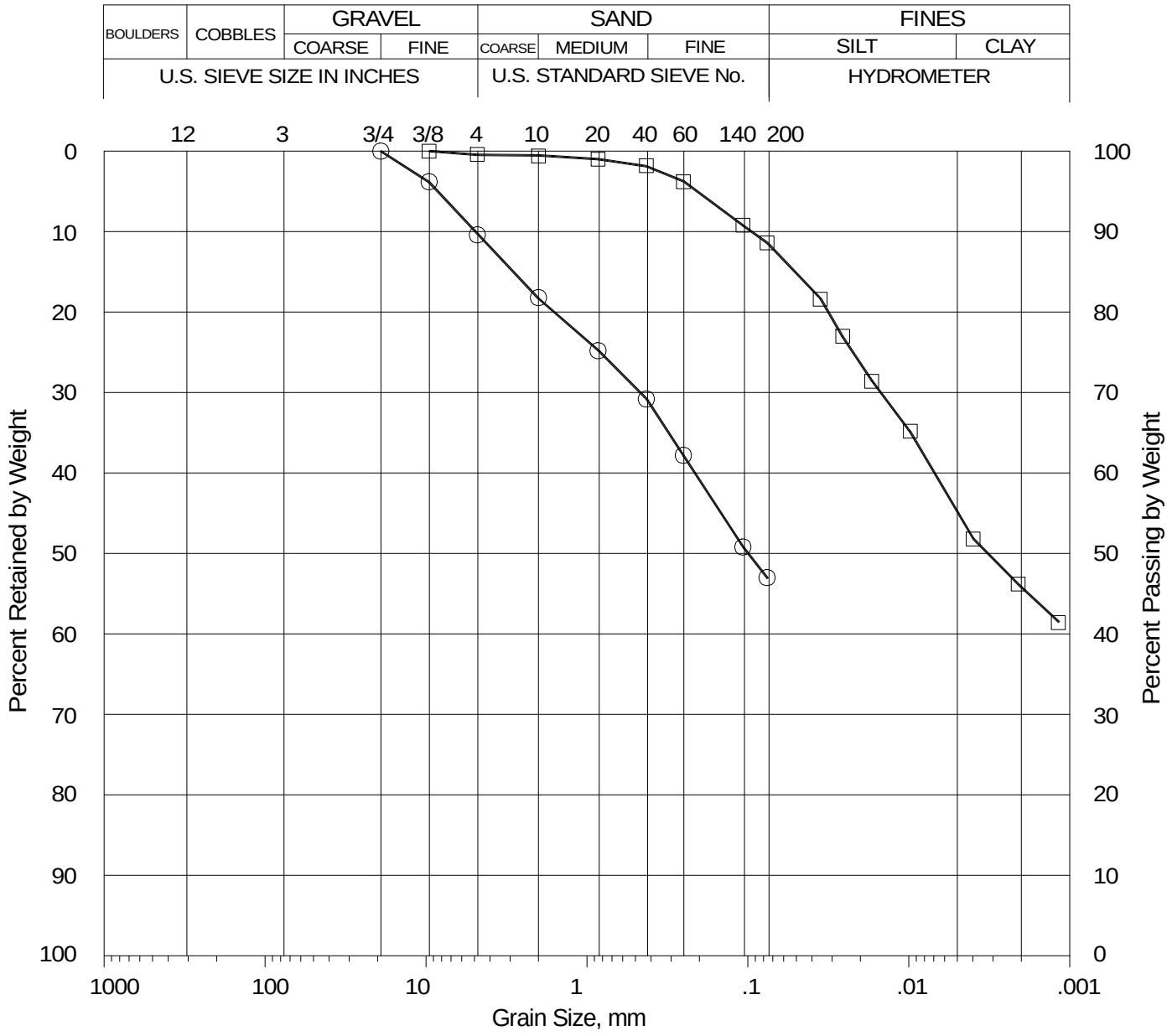

SITE LOCATION	TEST SYMBOL	SAMPLE NO.	DEPTH (ft)	GROUP SYMBOL	USCS DESCRIPTION (based on grain size)
PS 3 (San Carlos PS)	○	B-1-1&2	2½-5	CL	sandy lean clay
	□	B-1-11	27½-28	CH	fat clay

NOTE: The largest particle (grain) size that could have been sampled from our borings by our sample barrels is a function of the inside diameter of the sample barrels used (see Figure A-1). Therefore, there may be larger particles (e.g., coarse gravel, cobbles or boulders) in the soils sampled than reflected on the boring logs and grain size distribution curves provided in this report.

JACOBS ASSOCIATES
Engineers/Consultants

File No. 4520.0 | October 2013

Brown & Caldwell
South Bayside System Authority
Pump Station Predesign
San Mateo, California
Grain Size

Figure
C-2
(1 of 6)

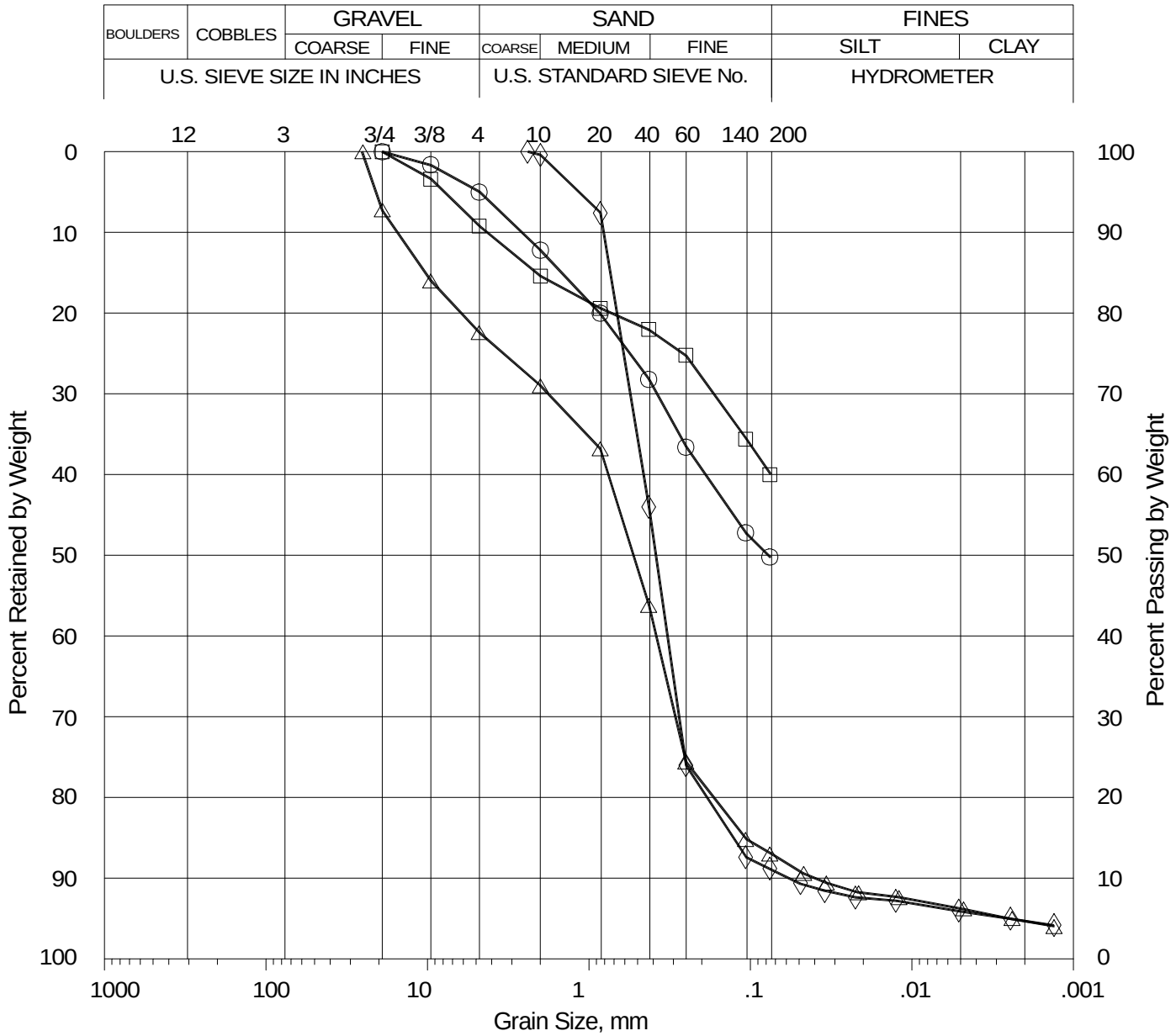

SITE LOCATION	TEST SYMBOL	SAMPLE NO.	DEPTH (ft)	GROUP SYMBOL	USCS DESCRIPTION (based on grain size)
PS2 (Redwood City PS)	○	B-2-1	2-3½	CL	sandy lean clay
	□	B-2-4	13½-15	CL	sandy lean clay
	△	B-2-5&6	18-20	SM	silty sand with gravel
	◊	B-2-7	22-23½	SW-SM	well-graded sand with silt

NOTE: The largest particle (grain) size that could have been sampled from our borings by our sample barrels is a function of the inside diameter of the sample barrels used (see Figure A-1). Therefore, there may be larger particles (e.g., coarse gravel, cobbles or boulders) in the soils sampled than reflected on the boring logs and grain size distribution curves provided in this report.

JACOBS ASSOCIATES
Engineers/Consultants

File No. 4520.0 | October 2013

Brown & Caldwell
South Bayside System Authority
Pump Station Predesign
San Mateo County, California
Grain Size

Figure
C-2
(2 of 6)

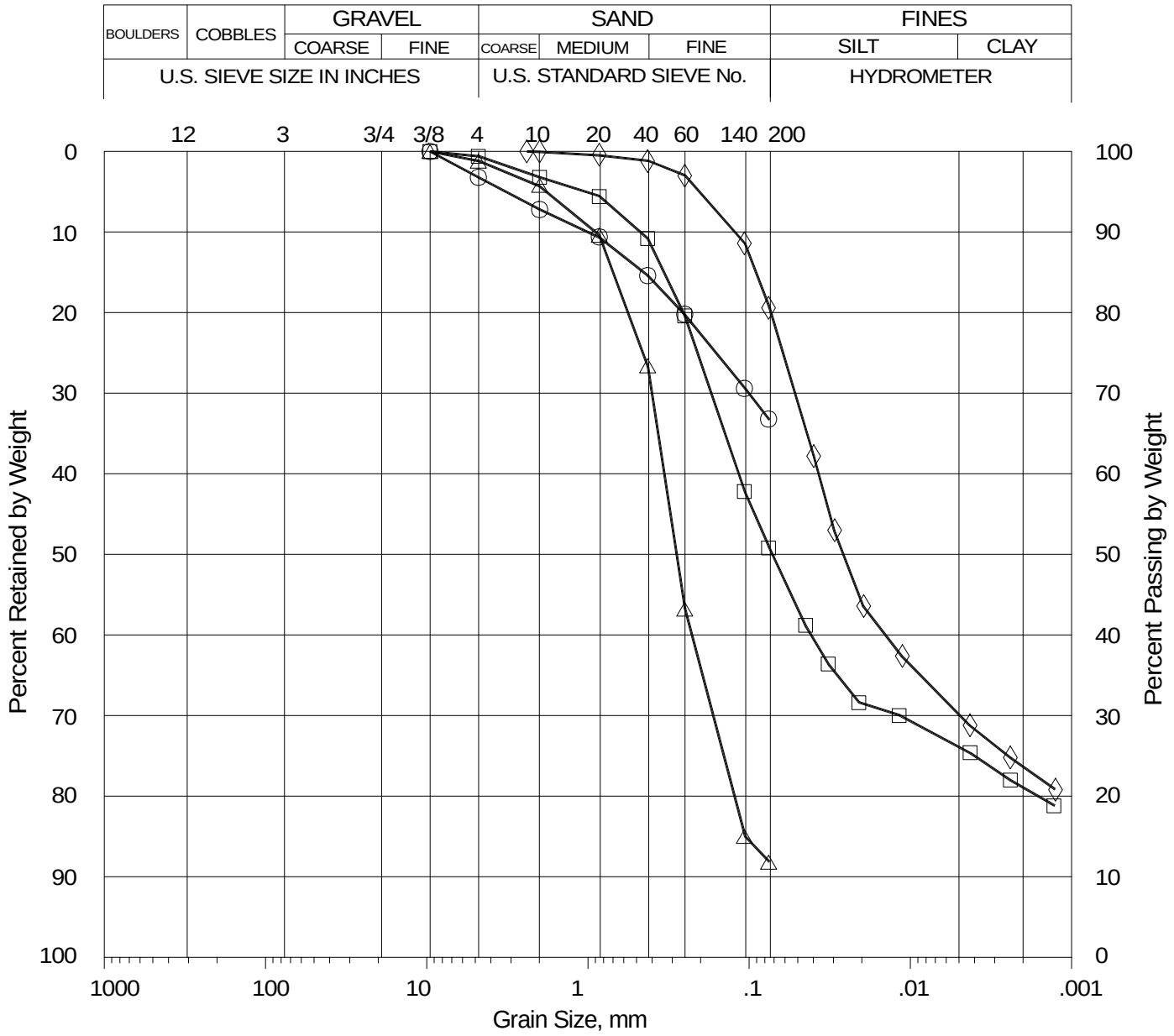

SITE LOCATION	TEST SYMBOL	SAMPLE NO.	DEPTH (ft)	GROUP SYMBOL	USCS DESCRIPTION (based on grain size)
PS2 (Redwood City PS)	○	B-2-8	23½-24	CH	sandy fat clay
	□	B-2-9	28-28½	CL	sandy lean clay
	△	B-2-11	32-33½	SW-SM	well-graded sand with silt
	◊	B-2-12	34-35	CH	fat clay with sand

NOTE: The largest particle (grain) size that could have been sampled from our borings by our sample barrels is a function of the inside diameter of the sample barrels used (see Figure A-1). Therefore, there may be larger particles (e.g., coarse gravel, cobbles or boulders) in the soils sampled than reflected on the boring logs and grain size distribution curves provided in this report.

JACOBS ASSOCIATES
Engineers/Consultants

File No. 4520.0 | October 2013

Brown & Caldwell
South Bayside System Authority
Pump Station Predesign
San Mateo County, California
Grain Size

Figure
C-2
(3 of 6)

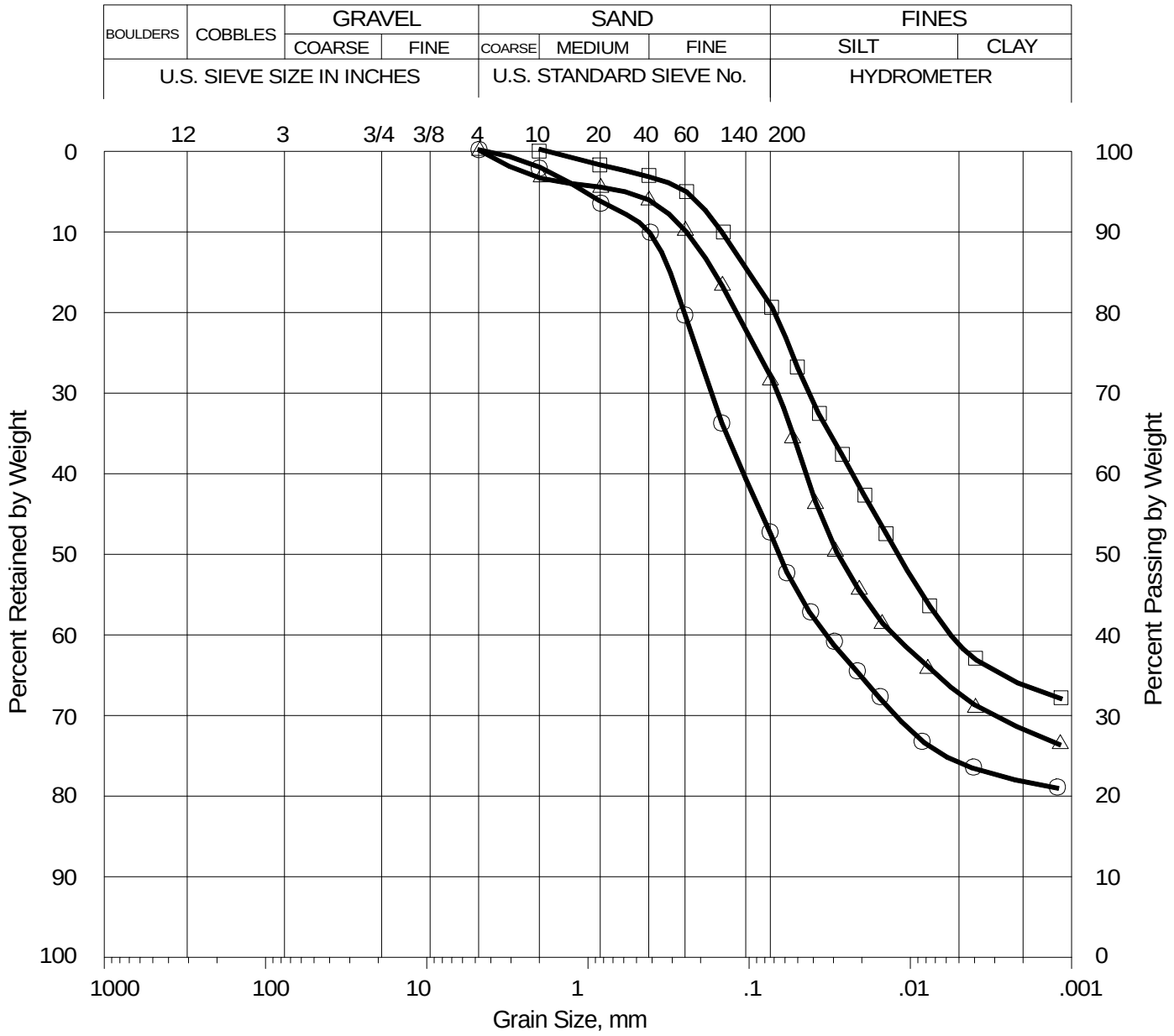

SITE LOCATION	TEST SYMBOL	SAMPLE NO.	DEPTH (ft)	GROUP SYMBOL	USCS DESCRIPTION (based on grain size)
Belmont Gravity Sewer	□	B3-3A & 4A	13-15	CH	fat clay with sand
	○	B3-5A	18-18½	CL	sandy lean clay
	△	B4-4	13½-15	CL-CH	lean to fat clay with sand

NOTE: The largest particle (grain) size that could have been sampled from our borings by our sample barrels is a function of the inside diameter of the sample barrels used (see Figure A-1). Therefore, there may be larger particles (e.g., coarse gravel, cobbles or boulders) in the soils sampled than reflected on the boring logs and grain size distribution curves provided in this report.

JACOBS ASSOCIATES
Engineers/Consultants

File No. 4520.0 | October 2013

Brown and Caldwell
South Bayside System Authority
Pump Station Predesign
San Mateo County, California
Grain Size

Figure
C-2
(4 of 6)

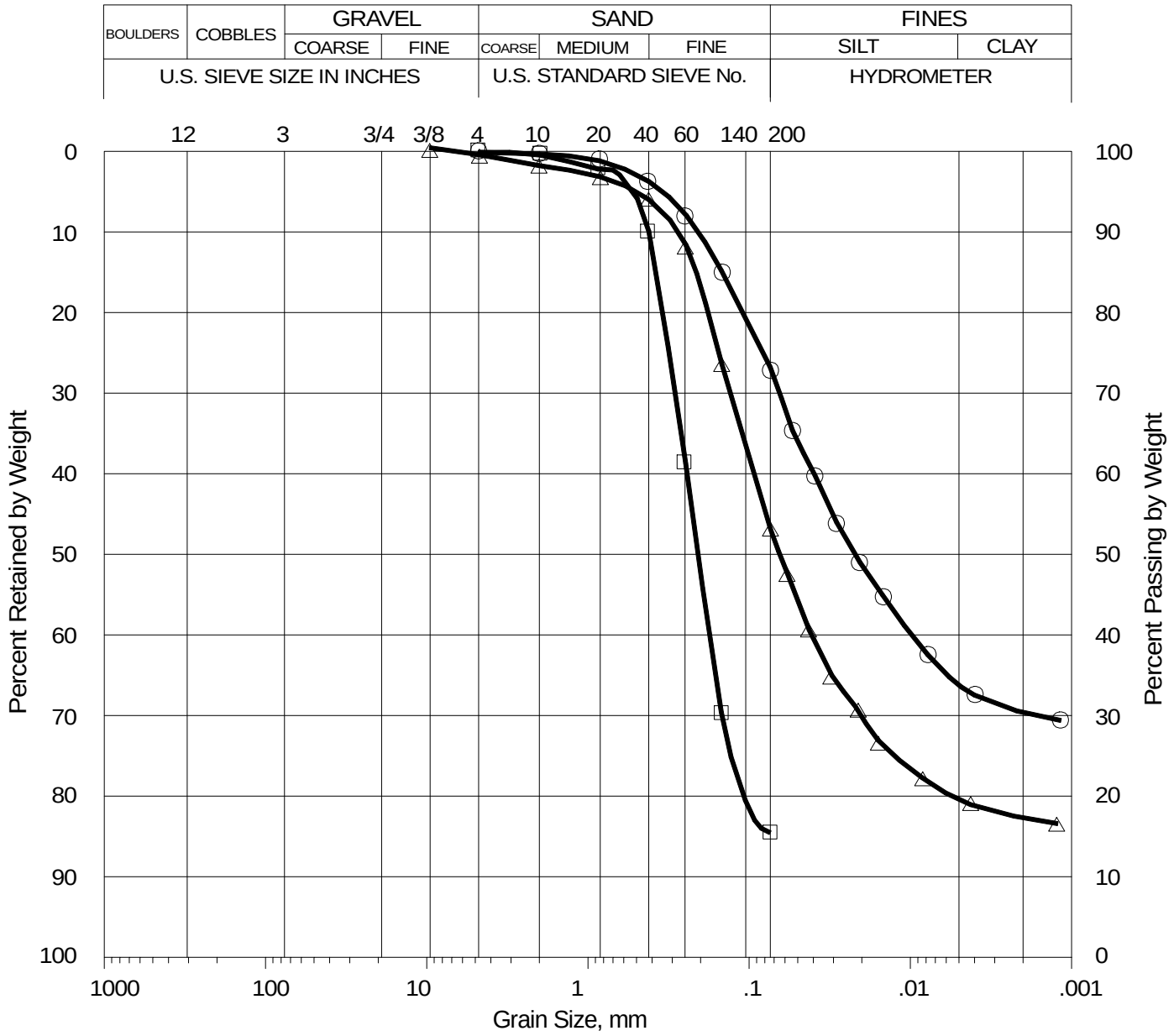

SITE LOCATION	TEST SYMBOL	SAMPLE NO.	DEPTH (ft)	GROUP SYMBOL	USCS DESCRIPTION (based on grain size)
Belmont Gravity Sewer	○	B5-4A	18-18½	CL/CH	lean/fat clay with sand
	□	B5-10B	32½-33½	SM	silty sand
	△	B5-12A & 12B	37½-38½	CL/CH	sandy lean/fat clay

NOTE: The largest particle (grain) size that could have been sampled from our borings by our sample barrels is a function of the inside diameter of the sample barrels used (see Figure A-1). Therefore, there may be larger particles (e.g., coarse gravel, cobbles or boulders) in the soils sampled than reflected on the boring logs and grain size distribution curves provided in this report.

JACOBS ASSOCIATES
Engineers/Consultants

File No. 4520.0 | October 2013

Brown and Caldwell
South Bayside System Authority
Pump Station Predesign
San Mateo County, California
Grain Size

Figure
C-2
(5 of 6)

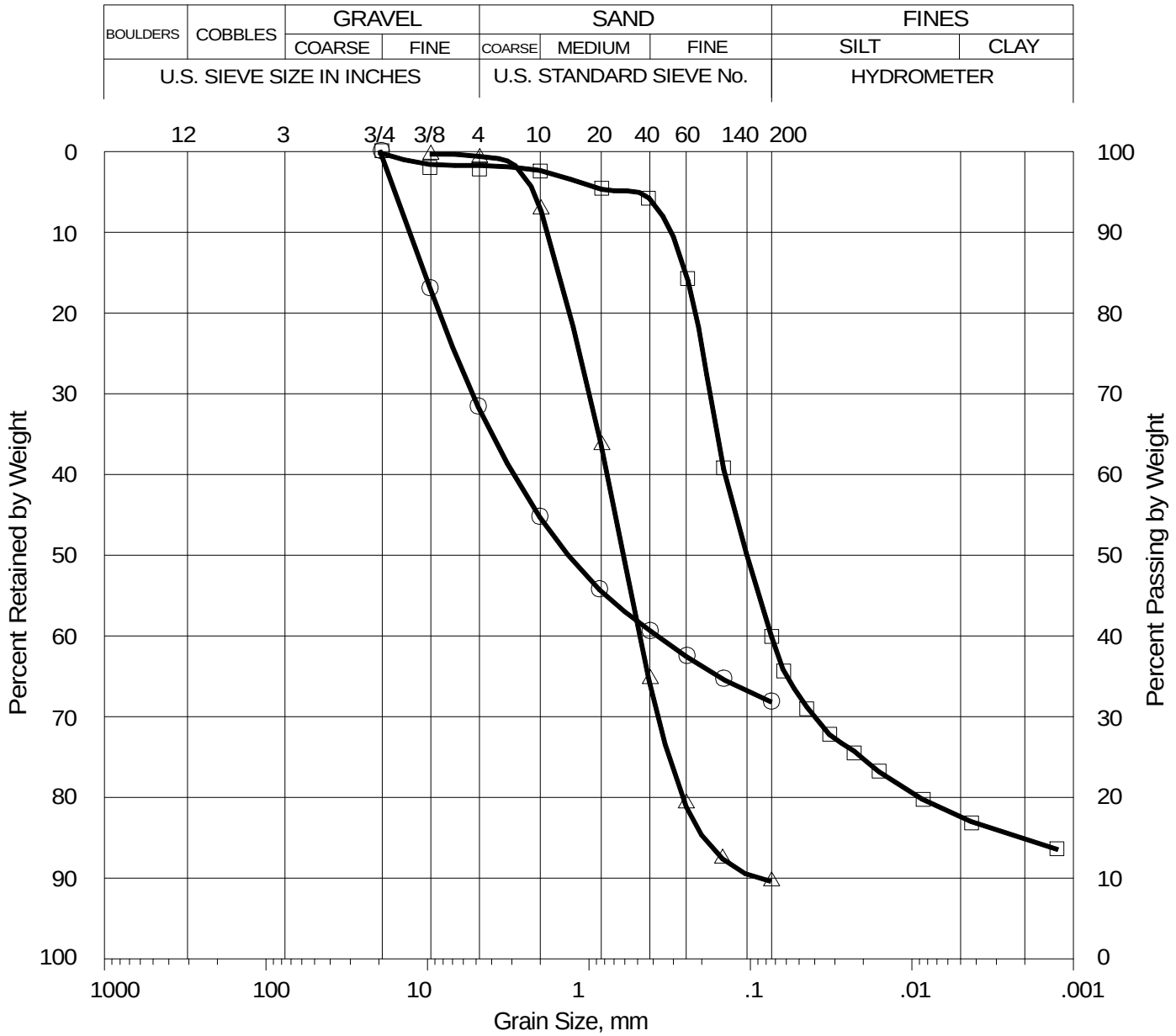

SITE LOCATION	TEST SYMBOL	SAMPLE NO.	DEPTH (ft)	GROUP SYMBOL	USCS DESCRIPTION (based on grain size)
PS1 (Menlo Park PS)	○	B6-1A	3-3½	SC	clayey sand
	□	B6-4	13½-15	SC	clayey sand
	△	B6-7	22-23½	SW-SM	well-graded sand with silt

NOTE: The largest particle (grain) size that could have been sampled from our borings by our sample barrels is a function of the inside diameter of the sample barrels used (see Figure A-1). Therefore, there may be larger particles (e.g., coarse gravel, cobbles or boulders) in the soils sampled than reflected on the boring logs and grain size distribution curves provided in this report.

JACOBS ASSOCIATES
Engineers/Consultants

File No. 4520.0 | October 2013

Brown and Caldwell
South Bayside System Authority
Pump Station Predesign
San Mateo County, California
Grain Size

Figure
C-2
(6 of 6)

UNCONFINED COMPRESSION TEST

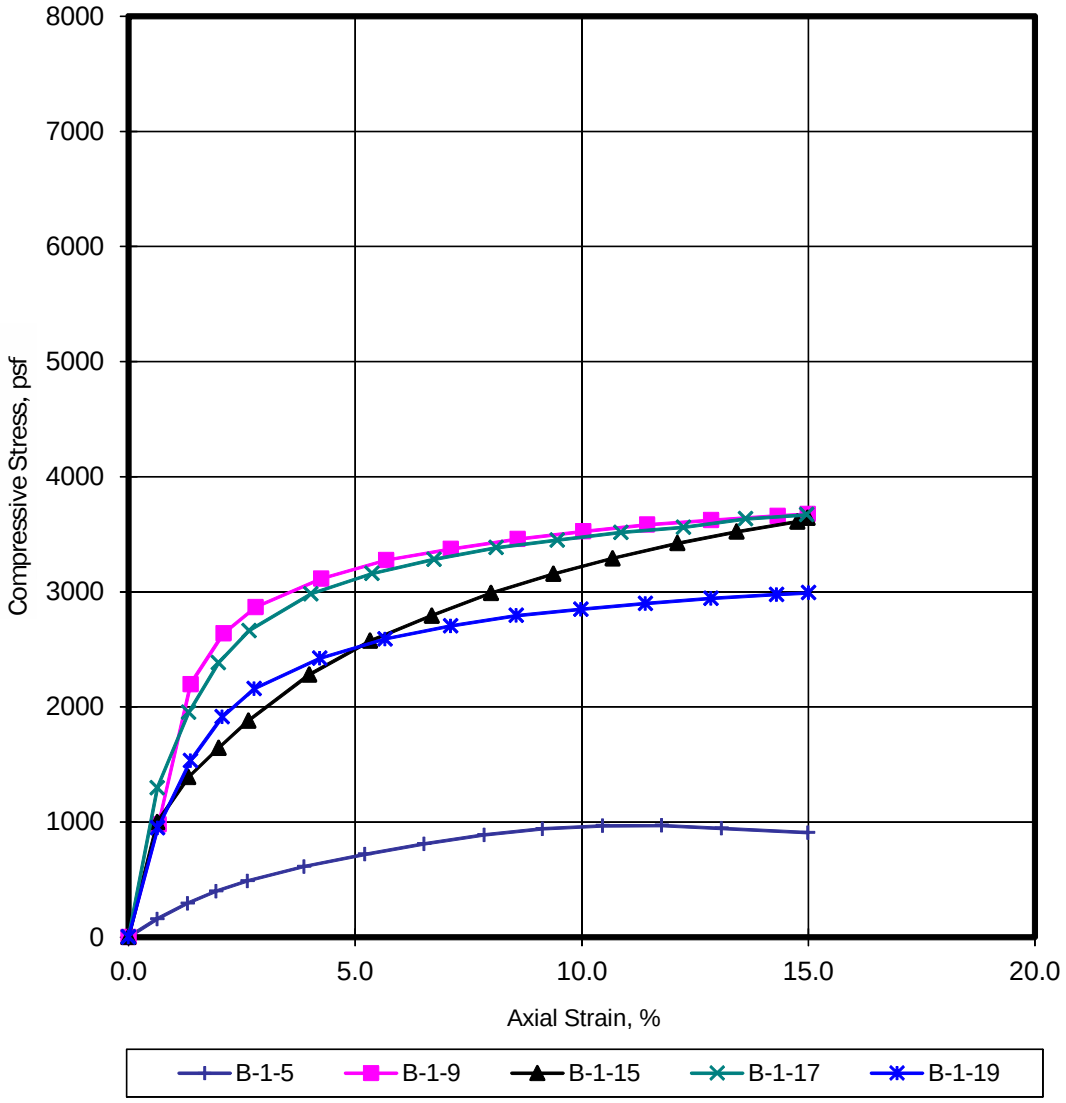

PS3 (San Carlos PS)	BORING SAMPLE NO.	B-1-5	B-1-9	B-1-15	B-1-17	B-1-19
	MAXIMUM UNCONFINED STRESS, psf	971	3675	3643	3670	2991
	%STRAIN @ PEAK STRESS	11.8	15.0	15.0	15.0	15.0
	DEPTH, ft.	12½-13	22½-23	38-38½	43-43½	48-48½
	WATER CONTENT, %	89	28	19	24	32
	DRY DENSITY, pcf	50	97	115	105	94
	SATURATION, %	100	100	100	100	100

Maximum Unconfined Stress cut-off = 15% strain
Average Strain Rate = 0.07 in/min.

JACOBS ASSOCIATES
Engineers/Consultants

File No. 4520.0 | October 2013

Brown & Caldwell
South Bayside System Authority
Pump Station Predesign
San Mateo County, California

Unconfined Compression

Figure
C-3
(1 of 5)

UNCONFINED COMPRESSION TEST

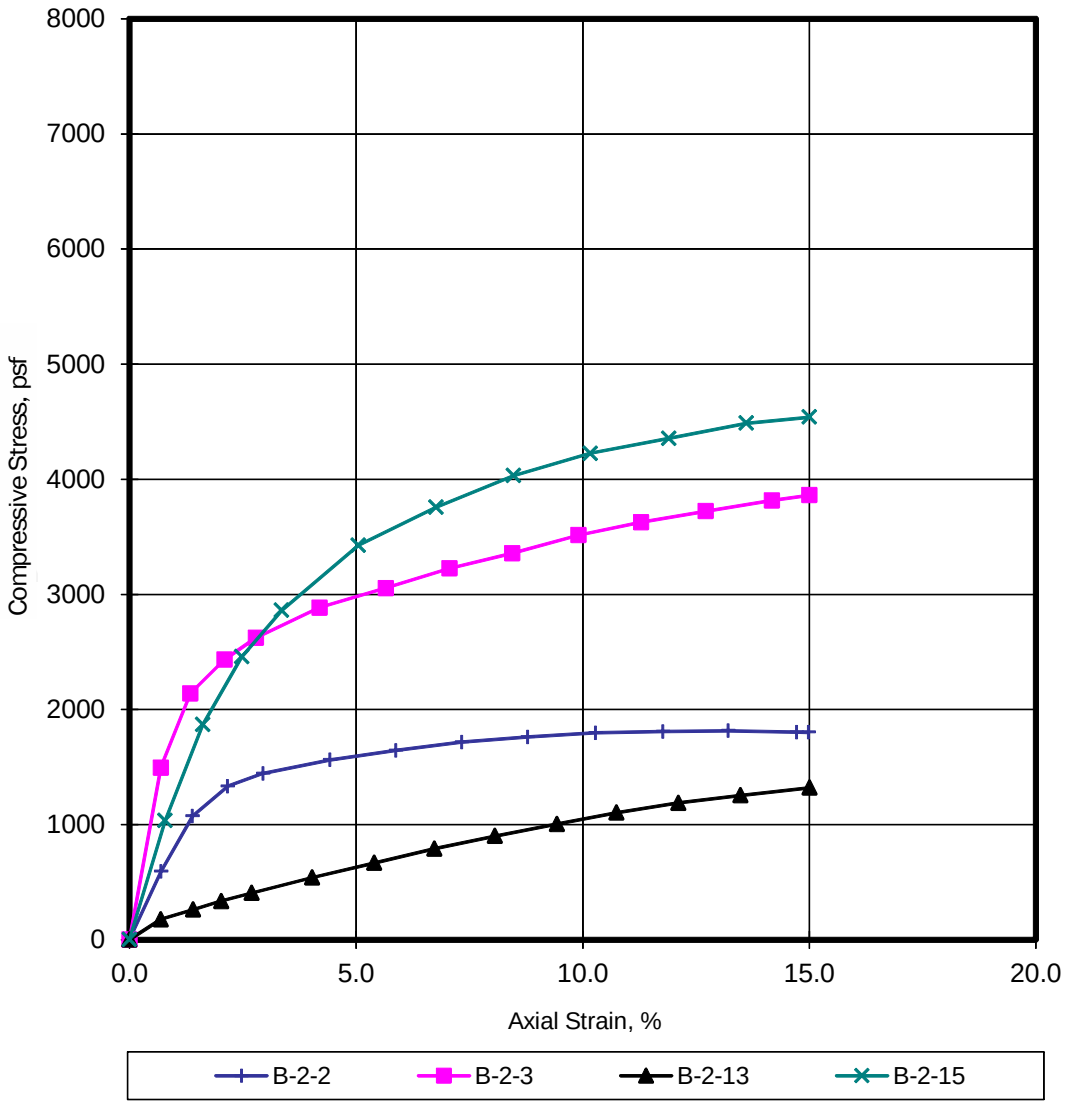

PS2 (Redwood City PS)	BORING SAMPLE NO.	B-2-2	B-2-3	B-2-13	B-2-15
	MAXIMUM UNCONFINED STRESS, psf	1815	3861	1320	4540
	%STRAIN @ PEAK STRESS	13.2	15.0	15.0	15.0
	DEPTH, ft.	9½-10	13-13½	38-38½	43-43½
	WATER CONTENT, %	38	27	31	20
	DRY DENSITY, pcf	85	100	94	113
	SATURATION, %	100	100	100	100

Maximum Unconfined Stress cut-off = 15% strain
Average Strain Rate = 0.07 in/min.

JACOBS ASSOCIATES
Engineers/Consultants

File No. 4520.0 | October 2013

Brown & Caldwell
South Bayside System Authority
Pump Station Predesign
San Mateo County, California

Unconfined Compression

Figure
C-3
(2 of 5)

UNCONFINED COMPRESSION TEST

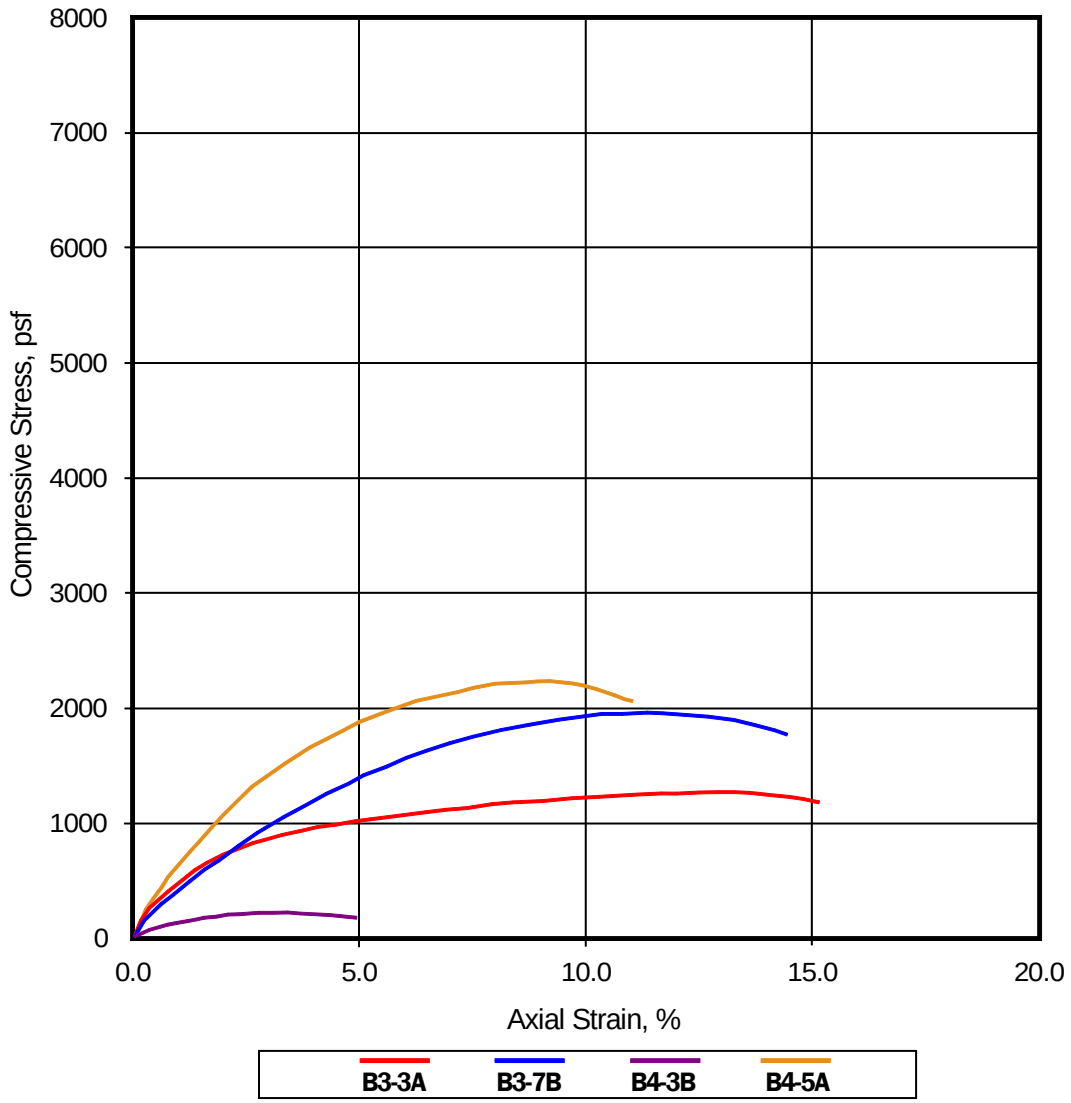

Belmont Gravity Sewer	BORING SAMPLE NO.	B3-3A	B3-7B	B4-3B	B4-5A
	MAXIMUM UNCONFINED STRESS, psf	1288	1972	213	2206
	%STRAIN @ PEAK STRESS	13.5	11.3	3.3	8.8
	DEPTH, ft.	13-13½	22½-23	12½-13	17½-18
	WATER CONTENT, %	28	22	22	17
	DRY DENSITY, pcf	95	103	107	116
	SATURATION, %	100	96	102	99

Maximum Unconfined Stress cut-off = 15% strain
Average Strain Rate = 0.08 in/min.

JACOBS ASSOCIATES
Engineers/Consultants

File No. 4520.0 | October 2013

Brown and Caldwell
South Bayside System Authority
Pump Station Predesign
San Mateo County, California

Unconfined Compression

Figure
C-3
(3 of 5)

UNCONFINED COMPRESSION TEST

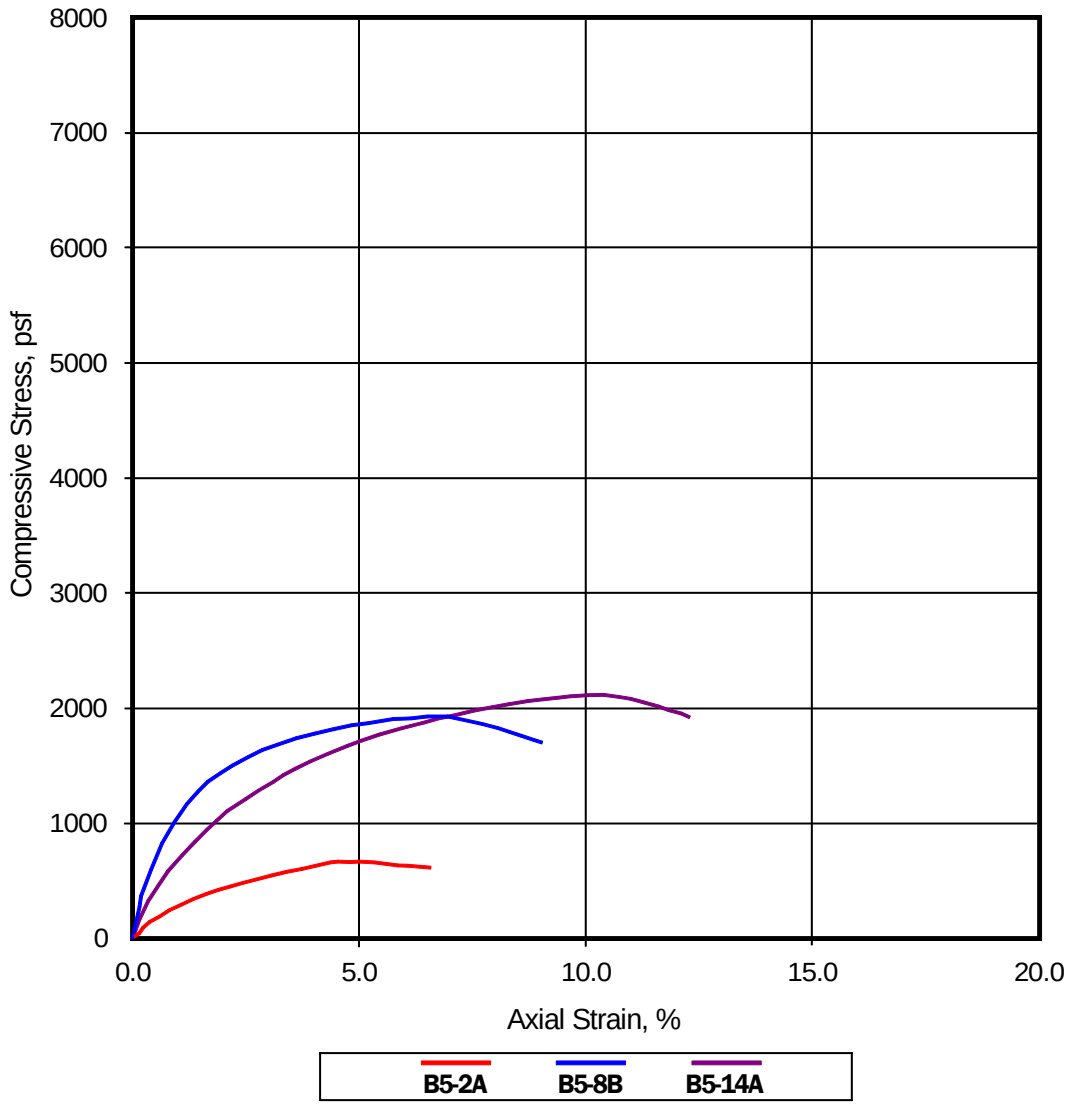

Belmont Gravity Sewer	BORING SAMPLE NO.	B5-2A	B5-8B	B5-14A
	MAXIMUM UNCONFINED STRESS, psf	678	1936	2127
	%STRAIN @ PEAK STRESS	4.5	6.7	10.2
	DEPTH, ft.	8-8½	27½-28	43-43½
	WATER CONTENT, %	90	31	31
	DRY DENSITY, pcf	47	92	91
	SATURATION, %	93	100	100

Maximum Unconfined Stress cut-off = 15% strain
Average Strain Rate = 0.08 in/min.

JACOBS ASSOCIATES
Engineers/Consultants

File No. 4520.0 | October 2013

Brown and Caldwell
South Bayside System Authority
Pump Station Predesign
San Mateo County, California
Unconfined Compression

Figure
C-3
(4 of 5)

UNCONFINED COMPRESSION TEST

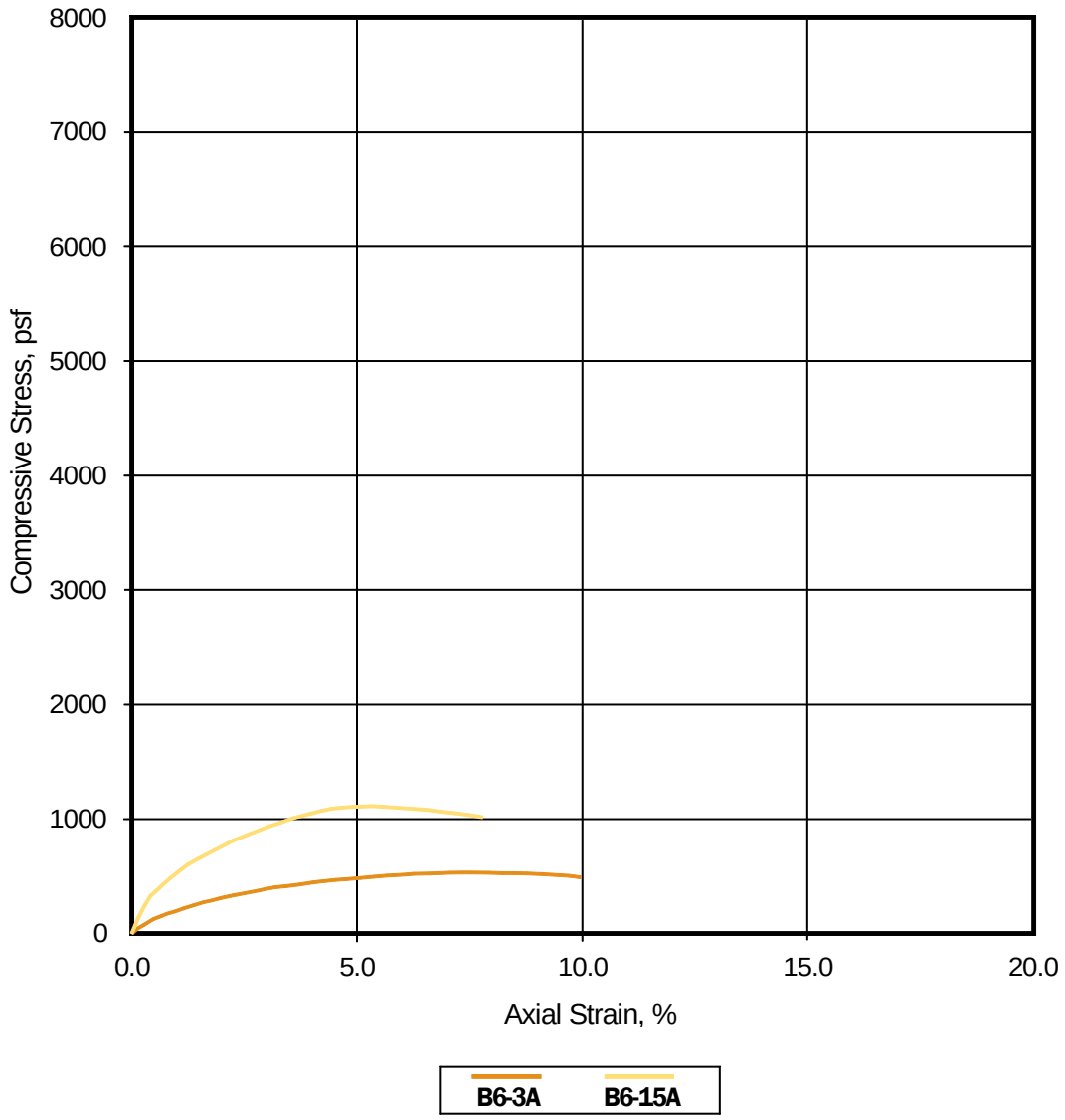

PS1 (Menlo Park PS)	BORING SAMPLE NO.	B6-3A	B6-15A
	MAXIMUM UNCONFINED STRESS, psf	527	1112
	%STRAIN @ PEAK STRESS	7.4	5.3
	DEPTH, ft.	13-13½	43-43½
	WATER CONTENT, %	24	23.5
	DRY DENSITY, pcf	102	99
	SATURATION, %	100	91

Maximum Unconfined Stress cut-off = 15% strain
Average Strain Rate = 0.08 in/min.

JACOBS ASSOCIATES
Engineers/Consultants

File No. 4520.0 | October 2013

Brown and Caldwell
South Bayside System Authority
Pump Station Predesign
San Mateo County, California
Unconfined Compression

Figure
C-3
(5 of 5)

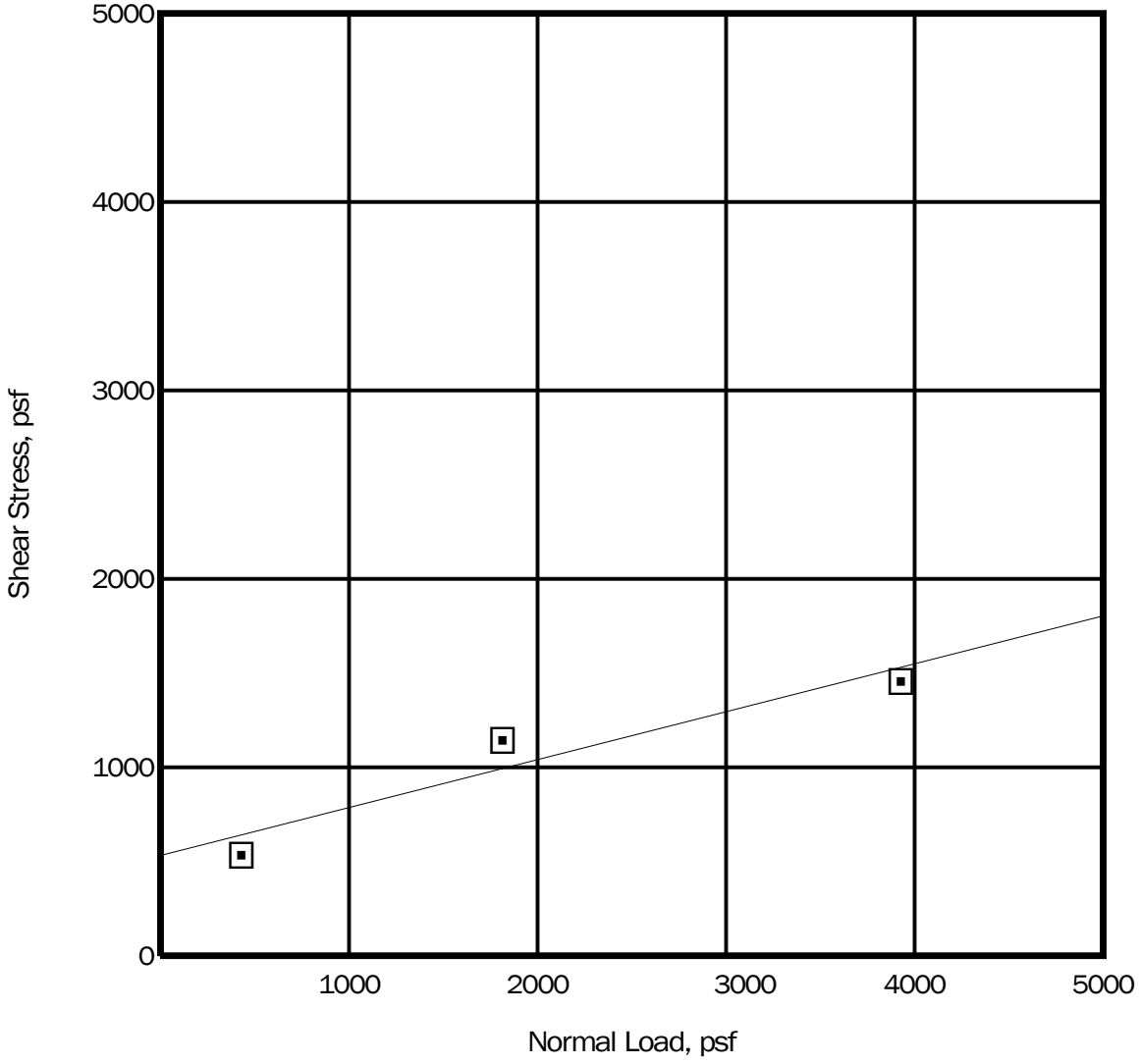

PS3 (San Carlos PS)							
TEST SYMBOL	GRAPH LINE	BORING SAMPLE NO.	DEPTH (ft)	APPARENT COHESION (p.s.f.)	INTERNAL FRICTION ANGLE (degrees)	AVE. DRY DENSITY (pcf)/ MOISTURE CONTENT (%)	
						BEFORE TEST	AFTER TEST
▣	———	B-1-11	28-28½	530	14	102/24	101/26

JACOBS ASSOCIATES
Engineers/Consultants

File No. 4520.0 | October 2013

Brown & Caldwell
South Bayside System Authority
Pump Station Predesign
San Mateo County, California

Direct Shear

Figure
C-4
(1 of 6)

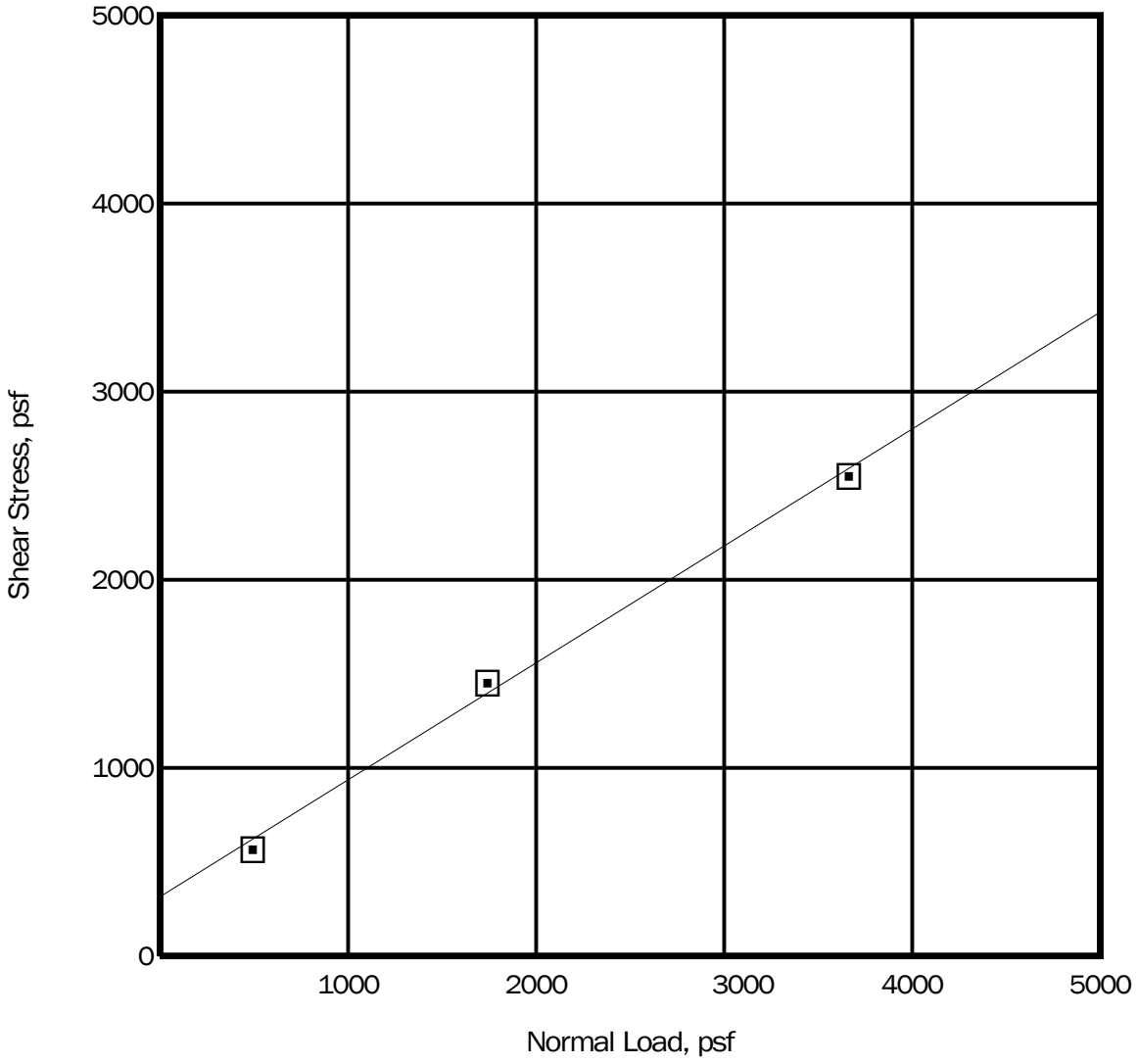

PS2 (Redwood City PS)							
TEST SYMBOL	GRAPH LINE	BORING SAMPLE NO.	DEPTH (ft)	APPARENT COHESION (p.s.f.)	INTERNAL FRICTION ANGLE (degrees)	AVE. DRY DENSITY (pcf)/ MOISTURE CONTENT (%)	
						BEFORE TEST	AFTER TEST
▣	———	B-2-9	28-28½	310	32	110/20	112/19

JACOBS ASSOCIATES
Engineers/Consultants

File No. 4520.0 | October 2013

Brown & Caldwell
South Bay System Authority
Pump Station Predesign
San Mateo County, California

Direct Shear

Figure
C-4
(2 of 6)

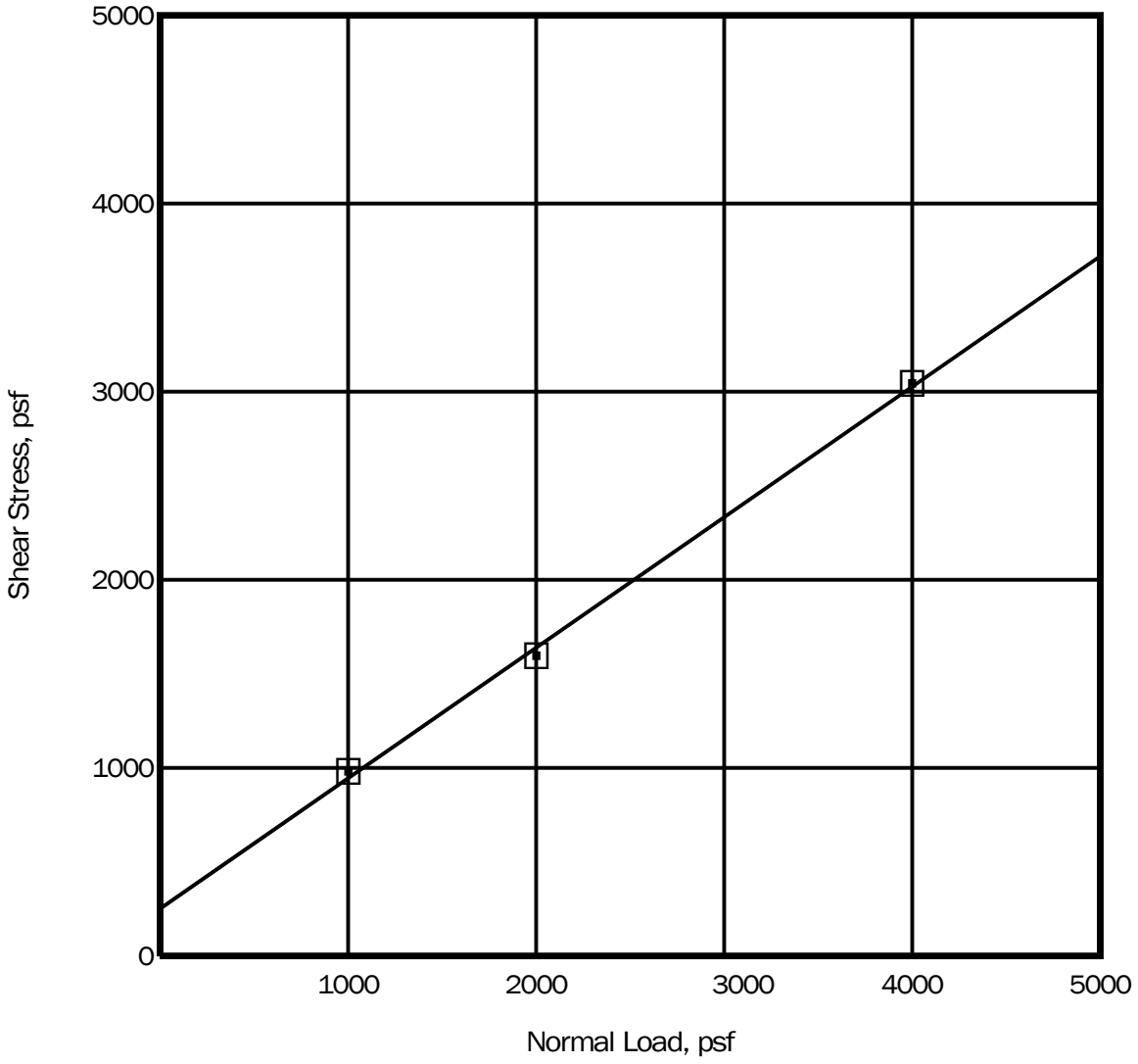

Belmont Gravity Sewer							
TEST SYMBOL	GRAPH LINE	BORING SAMPLE NO.	DEPTH (ft)	APPARENT COHESION (p.s.f.)	INTERNAL FRICTION ANGLE (degrees)	AVE. DRY DENSITY (pcf)/ MOISTURE CONTENT (%)	
						BEFORE TEST	AFTER TEST
▣	———	B3-5A	18-18½	260	35	105/16	105/20

JACOBS ASSOCIATES
Engineers/Consultants

File No. 4520.0 | October 2013

Brown and Caldwell
South Bayside System Authority
Pump Station Predesign
San Mateo County, California

Direct Shear

Figure
C-4
(3 of 6)

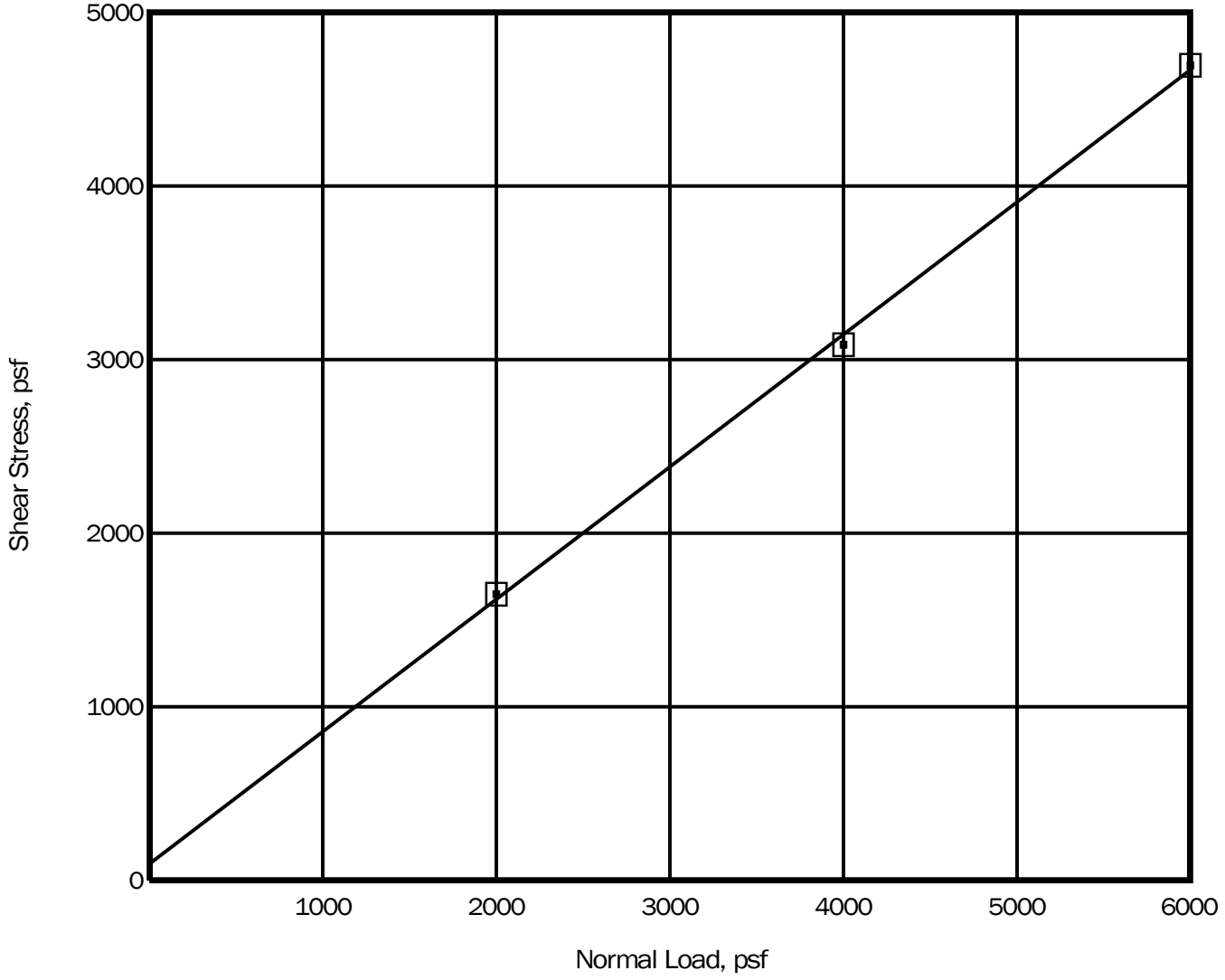

Belmont Gravity Sewer							
TEST SYMBOL	GRAPH LINE	BORING SAMPLE NO.	DEPTH (ft)	APPARENT COHESION (p.s.f.)	INTERNAL FRICTION ANGLE (degrees)	AVE. DRY DENSITY (pcf)/ MOISTURE CONTENT (%)	
						BEFORE TEST	AFTER TEST
▣	———	B5-12A & 12B	37½-38½	96	37	105/20	106/20

JACOBS ASSOCIATES
Engineers/Consultants

File No. 4520.0 | October 2013

Brown and Caldwell
South Bayside System Authority
Pump Station Predesign
San Mateo County, California

Direct Shear

Figure
C-4
(4 of 6)

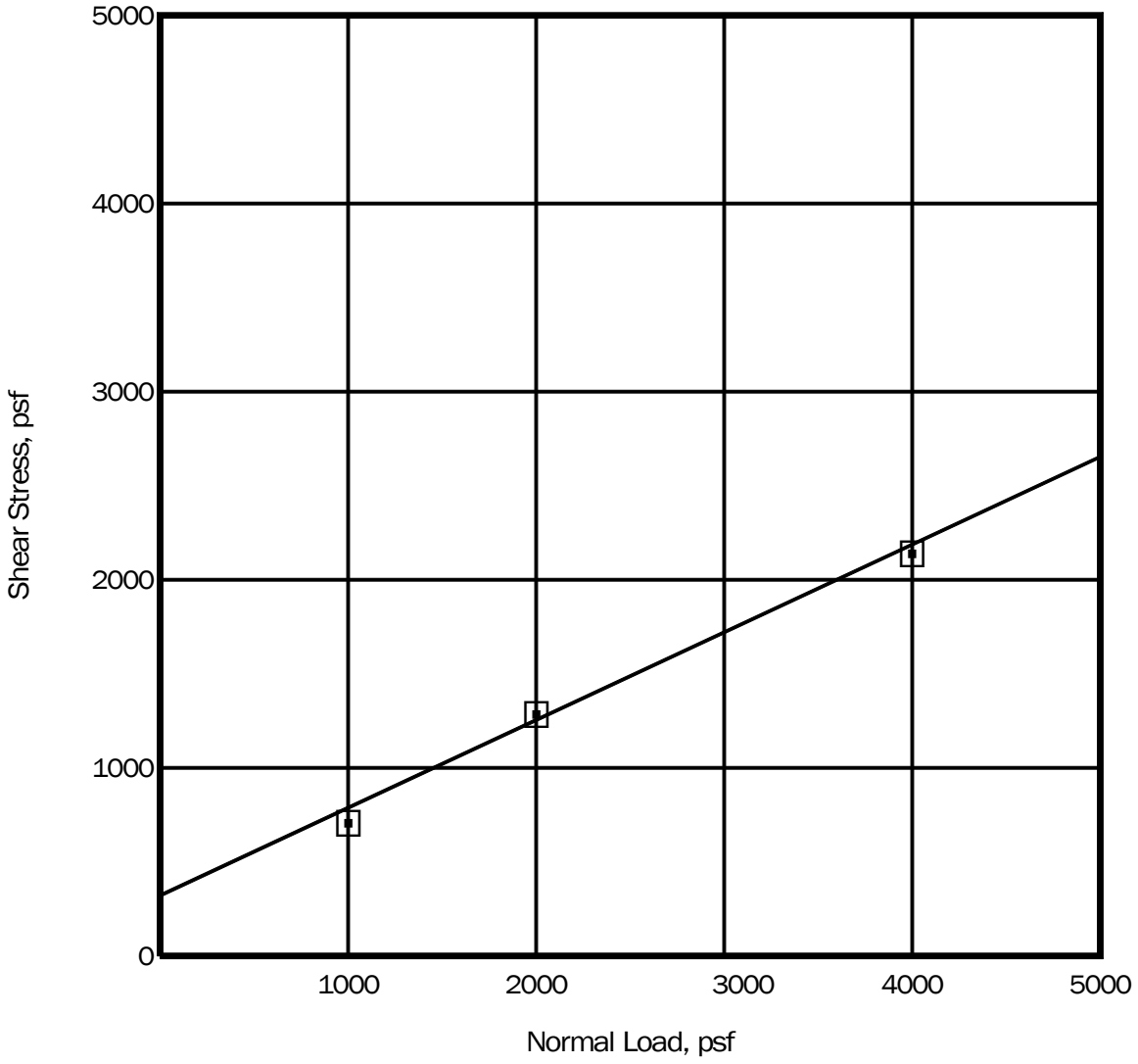

PS1 (Menlo Park PS)							
TEST SYMBOL	GRAPH LINE	BORING SAMPLE NO.	DEPTH (ft)	APPARENT COHESION (p.s.f.)	INTERNAL FRICTION ANGLE (degrees)	AVE. DRY DENSITY (pcf)/ MOISTURE CONTENT (%)	
						BEFORE TEST	AFTER TEST
▣	———	B6-5A	18-18½	321	25	92/27	93/28

JACOBS ASSOCIATES
Engineers/Consultants

File No. 4520.0 | October 2013

Brown and Caldwell
South Bayside System Authority
Pump Station Predesign
San Mateo County, California

Direct Shear

Figure
C-4
(5 of 6)

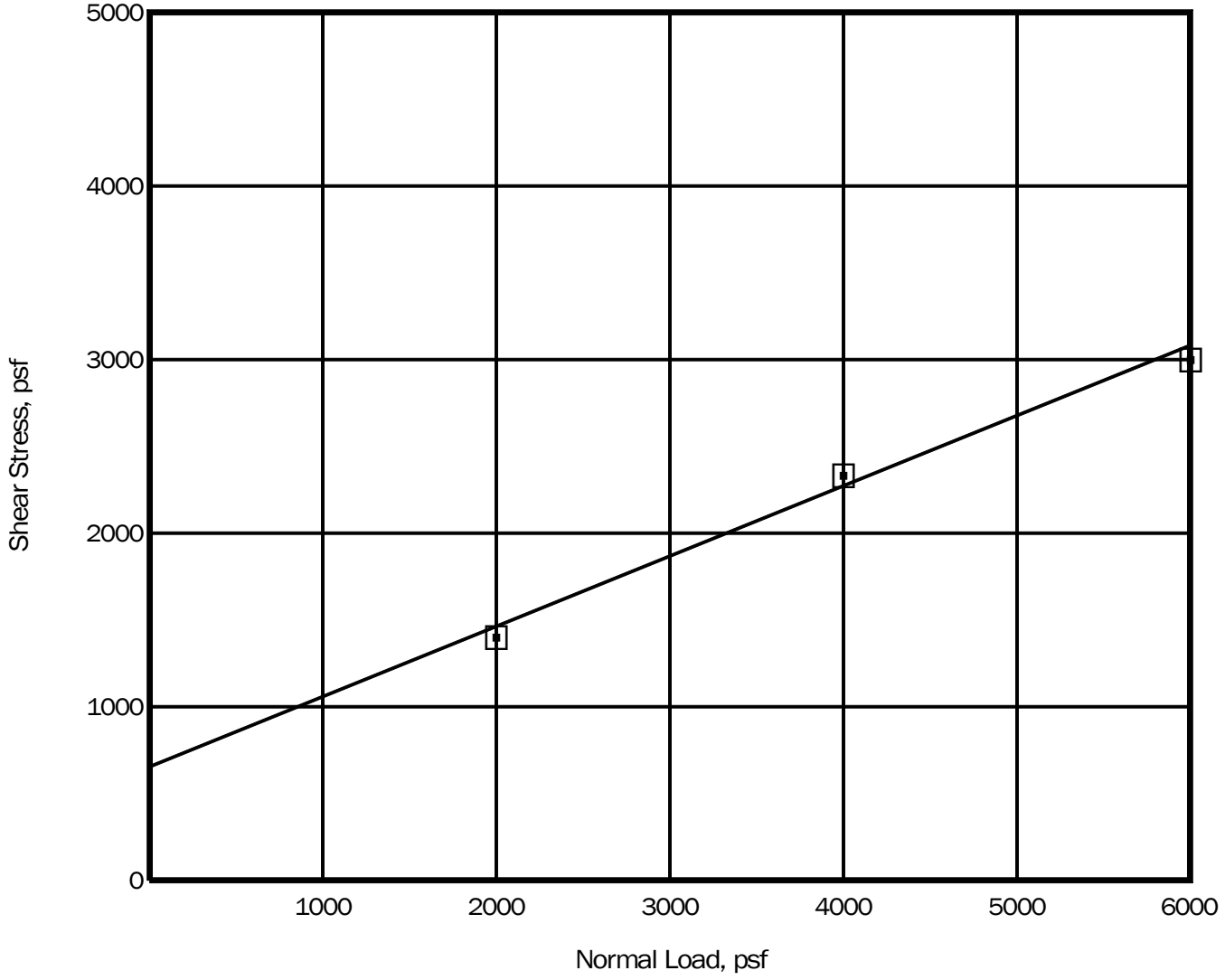

PS1 (Menlo Park PS)							
TEST SYMBOL	GRAPH LINE	BORING SAMPLE NO.	DEPTH (ft)	APPARENT COHESION (p.s.f.)	INTERNAL FRICTION ANGLE (degrees)	AVE. DRY DENSITY (pcf)/ MOISTURE CONTENT (%)	
						BEFORE TEST	AFTER TEST
▣	———	B6-13B	37½-38	645	22	90/31	90/30

JACOBS ASSOCIATES
Engineers/Consultants

File No. 4520.0 | October 2013

Brown and Caldwell
South Bayside System Authority
Pump Station Predesign
San Mateo County, California

Direct Shear

Figure
C-4
(6 of 6)

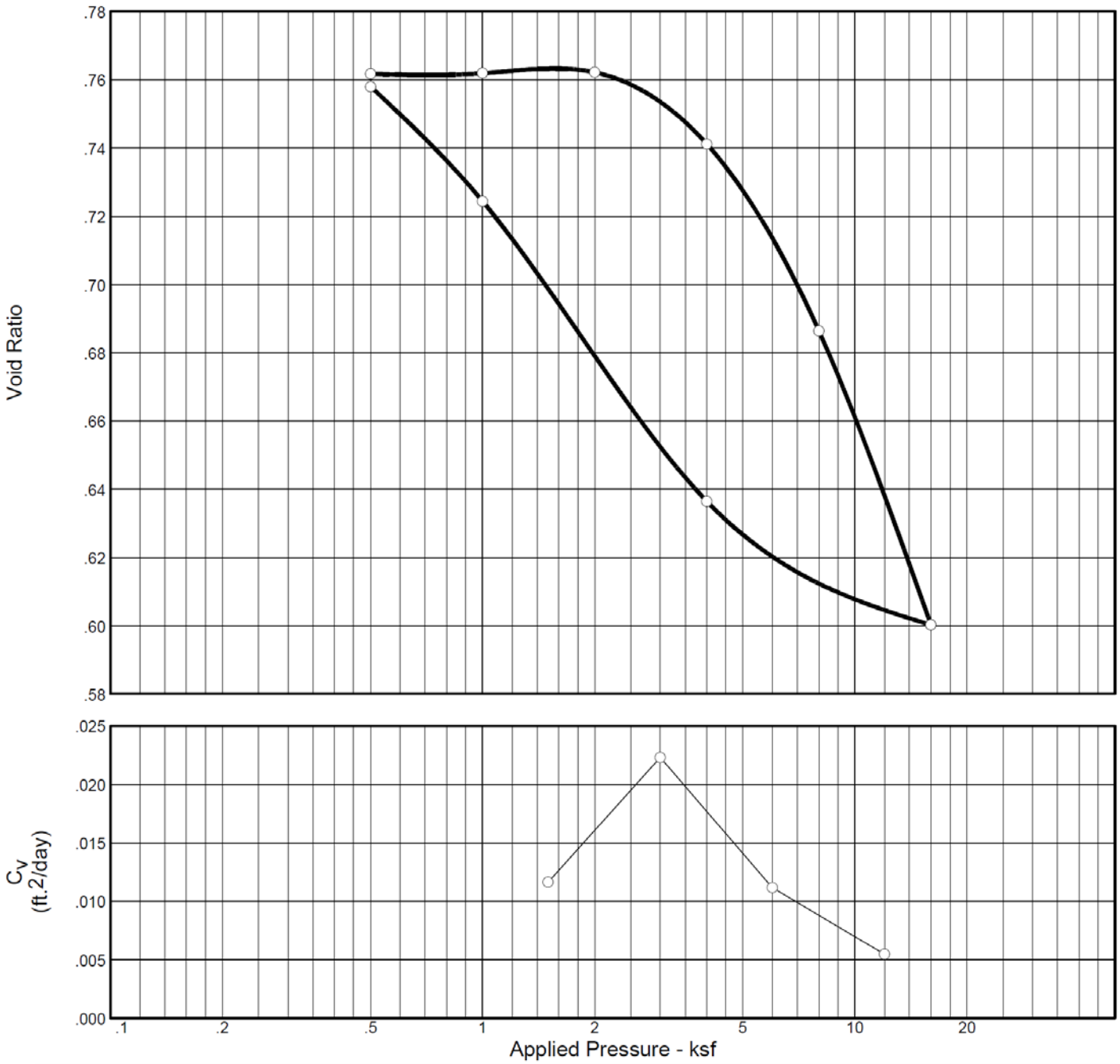

PS3 (San Carlos PS)									
TEST SYMBOL	BORING SAMPLE NO.	DEPTH (ft)	BEFORE TEST CONDITIONS			PRE-CONSOLIDATION PRESSURES (ksf)	C_r	C_c	e_o
			SATURATION (%)	MOISTURE CONTENT (%)	DRY DENSITY (pcf)				
—●—	B-1-13	32-33½	96	27	98	4.80	0.11	0.29	0.760

JACOBS ASSOCIATES
Engineers/Consultants

File No. 4520.0 | October 2013

Brown and Caldwell
South Bayside System Authority
Pump Station Predesign
San Mateo County, California

Consolidation

Figure
C-5
(1 of 4)

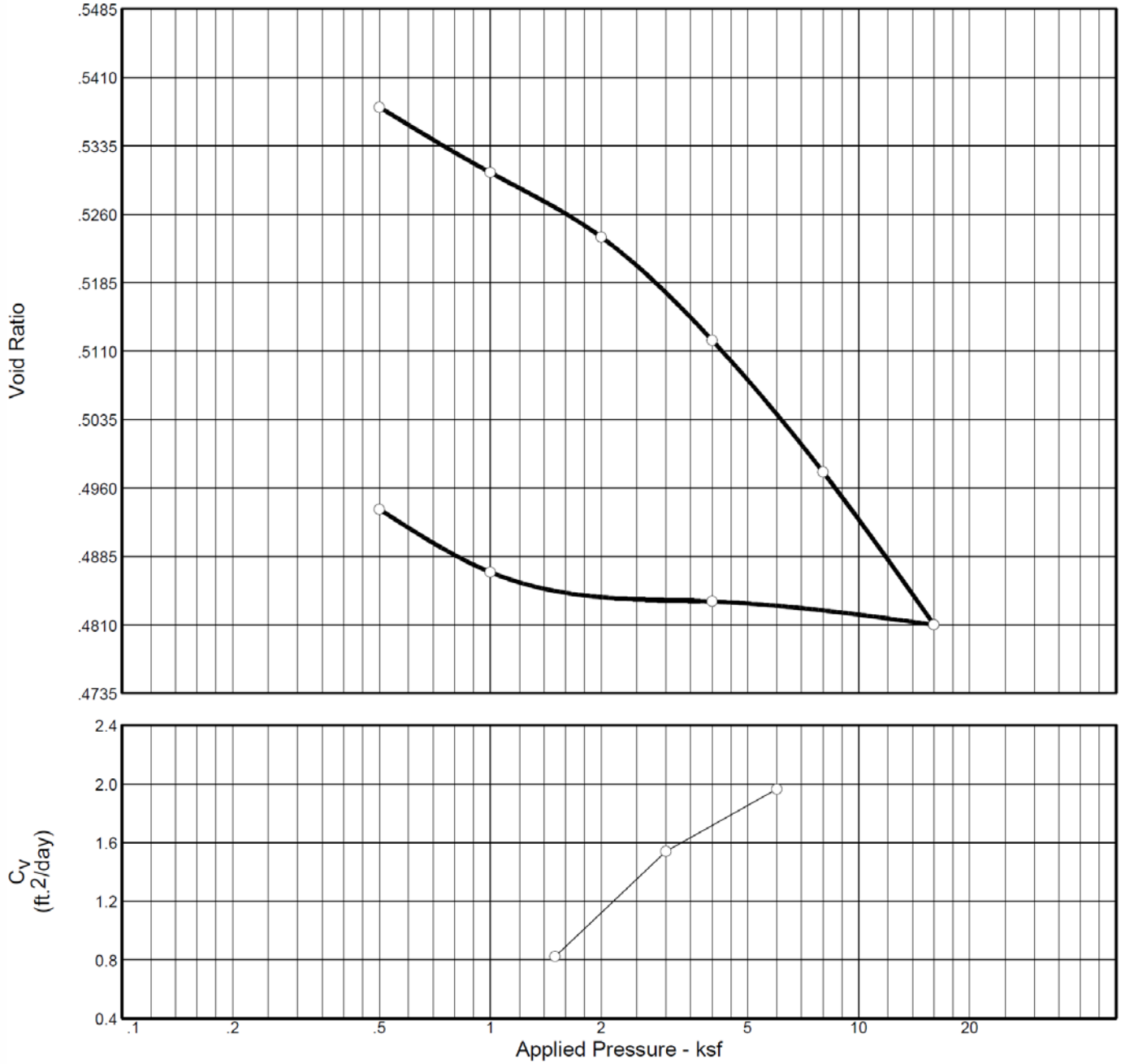

PS2 (Redwood City PS)									
TEST SYMBOL	BORING SAMPLE NO.	DEPTH (ft)	BEFORE TEST CONDITIONS			PRE-CONSOLIDATION PRESSURES (ksf)	C_r	C_c	e_o
			SATURATION (%)	MOISTURE CONTENT (%)	DRY DENSITY (pcf)				
—●—	B-2-11	33-33½	85	17	112	3.16	0.01	0.06	0.539

JACOBS ASSOCIATES
Engineers/Consultants

File No. 4520.0 | October 2013

Brown and Caldwell
South Bayside System Authority
Pump Station Predesign
San Mateo County, California
Consolidation

Figure
C-5
(2 of 4)

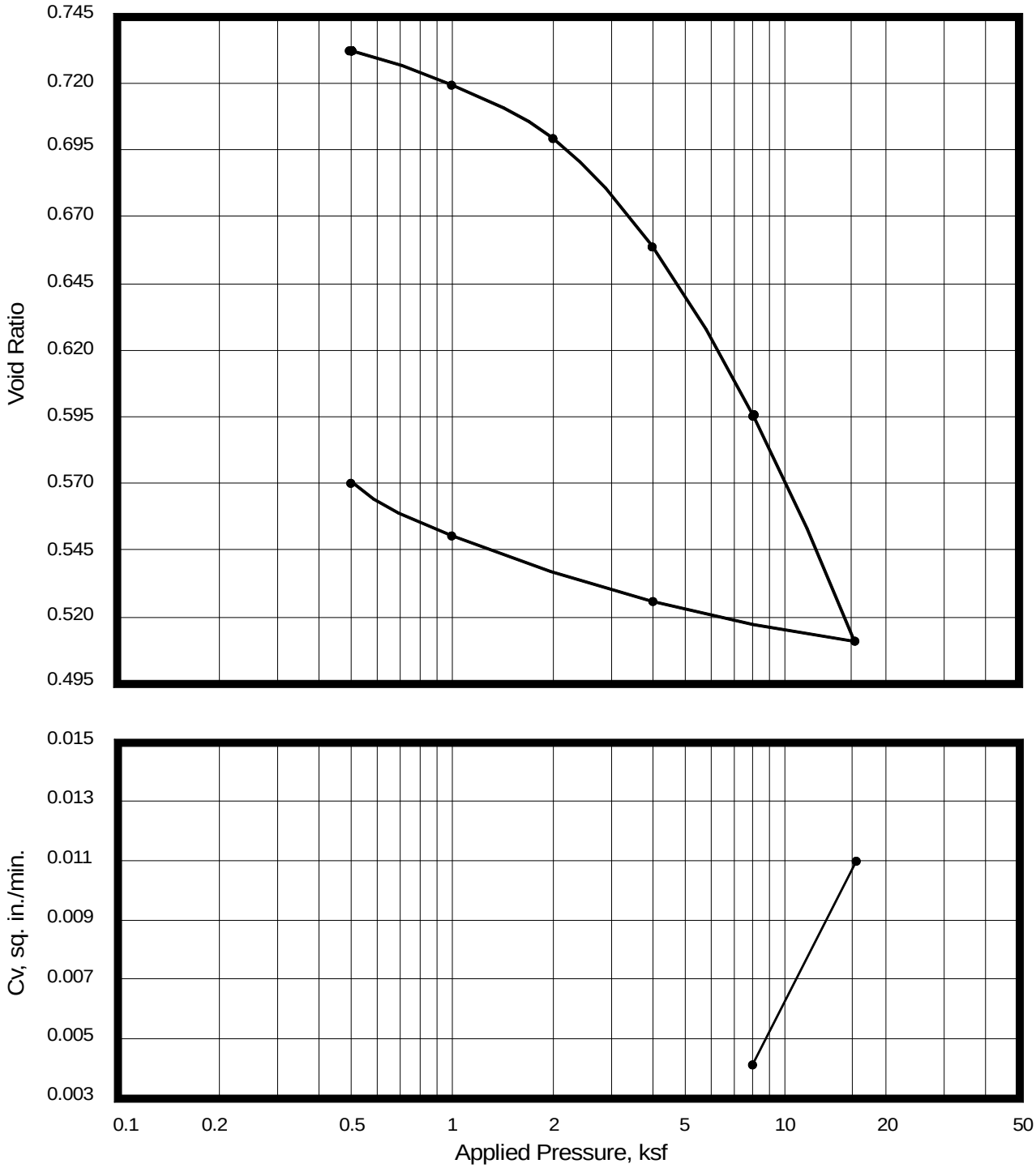

Belmont Gravity Sewer

TEST SYMBOL	BORING SAMPLE NO.	DEPTH (ft)	BEFORE TEST CONDITIONS			PRE-CONSOLIDATION PRESSURES (ksf)	C_c	e_o
			SATURATION (%)	MOISTURE CONTENT (%)	DRY DENSITY (pcf)			
—●—	B5-8A	28-28½	99	27	97	4.01	0.29	0.74

JACOBS ASSOCIATES
Engineers/Consultants

File No. 4520.0 | October 2013

Brown and Caldwell
South Bayside System Authority
Pump Station Predesign
San Mateo County, California

Consolidation

Figure
C-5
(3 of 4)

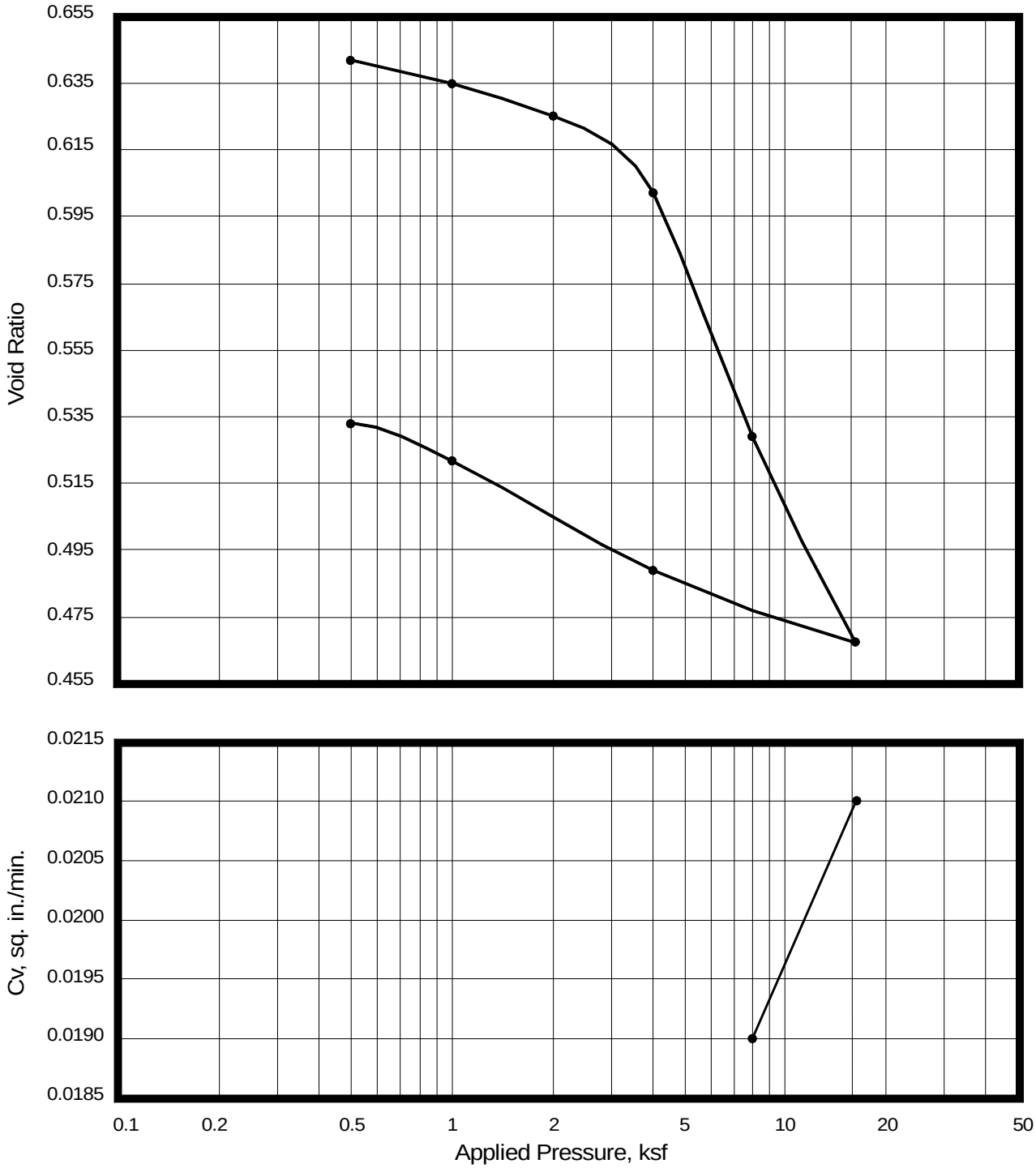

PS1 (Menlo Park PS)								
TEST SYMBOL	BORING SAMPLE NO.	DEPTH (ft)	BEFORE TEST CONDITIONS			PRE-CONSOLIDATION PRESSURES (ksf)	C_C	e_O
			SATURATION (%)	MOISTURE CONTENT (%)	DRY DENSITY (pcf)			
—●—	B6-11A	33-33½	97	24	102	3.90	0.24	0.66

JACOBS ASSOCIATES
Engineers/Consultants

File No. 4520.0 | October 2013

Brown and Caldwell
South Bayside System Authority
Pump Station Predesign
San Mateo County, California
Consolidation

Figure
C-5
(4 of 4)

Corrosion Test Results

SITE	SAMPLE NO.	RESISTIVITY saturated (ohm-cm)	pH	SULFATE (mg/kg)	CHLORIDE (mg/kg)
San Carlos PS	B-1-3	84*	7.2	340	2,700
Redwood City PS	B-2-3	1,200	9.1	130	320
Belmont Gravity Sewer	B-4-6	120	8.3	260	2,400 (1)
Menlo Park PS	B-6-2b	540	9.1	100	68
Test Method		CT 532	CT 532	CT 417	CT 422
Detection Limit		-	-	15	15

(1) Detection limit elevated to 75 mg/kg due to dilution

* Smaller box used as limited amount of soil.

JACOBS ASSOCIATES
Engineers/Consultants

File No. 4520.0 | October 2013

Brown and Caldwell
South Bayside System Authority
Pump Station Predesign
San Mateo County, California
Corrosion

Figure
C-6

Appendix D

Reference Boring RB-1 | Reference Boring RB-2 | Reference Boring RB-3 | Reference Boring RB-4

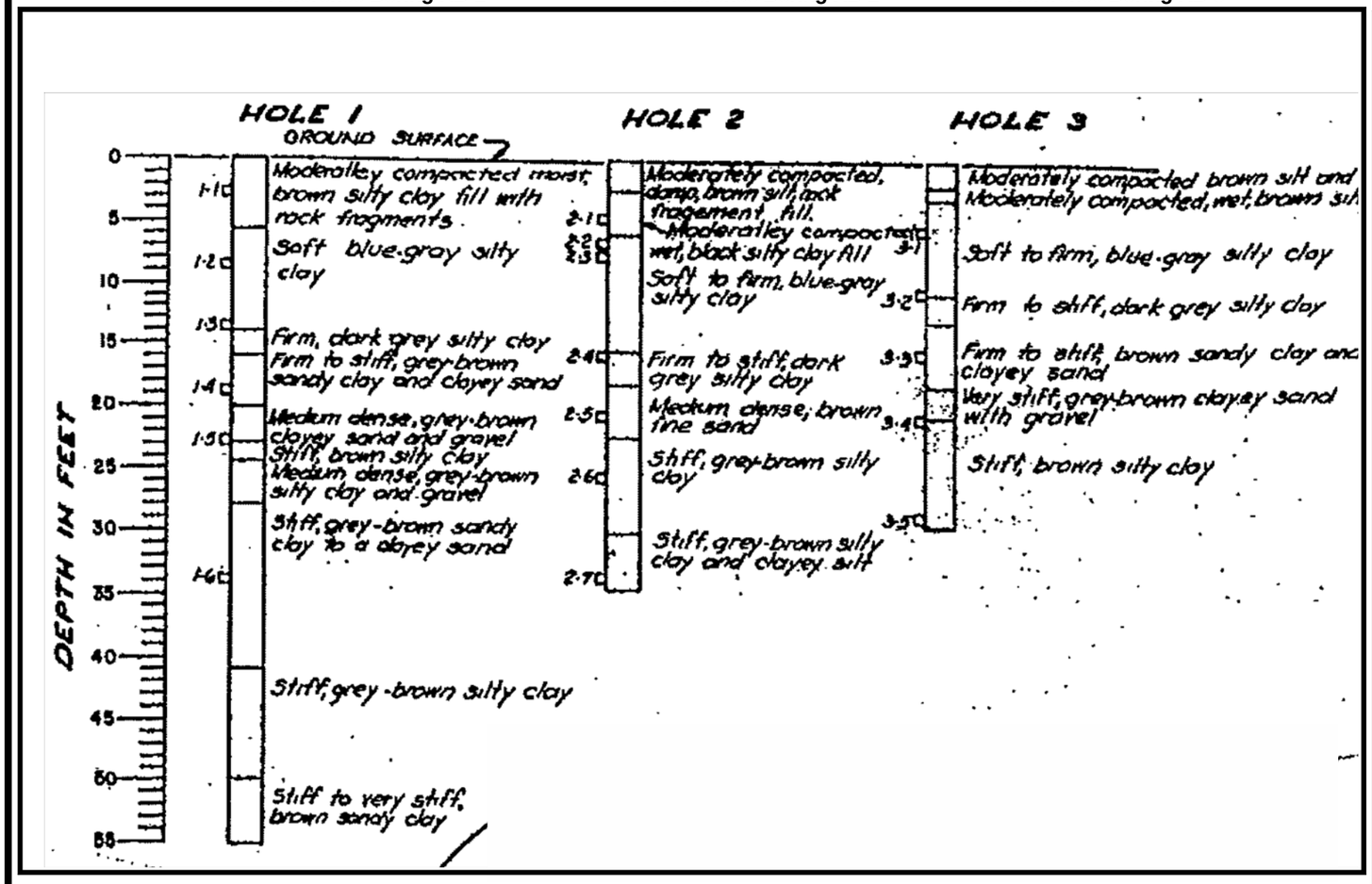

Reference: Holes 1, 2 and 3, Woodward Clyde - Sherard adn Associates, March 27, 1957.

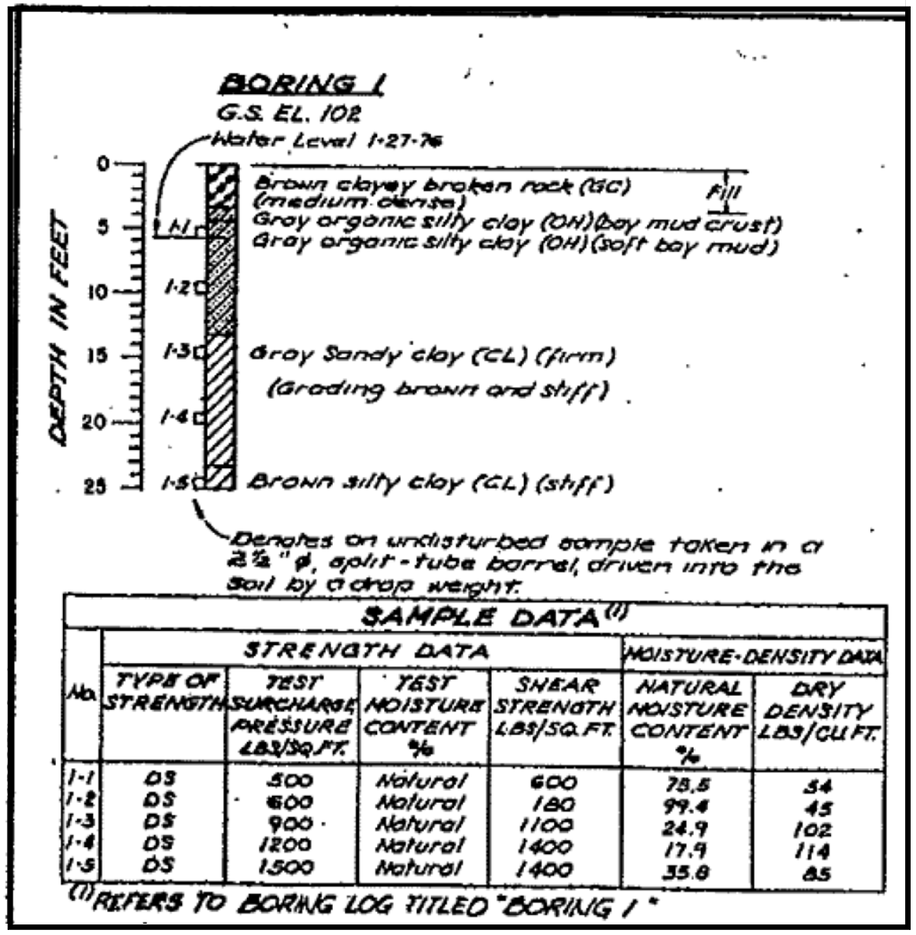

SAMPLE DATA[1]

No.	STRENGTH DATA				MOISTURE-DENSITY DATA	
	TYPE OF STRENGTH	TEST SURCHARGE PRESSURE LBS/SQ.FT.	TEST MOISTURE CONTENT %	SHEAR STRENGTH LBS/SQ.FT.	NATURAL MOISTURE CONTENT %	DRY DENSITY LBS/CU.FT.
1-1	DS	500	Natural	600	78.5	54
1-2	DS	600	Natural	180	99.4	45
1-3	DS	900	Natural	1100	24.9	102
1-4	DS	1200	Natural	1400	17.9	114
1-5	DS	1500	Natural	1400	35.8	85

[1] REFERS TO BORING LOG TITLED "BORING 1"

Reference: Boring 1, Cooper-Clark Associates, February 3, 1976.

JACOBS ASSOCIATES
Engineers/Consultants

File No. 4520.0 | October 2013

Brown and Caldwell
South Bayside System Authority
Pump Station Predesign
San Mateo County, California
PS3 (San Carlos PS)
Reference Borings 1, 2, 3 and 4

Figure
D-1

LOG OF BORING B-2①

LOCATION: Parking area at end of Maple St., east side of Highway 101 (see Figures 1 and 2).

GROUND SURFACE: Approx. El. 1'④

DEPTH feet	SAMPLE NO.	TYPE	PENETRATION RESISTANCE blows/ft.	③GROUNDWATER	DESCRIPTION ②	MOISTURE %	DRY DENSITY lbs./ft.³	LIQUID LIMIT	PLASTICITY INDEX	GRAIN SIZE Gravel (>#4 sieve) %	GRAIN SIZE Sand (#4 to #200 sieve) %	GRAIN SIZE Fines (<#200 sieve) %	UNCONFINED COMPRESSIVE STRENGTH kips/ft.²	DIRECT SHEAR Cohesion p.s.f.	DIRECT SHEAR Internal Friction Angle
					PARKING AREA: <4 inches asphalt concrete **GRAVELLY LEAN CLAY (CL) and CLAYEY GRAVEL (GC) - FILL** - varicolored - medium to low plasticity fines - dry										
5	1		pushed		**FAT CLAY (CH) - BAY MUD** - bluish black - high plasticity - soft to medium stiff - moist										
	2		8		CORROSION TEST Sample B-2-2 See Figure C-6	41	80						1.68		
	3		10		**FAT CLAY (CH)** - very dark gray with trace dark gray concretions - high plasticity - medium stiff to stiff - wet			62	39						
10	4		8		**SANDY LEAN CLAY (CL)** - light olive brown and dark gray - wet - medium plasticity										
	5		18		**FAT CLAY WITH SAND (CH)** - light olive brown and yellowish brown with few gray veins - high plasticity - stiff - few light gray concretions - wet	21	106			FINES 40% Silt 45% Clay			4.06		
15	6		17					58	34	0	15	85			
	7		14		**CLAYEY SAND (SC)** - olive brown - few gravel - medium dense - wet					5	53	42			
	8		14		**FAT CLAY (CH)** - dark greenish gray - stiff - trace sand and gravel - wet - high plasticity	29	95			FINES 21% Silt 21% Clay				440	27°
20	9		17		**LEAN CLAY (CL)** - gray with few yellowish brown mottles - medium plasticity - stiff - few sand - wet										
	10		10		**FAT CLAY (CH)** - light olive brown with few gray veins - high plasticity - stiff - trace gravel-size concretions - wet										
					SANDY LEAN CLAY (CL) - gray and yellowish brown - stiff - medium plasticity - wet										
					CLAYEY SAND (SC) - light olive brown - loose to medium dense - trace gravel - wet										
					LEAN TO FAT CLAY (CL/CH) - bluish gray - stiff - few sand - wet - medium to high plasticity										
					BORING CONTINUED AT 23 FEET ON FIGURE B-2 (2 OF 2)										

NOTES
① Drilled 10/21/10 using a Mobile B-24, 5" diameter solid stem augers, and a 30" drop by 140 lb. cathead sampling hammer.
② See report text and plates in Appendices A and C for definitions, lab test results, and additional soil descriptions.
③ Free groundwater level encountered at 8' after drilling. Static equilibrium groundwater depth is unknown at this time.
④ Projected elevation, structure, and new 60-inch pipeline depth data from RMC (see Figure 2).

GEOENGINEERS

File No. 19418-001-00 | December 2010

RMC Water and Environment
City of Redwood City
Walnut Street Interceptor Replacement Project
Redwood City, California
Log of Boring B-2

Figure **B-2** (1 of 2)

Reference: Log of Boring B-2, City of Redwood City Walnut Street Interceptor Replacement Project (GeoEngineers, 2010) - Figure 1 of 2.

JACOBS ASSOCIATES
Engineers/Consultants

File No. 5003.0 | October 2013

Brown and Caldwell
South Bayside System Authority
Pump Station Predesign
San Mateo County, California
PS2 (Redwood City PS) Reference Boring 1

Figure **D-2** (1 of 2)

LOG OF BORING B-2 (Continued)①

DEPTH feet	SAMPLE NO.	TYPE	PENETRATION RESISTANCE blows/ft.	GROUNDWATER	DESCRIPTION	MOISTURE %	DRY DENSITY lbs./ft.³	LIQUID LIMIT	PLASTICITY INDEX	GRAIN SIZE Gravel (>#4 sieve) %	GRAIN SIZE Sand (#4 to #200 sieve) %	GRAIN SIZE Fines (<#200 sieve) %	UNCONFINED COMPRESSIVE STRENGTH kips/ft.²	DIRECT SHEAR Cohesion p.s.f.	DIRECT SHEAR Internal Friction Angle
					BORING CONTINUED FROM 23 FEET ON FIGURE B-2 (2 OF 2)										
25	11		10		**SANDY LEAN CLAY (CL) and LEAN TO FAT CLAY WITH SAND (CL/CH)** - brownish yellow with few gray spots - medium to high plasticity - medium stiff - wet	25	101								
30	12		13		**SANDY LEAN CLAY (CL)** - brownish yellow - trace gravel - medium plasticity - medium stiff to stiff - stiff - wet	21	114								
	13A		-⑤		**WELL-GRADED SAND (SW)** - varicolored - few gravel - medium dense - wet Borehole sloughing below 30½' (see table below)										
35	13B		27		**POORLY GRADED SAND WITH SILT (SP-SM)** - varicolored - medium dense - wet					12	81	7			
	14		10		**SILTY LEAN CLAY (CL)** - gray - medium plasticity - stiff - wet										
40					**BOTTOM OF BORING AT 40 FEET**										
45															
50															

SLOUGH DEPTHS ON SAMPLING

Sample No.	Slough Depth*
2-13A	36"
2-13B	14"
2-14	54"

*- slough depth measured from intended sample depth.

NOTES
① See Notes 1 - 4 on Figure B-2 (1 of 2).
⑤ No blow count recorded for Sample 13A due to slough infilling of sample barrel before driving.

GEOENGINEERS

File No. 19418-001-00 | December 2010

RMC Water and Environment
City of Redwood City
Walnut Street Interceptor Replacement Project
Redwood City, California
Log of Boring B-2

Figure **B-2** (2 of 2)

Reference: Log of Boring B-2, City of Redwood City Walnut Street Interceptor Replacement Project (GeoEngineers, 2010)

JACOBS ASSOCIATES
Engineers/Consultants

File No. 5003.0 | October 2013

Brown and Caldwell
South Bayside System Authority
Pump Station Predesign
San Mateo County, California
PS2 (Redwood City PS)
Reference Boring 1 (con't)

Figure **D-2** (2 of 2)

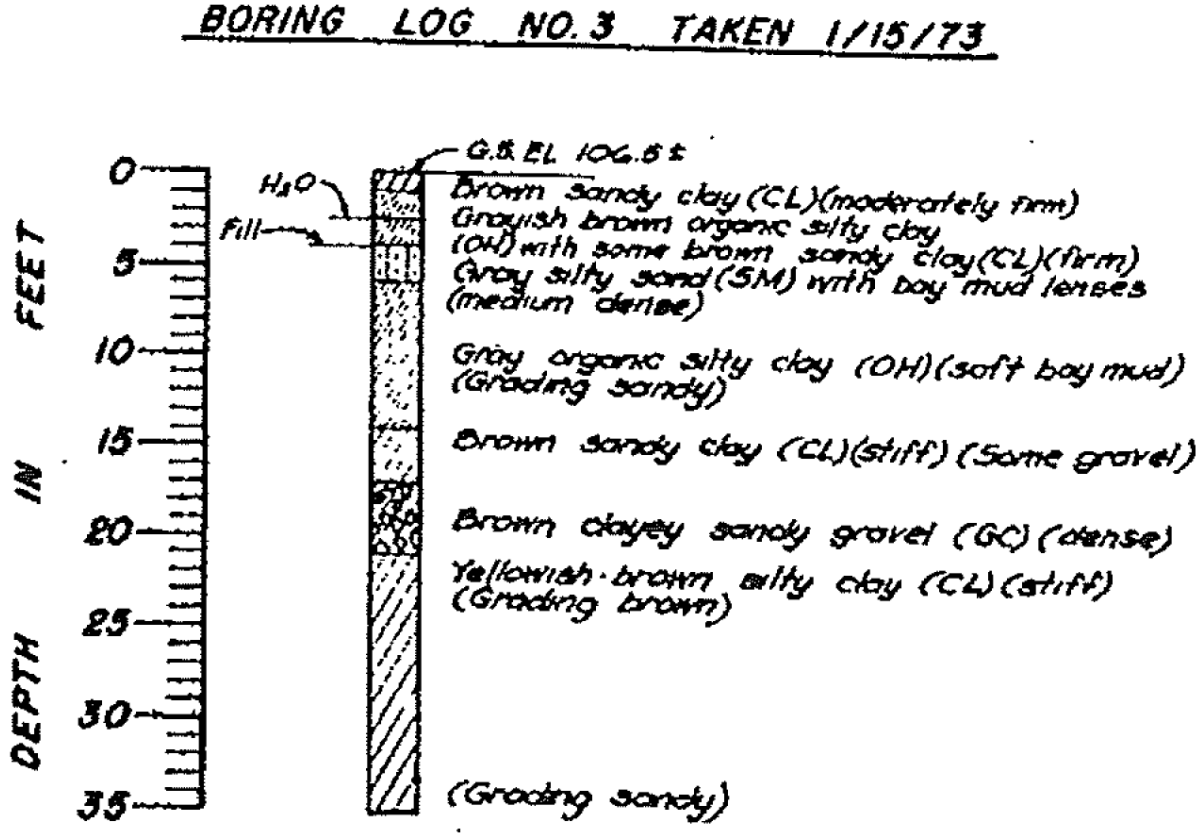

Reference: Boring No. 3, Belmont Pump Station Plant Layouts, Jenks & Harrison (8-77/9/79)

JACOBS ASSOCIATES Engineers/Consultants		**Brown and Caldwell** South Bayside System Authority Pump Station Predesign San Mateo County, California **Belmont Gravity Sewer** **Reference Boring 1**	Figure **D-3**
File No. 4520.0	October 2013		

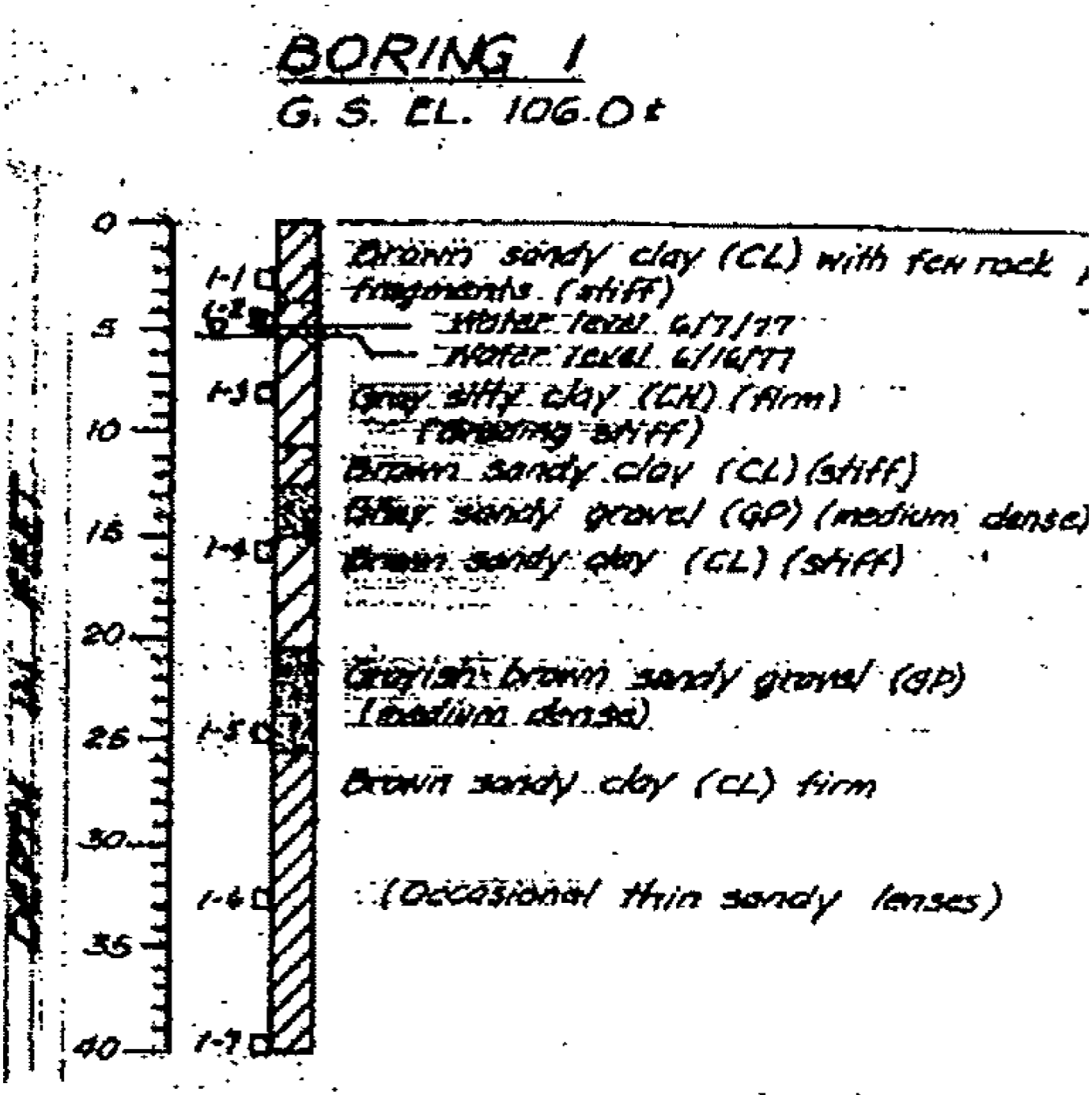

Reference: Boring 1, Menlo Park Pump Station, Cooper-Clark Assocaites (1977)

JACOBS ASSOCIATES Engineers/Consultants		**Brown and Caldwell** South Bayside System Authority Pump Station Predesign San Mateo County, California **PS1 (Menlo Park PS)** **Reference Boring 1**	Figure **D-4** (1 of 2)
File No. 5003.0	October 2013		

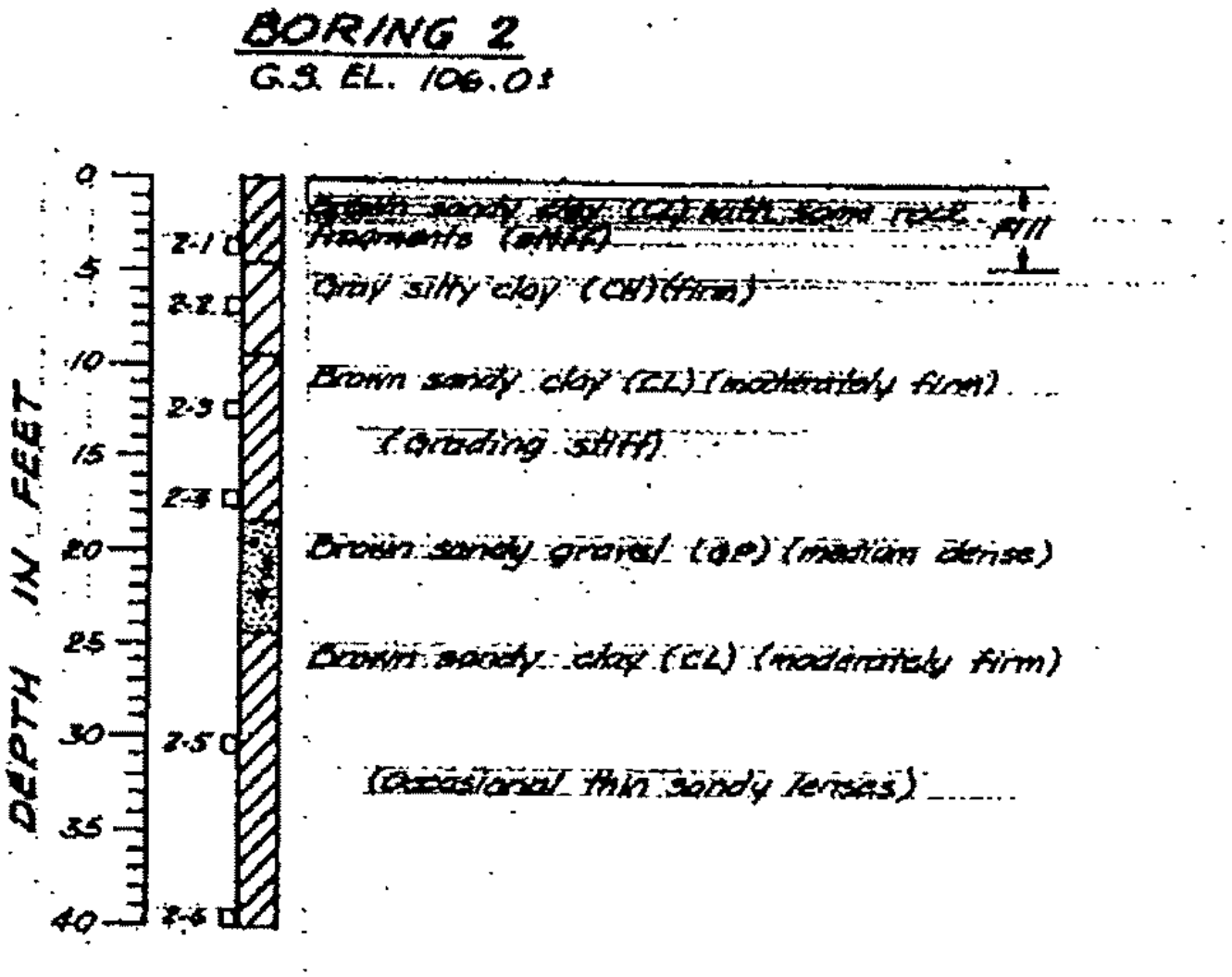

Reference: Boring 2, Menlo Park Pump Station, Cooper-Clark Assocaites (1977)

JACOBS ASSOCIATES Engineers/Consultants		**Brown and Caldwell** South Bayside System Authority Pump Station Predesign San Mateo County, California **PS1 (Menlo Park PS)** **Reference Boring 2**	Figure **D-4** (2 of 2)
File No. 5003.0	October 2013		

Appendix C: Draft Predesign Geotechnical Interpretive Report

DCM Consulting, Inc., November 25, 2013

This page intentionally left blank.

DCM Consulting, Inc.

Draft Technical Memorandum

P.O. Box 225, Lafayette, CA 94549, Telephone: 925.322.9590 www.dcmconsults.com

To:	Charlie Joyce Brown and Caldwell	Date:	November 25, 2013
From:	Dave Mathy DCM Consulting, Inc.	File:	No. 111
Subject:	Draft Predesign Geotechnical Interpretive Report (GIR) South Bayside System Authority Pump Station Predesign CIP #7010 Task Order No. 2012-01		
Reference A:	Geotechnical Data Report South Bayside System Authority Predesign of Planned Pump Stations Redwood City, San Carlos and Menlo Park, California By: Jacobs Associates Dated: October 22, 2013		
Reference B:	Conceptual Design of Pump Stations and Flow Equalization Facility South Bayside System Authority San Mateo County, California By: DCM/GeoEngineers Dated: September 15, 2009		

1.0 INTRODUCTION

This technical memorandum presents the Pre-Design Geotechnical Interpretive Report (GIR) completed by DCM Consulting, Inc. for South Bayside System Authority's (SBSA) Pump Station Predesign Project (CIP #7010). This GIR is based on project information provided by Brown and Caldwell and on a Predesign Geotechnical Data Report (GDR) completed for the project by Jacobs Associates (Reference A). This pump station predesign project is part of SBSA's overall system-wide capital improvements program and includes the following specific elements:

- Pump Station 1 (PS1), a new sanitary sewer pump station at the site of SBSA's existing Menlo Park pump station;
- Pump Station 2 (PS2), a new sanitary sewer pump station at the site of SBSA's existing Redwood City pump station;
- Pump Station 3 (PS3), a new sanitary sewer pump station at the site of SBSA's existing San Carlos pump station; and

- A new gravity sewer pipeline (Belmont Gravity Sewer), between SBSA's existing Belmont pump station and PS3.

The predesign GDR completed by Jacobs Associates includes one test boring to 50 feet deep at PS1, PS2 and PS3 and three test borings to depths of 25 to 45 feet deep along the Belmont Gravity Sewer alignment. The pump stations will include a deep pump station structure as well as surface and near surface to intermediate depth structures including: fuel storage pad (at surface), chemical storage pad (at surface), electrical transformer pad (at surface), surge control tank (at surface at PS2 and PS3 only), valve vault (about 10 to 12 feet deep), flow meter vault (about 10 to 12 feet deep), and manhole/flow control structure (about 5 to 6 feet shallower than the bottom of the pump station wet well excavation). The Belmont Gravity Sewer will be a 36-inch-inside-diameter pipeline approximately 4,400 feet long with invert depths of about 22.5 feet to 27 feet. Based on the depth to invert, surface and existing utility constraints, soil and groundwater conditions and SBSA experience, the Belmont Gravity Sewer will be installed by microtunnel pipe jacking. Microtunneling will require up to 9 shafts for an average shaft spacing and microtunnel drive length of about 550 feet. The gravity pipeline will allow for direct jacking of the product pipe (i.e., single-pass installation, no casing). The following Table No. 1 summarizes the main project components with depth of excavations and geotechnical conditions (geotechnical conditions from the boring logs and laboratory test results in the GDR, Reference A).

Table 1 – Summary of Subsurface Conditions

	Max. Depth of Excav.[1]	Ref. Boring	Depth to Ground-water[2]	Fill Thick-ness	YBM[3]	Soil at and below Base of Max. Excavation			
						Description	Average N-value[4]	Su[5]	OCR[6]
PS1	26 ft.	B-6	5 ft.	5 ft.	N.E.[7]	Fat Clay (CH)	13 (stiff)	1,500 psf	1.8
PS2	30 ft.	B-2	14.5 ft.	5.5 ft.	N.E.	Lean Clay (CL)	13 (stiff)	1,500 psf	1.3
PS3	34 ft.	B-1	9 ft.	7.5 ft.	7.5 to 16.5 ft.	Lean Clay (CL)	13 (stiff)	(1,800 psf)	2.1
BGS[8]	23 to 27 ft.	B-3, B-4, B-5	11 ft., 8 ft., 7 ft.	2 to 5.5 ft.	2 to 16 ft.	Lean to Fat Clay (CL to CH)	12 (stiff)	(1,000 psf)	--

1. Below ground surface, rounded to the nearest foot.
2. At time of drilling, not equilibrium groundwater depth.
3. Young Bay Mud depth interval.
4. Standard Penetration Test Blow Count (ASTM D1586).
5. Undrained shear strength estimates by N-value or (measured in lab).
6. Over Consolidation Ratio (from consolidation tests).
7. Not encountered.
8. Belmont Gravity Sewer.

2.0 CONCLUSIONS AND RECOMMENDATIONS

2.1. General

Descriptions of individual pump station development history and geologic and seismic setting are contained in the Conceptual Design of Pump Stations and Flow Equalization Facility report by DCM/GeoEngineers (Reference B). The three project pump station sites; PS1 (Menlo Park), PS2 (Redwood City) and PS3 (San Carlos) as well as the Belmont Gravity Sewer are located on the western margin of San Francisco Bay within or immediately adjacent to reclaimed tidal flats. The tidal flat reclamation process started in about the 1930s and 1940s and included construction of drainage channels and levees and then placing artificial areal fills. All predesign test borings for the project encountered artificial fill (see Table 1). The composition and consistency of artificial fills is highly variable and can range from non-cohesive sands and gravels to cohesive clays with oversize natural and manmade materials (e.g., cobble to boulder size). Typically in this Bay margin area, the artificial fills are underlain by Young Bay Mud (YBM). YBM was encountered in test boring B-1 at PS3 (San Carlos) and in reference borings at PS3, reference Boring 1 at PS2 (Redwood City) and in B-4 and B-5 along the Belmont Gravity Sewer alignment and reference Boring 1 along the Belmont Gravity Sewer alignment. The project elements are at the fringe of YBM deposition over older alluvium and therefore YBM deposits, where encountered, are generally of limited thickness. The YBM soils are characterized by extremely high water content, low dry density, low shear strength and high compressibility. Where YBM was not encountered the shallow native soils immediately below artificial areal fills are typically of low quality in terms of strength and compressibility. The YBM is underlain by much stiffer (and older) alluvium referred to as Old Bay Clay. The Old Bay Clay is characterized by lower water content, higher dry density, higher shear strength and lower compressibility (see the descriptions of soils at and below the base of excavations in Table No. 1). The quality of soils (i.e., shear strength and compressibility) in all predesign test borings is noticeably of better consistency at depths of about 20 feet and greater composed predominantly of stiff lean to fat clays of the Old Bay Clay. The Old Bay Clays are known to contain strata of loose to dense sands of relatively high permeability that can transmit large volumes of groundwater and can be pressurized (i.e., artesian). These sand strata can be problematic with respect to excavation base stability and liquefaction settlement. Three of the predesign test borings did encounter limited strata (2 to 5.5 feet thick) of loose to medium dense, non-cohesive sands (see B-2 from about 18 to 23.5 feet, B-5 from about 32 to 34 feet, and B-6 from about 20 to 24 feet) within the Old Bay Clays. In addition, reference boring 1 at PS 2 (Redwood City) encountered a clean sand layer about 6.5 feet thick starting at a depth of about 30 feet. Gravels are occasionally encountered on a limited basis within the Old Bay Clays in the project areas (i.e., along the margin of San Francisco Bay and YBM deposition). Cobbles and boulders have not been encountered within the Old Bay Clays within this project's depths.

Groundwater was encountered in all predesign borings (see Table 1). However, the groundwater levels noted on the boring logs time of drilling measurements and are not stabilized, equilibrium groundwater levels. Along the project area equilibrium groundwater levels are typically at and above the contact between artificial fill and YBM or older alluvium. For design and construction purposes, the groundwater level should be assumed to be at the ground surface. Soils logged in the predesign borings of the GDR did not encounter sand/gravel strata that would be a source of artesian groundwater pressure below the base of excavations. However, reference boring 1 at PS 2 (Redwood City) did

encounter a 6.5 foot thick layer of clean sand starting at a depth of about 30 feet. Recommendations for additional final design investigation to evaluate the presence of sand layers and artesian groundwater pressures are discussed in Section 2.6.

2.2. Pump Station and Microtunnel Shaft Excavations

Pump station excavations will vary in depth from 26 to 34 feet deep. Pump station pipeline and associated subsurface structure excavations will be variable but as much as 20 to 28 feet deep. Microtunnel shaft excavations will vary in depth from 26 to 30 feet deep. All project excavations will require vertical shoring (i.e., no side-sloped excavations). All project excavations can be made with appropriately sized conventional excavation equipment. Fill materials will be encountered including one, or a combination of,, the following:

- Areal fills placed as part of the 1930s and 1940s tidal flat reclamation projects. These fills are highly variable in composition and consistency and can contain oversize natural and manmade materials. For example, cobble and boulder size rocks from hillside bedrock excavations to the west and concrete rubble.

- Structure backfill around the existing three SBSA pump stations. These backfills can be granular and non-cohesive soils that are unstable in open cuts (i.e., no stand-up time) and can store and transmit large quantities of groundwater.

- Pipeline and utility trench backfill. Trench backfill and pipe bedding and pipe embedment materials are often granular and non-cohesive soils that are unstable in open cut (i.e., no stand-up time) and can store and transmit large quantities of groundwater.

Native soils below the artificial fill consist of either YBM or alluvium including Old Bay Clays. All soils within project excavations should be assumed to be consistent with Cal OSHA Type C soil. For purposes of shoring design, groundwater should be assumed to be at the ground surface. All project excavations must be fully shored and supported with “watertight” shoring such as internally braced interlocking sheetpiles. Any gaps in shoring, such as at pipeline penetrations, must be fully sealed to maintain excavations “watertightness”. Typical methods for sealing shoring gaps include grouting with jet grouting the preferred alternative. With a “watertight” shoring system, external dewatering should not be required. External dewatering is not advisable as it can cause subsidence of soft ground and settlement of nearby pipelines, utilities and structures. Internal dewatering can be kept to a minimum by establishing adequate toe embedment of sheetpiles to form a cutoff to groundwater inflows. The minimum toe embedment for sheetpiles in these soil and groundwater conditions is 15 feet below base of excavation.

Draft GIR Note: Additional recommendations for shoring pressure diagrams can be provided, if needed for project predesign.

2.3. Pump Station Structures

2.3.1. Deep Pump Station Structures

The following are the geotechnical design criteria used to develop foundation recommendations for deep pump station structures:

- The soil conditions at and below the base elevation of all three pump stations consists of stiff clays (Old Bay Clay) that will adequately support uniformly loaded mat foundations. Pile foundations are not required for the below grade pump stations. Assume mat foundation design for all three pump stations.

- All compensated loading, no net positive loading (i.e. the applied mat foundation load is equal to or less than the effective weight of soil removed for each pump station).

- All pump station mat foundation settlement to be limited to less than 1 inch.

- Design for groundwater level at the ground surface.

2.3.1.1. PS1 – Menlo Park Pump Station

1. Allowable mat bearing pressure (DL = LL) = 1,800 psf with a one-third increase for transient seismic loads.

2. Modulus of subgrade reaction (k) = 75 tcf. This k value is for a 1’ x 1’ steel plate and must be modified for mat size (e.g. see “Foundation Size Effect on Modulus of Subgrade Reaction in Clayey Soil” by Moayed and Janbaz).

3. Poisson’s Ratio = 0.50

4. Young’s Modulus = 900,000 psf.

5. Applied static lateral pressure for pump station walls, use At-rest earth pressure plus hydrostatic pressure = 95 pcf triangular loading.

6. Applied surcharge loading = 240 psf rectangular loading from the ground surface to 10 feet deep and 100 psf from 10 feet to 20 feet deep.

7. Seismic design, site classification = Site Class D.

8. Applied dynamic earth pressure (seismic loading) = 20 x H psf rectangular loading where H is the wall height. Apply resultant between 0.50 and 0.60 up from base of wall.

9. Ultimate Passive earth pressure = 150 pcf.

10. Coefficient of base friction at mat to native soil contact = 0.30.

11. For structure buoyancy, assume that groundwater is at the ground surface. To resist buoyancy, the buoyant weight of pump station backfill above a foundation lip may be taken as 80 pcf (assumes aggregate backfill) and the coefficient of friction between the pump station backfill and pump station wall may be taken as 0.35 (assumes aggregate backfill). The minimum factor of safety against buoyant uplift should be 1.5.

2.3.1.2. PS 2 – Redwood City Pump Station

1. Allowable mat bearing pressure (DL = LL) = 2,100 psf with a one-third increase for transient seismic loads.

2. Modulus of subgrade reaction (k) = 75 tcf. This k value is for a 1' x 1' steel plate and must be modified for mat size (e.g. see "Foundation Size Effect on Modulus of Subgrade Reaction in Clayey Soil" by Moayed and Janbaz).

3. Poisson's Ratio = 0.50

4. Young's Modulus = 900,000 psf.

5. Applied static lateral pressure for pump station walls, use At-rest earth pressure plus hydrostatic pressure = 90 pcf triangular loading.

6. Applied surcharge loading = 240 psf rectangular loading from the ground surface to 10 feet deep and 100 psf from 10 feet to 20 feet deep.

7. Seismic design, site classification = Site Class D.

8. Applied dynamic earth pressure (seismic loading) = 20 x H psf rectangular loading where H is the wall height. Apply resultant between 0.50 and 0.60 up from base of wall.

9. Ultimate Passive earth pressure = 200 pcf.

10. Coefficient of base friction at mat to native soil contact = 0.40.

11. For structure buoyancy, assume that groundwater is at the ground surface. To resist buoyancy, the buoyant weight of pump station backfill above a foundation lip may be taken as 80 pcf (assumes aggregate backfill) and the coefficient of friction between the pump station backfill and pump station wall may be taken as 0.35 (assumes aggregate backfill). The minimum factor of safety against buoyant uplift should be 1.5.

2.3.1.3. PS 3 – San Carlos Pump Station

1. Allowable mat bearing pressure (DL = LL) = 2,400 psf with a one-third increase for transient seismic loads.

2. Modulus of subgrade reaction (k) = 75 tcf. This k value is for a 1′ x 1′ steel plate and must be modified for mat size (e.g. see "Foundation Size Effect on Modulus of Subgrade Reaction in Clayey Soil" by Moayed and Janbaz).

3. Poisson's Ratio = 0.50

4. Young's Modulus = 900,000 psf.

5. Applied static lateral pressure for pump station walls, use At-rest earth pressure plus hydrostatic pressure = 105 pcf triangular loading.

6. Applied surcharge loading = 240 psf rectangular loading from the ground surface to 10 feet deep and 100 psf from 10 to 20 feet deep.

7. Seismic design, site classification = Site Class D.

8. Applied dynamic earth pressure (seismic loading) = 20 x H psf rectangular loading where H is the wall height. Apply resultant between 0.50 and 0.60 up from base of wall.

9. Ultimate Passive earth pressure = 100 pcf.

10. Coefficient of base friction at mat to native soil contact = 0.30.

11. For structure buoyancy, assume that groundwater is at the ground surface. To resist buoyancy, the buoyant weight of pump station backfill above a foundation lip may be taken as 80 pcf (assumes aggregate backfill) and the coefficient of friction between the pump station backfill and pump station wall may be taken as 0.35 (assumes aggregate backfill). The minimum factor of safety against buoyant uplift should be 1.5.

2.3.2. At-Grade, Near-Grade or Intermediate-Grade Pump Station Structures

The following are the geotechnical design criteria used to develop foundation recommendations for at-grade, near grade or intermediate grade structures at the pump stations:

- All structures to be supported by mat foundations. Pile foundations are not required for relatively light at-grade structures.
- All mat and structure foundation settlement to be limited to less than 1 inch.
- Design groundwater elevation will be at the ground surface.

2.3.2.1. PS 1 – Menlo Park Pump Station

1. For mat foundations at the ground surface (i.e. fuel storage pad, chemical storage pad, electric transformer pad):

a. Surficial soils consist of about 5 feet of areal fill composed of medium dense Clayey Sand with Gravel (SC) (see B-6 in GDR). All mat foundations at the ground surface must be underlain by a minimum of 18 inches of Class 2 aggregate base rock compacted to a minimum of 95% relative compaction. The Class 2 aggregate base rock to extend a minimum of 2 feet beyond the perimeter of the mats.

b. Allowable mat bearing pressure (DL + LL) = 1,000 psf with a one-third increase for transient wind and seismic loads.

c. Modulus of subgrade reaction (k) = 50 tcf. This k value is for a 1' x 1' steel plate and must be modified for mat size (e.g. see "Foundation Size Effect on Modulus of Subgrade Reaction in Clay Soils" by Moayed and Janbez).

d. Poisson's Ratio = 0.40.

e. Young's Modulus = 600,000 psf.

f. Ultimate coefficient of base friction = 0.35.

g. Seismic design, Site Classification = Site Class D.

2. For the valve vault and flow meter structures (about 10 to 12 feet deep):

a. At 10 to 12 feet deep the valve vault and flow meter vault will be directly underlain by medium stiff Fat Clay (CH) to loose Clayey Sand (SC) (see B-6 in GDR). The vaults must be underlain by a minimum of 6 inches of Class 2 aggregate base rock which is in turn underlain by a minimum of 12 inches of foundation rock (¾-inch by 1½-inch crushed rock) wrapped with non-woven geotextile filter fabric. Foundation rock to be compacted in place by a minimum of 3 passes of a vibra-plate compactor. Class 2 aggregate base rock to be compacted to a minimum of 95% relative compaction.

b. Allowable vault bearing pressure (DL + LL) = 800 psf with a one-third increase for seismic loads.

c. Modulus of subgrade reaction (k) = 25 tcf. Modify for vault size per note 1.c.

d. Poisson's ratio = 0.50.

e. Young's modulus = 600,000 psf.

f. Applied static lateral earth pressure on vault walls, use at-rest earth pressure plus hydrostatic pressure = 95 pcf triangular loading.

g. Applied surcharge loading = 240 psf rectangular loading from the ground surface to 10 feet deep and 100 psf from 10 to 20 feet deep.

h. Applied dynamic earth pressure (seismic loading) = 20 x H psf rectangular loading where H = vault depth. Apply resultant between 0.5 and 0.6H up from the base of the vault.

i. Seismic design, site classification = Site Class D.

j. Ultimate passive earth pressure = 150 pcf triangular loading.

k. Ultimate coefficient of base friction = 0.30.

l. For vault buoyancy, assume that groundwater is at the ground surface. To resist buoyancy, the buoyant weight of the vault backfill above a foundation lip may be taken as 80 pcf (assumes aggregate backfill) and the coefficient of friction between the vault backfill and the vault walls may be taken as 0.35 (assumes aggregate backfill). The minimum factor of safety against buoyant uplift should be 1.5.

3. For the manhole/flow control structure (about 5 to 6 feet shallower than the bottom of wet well excavation:

   a. At 5 to 6 feet above the bottom of the wet well excavation the manhole/flow control structure will be directly underlain by loose to medium dense Sand (SW-SM) (see B-6 in the GDR). The manhole/flow control structure must be underlain by a minimum of 6 inches of Class 2 aggregate base rock which is in turn underlain by a minimum of 12 inches of foundation rock (¾-inch by 1½-inch crushed rock) wrapped in non-woven geotextile filter fabric. Foundation rock to be compacted in place buy a minimum of 3 passes of a vibra-plate compactor. Class 2 aggregate base rock to be compacted to a minimum of 95% relative compaction.

   b. Allowable manhole/flow control structure bearing pressure (DL + LL) = 1,400 psf with a one-third increase for seismic loads.

   c. Modulus of subgrade reaction (k) = 25 tcf. Modify for manhole/flow control structure size per note 1.c.

   d. Poisson's ratio = 0.50.

   e. Young's modulus = 600,000 psf.

   f. Applied static lateral earth pressure on the manhole/flow control structure walls, use at-rest earth pressure plus hydrostatic pressure = 95 pcf triangular distribution.

   g. Applied surcharge loading = 240 psf rectangular loading from the ground surface to 10 feet deep and 100 psf from 10 to 20 feet deep.

h. Applied dynamic earth pressure (seismic loading) = 20 x H psf rectangular loading where H = manhole/flow control structure depth. Apply resultant between 0.5 and 0.6H up from the base of the manhole/flow control structure.

i. Seismic design, site classification = Site Class D.

j. Ultimate passive earth pressure = 150 pcf triangular loading.

k. Ultimate coefficient of base friction = 0.30.

l. For manhole/flow control structure buoyancy, assume that groundwater is at the ground surface. To resist buoyancy, the buoyant unit weigh of the manhole/flow control structure backfill above a foundation lip may be taken as 80 pcf (assumes aggregate backfill) and the coefficient of friction between the manhole/flow control structure backfill and manhole/flow control structure walls may be taken as 0.35 (assumes aggregate backfill). The minimum factor of safety against buoyant uplift should be 1.5.

2.3.2.2. PS 2 – Redwood City Pump Station

1. For mat foundations at the ground surface (i.e. fuel storage pad, chemical storage pad, electric transformer pad, surge control tank):

    a. Surficial soils consist of about 5.5 feet of areal fill composed of medium stiff to loose Lean to Fat Clay (CL/CH) and Clayey Sand (SC) (see B-2 in the GDR). All mat foundations at the ground surface must be underlain by a minimum of 18 inches of Class 2 aggregate base rock compacted to a minimum of 95% relative compaction. The Class 2 aggregate base rock to extend a minimum of 2 feet beyond the perimeter of the mat.

    b. Allowable mat bearing pressure (DL + LL) = 1,000 psf with a one-third increase for transient wind and seismic loads.

    c. Modulus of subgrade reaction (k) = 50 tcf. This k value is for a 1’ x 1’ steel plate and must be modified for mat size (e.g. see “Foundation Size Effect on Modulus of Subgrade Reaction in Clay Soils” by Moayed and Janbez).

    d. Poisson’s Ratio = 0.40

    e. Young’s Modulus = 600,000 psf.

    f. Ultimate coefficient of base friction = 0.30.

    g. Seismic design, Site Classification = Site Class D.

2. For the valve vault and flow meter structures (about 10 to 12 feet deep):

a. At 10 to 12 feet deep the valve vault and flow meter vault will be directly underlain by stiff Fat Clay (CH) (see B-2 in GDR). The vaults must be underlain by a minimum of 6 inches of Class 2 aggregate base rock which is in turn underlain by a minimum of 12 inches of foundation rock (¾-inch by 1½-inch crushed rock) wrapped with non-woven geotextile filter fabric. Foundation rock to be compacted in place by a minimum of 3 passes of a vibra-plate compactor. Class 2 aggregate base rock to be compacted to 95% relative compaction.

b. Allowable vault bearing pressure (DL + LL) = 800 psf with a one-third increase for seismic loads.

c. Modulus of subgrade reaction (k) = 75 tcf. Modify for vault size per note 1.c.

d. Poisson's ratio = 0.50.

e. Young's modulus = 900,000 psf.

f. Applied static lateral earth pressure on vault walls, use at-rest earth pressure plus hydrostatic pressure = 90 pcf triangular loading.

g. Applied surcharge loading = 240 psf rectangular loading from the ground surface to 10 feet deep and 100 psf from 10 to 20 feet deep.

h. Applied dynamic earth pressure (seismic loading) = 20 x H psf rectangular loading where H = vault depth. Apply resultant between 0.5 and 0.6H up from the base of the vault.

i. Seismic design, site classification = Site Class D.

j. Ultimate passive earth pressure = 200 pcf triangular loading.

k. Ultimate coefficient of base friction = 0.30.

l. For vault buoyancy, assume that groundwater is at the ground surface. To resist buoyancy, the buoyant weight of the vault backfill above a foundation lip may be taken as 80 pcf (assumes aggregate backfill) and the coefficient of friction between the vault backfill and the vault walls may be taken as 0.35 (assumes aggregate backfill). The minimum factor of safety against buoyant uplift should be 1.5.

3. For the manhole/flow control structure (about 5 to 6 feet shallower than the bottom of wet well excavation:

a. At 5 to 6 feet above the bottom of the wet well excavation the manhole/flow control structure will be directly underlain by stiff Clayey Sand to Sandy Fat Clay (SC/CH) (see B-2 in the GDR). The manhole/flow control structure must be underlain by a minimum of 6 inches of Class 2 aggregate base rock which is in turn underlain by a minimum of 12

inches of foundation rock (¾-inch by 1½-inch crushed rock) wrapped in non-woven geotextile filter fabric. Foundation rock to be compacted in place buy a minimum of 3 passes of a vibra-plate compactor. Class 2 aggregate base rock to be compacted to a minimum of 95% relative compaction.

b. Allowable manhole/flow control structure bearing pressure (DL + LL) = 1,700 psf with a one-third increase for seismic loads.

c. Modulus of subgrade reaction (k) = 75 tcf. Modify for manhole/flow control structure size per note 1.c.

d. Poisson's ratio = 0.50.

e. Young's modulus = 900,000 psf.

f. Applied static lateral earth pressure on the manhole/flow control structure walls, use at-rest earth pressure plus hydrostatic pressure = 90 pcf triangular distribution.

g. Applied surcharge loading = 240 psf from the ground surface to 10 feet deep and 100 psf from 10 to 20 feet deep.

h. Applied dynamic earth pressure (seismic loading) = 20 x H psf rectangular loading where H = manhole/flow control structure depth. Apply resultant between 0.5 and 0.6H up from the base of the manhole/flow control structure.

i. Seismic design, Site Classification = Site Class D.

j. Ultimate passive earth pressure = 200 pcf triangular loading.

k. Ultimate coefficient of base friction = 0.40.

l. For manhole/flow control structure buoyancy, assume that groundwater is at the ground surface. To resist buoyancy, the buoyant unit weigh of the manhole/flow control structure backfill above a foundation lip may be taken as 80 pcf (assumes aggregate backfill) and the coefficient of friction between the manhole/flow control structure backfill and manhole/flow control structure walls may be taken as 0.35 (assumes aggregate backfill). The minimum factor of safety against buoyant uplift should be 1.5.

2.3.2.3. PS 3 – San Carlos Pump Station

1. For mat foundations at the ground surface (i.e. fuel storage pad, chemical storage pad, electric transformer pad, surge control tank):

   a. Surficial soils consist of about 7.5 feet of areal fill composed of Clayey Sand (SC) to Sandy Lean Clay (CL). The areal fill is underlain by about 9 feet of soft Young Bay Mud.

(See B-1 in the GDR.) All mat foundations at the ground surface must be underlain by a minimum of 18 inches of Class 2 aggregate base rock compacted to a minimum of 95% relative compaction. The Class 2 aggregate base rock to extend a minimum of 2 feet beyond the perimeter of the mat.

b. Allowable mat bearing pressure (DL + LL) = 500 psf with a one-third increase for transient wind and seismic loads.

c. Modulus of subgrade reaction (k) = 50 tcf. This k value is for a 1' x 1' steel plate and must be modified for mat size (e.g. see "Foundation Size Effect on Modulus of Subgrade Reaction in Clay Soils" by Moayed and Janbez).

d. Poisson's Ratio = 0.40.

e. Young's Modulus = 600,000 psf.

f. Ultimate coefficient of base friction = 0.30.

g. Seismic design, Site Classification = Site Class D (the soft Young Bay Mud is less than 10 feet thick).

2. For the valve vault and flow meter structures (about 10 to 12 feet deep):

a. At 10 to 12 feet deep the valve vault and flow meter vault will be directly underlain by soft Young Bay Mud (OH) (see B-1 in GDR). The vaults must be underlain by a minimum of 6 inches of Class 2 aggregate base rock which is in turn underlain by a minimum of 24 inches of foundation rock (¾-inch by 1½-inch crushed rock) wrapped with non-woven geotextile filter fabric. Foundation rock to be compacted in place by a minimum of 3 passes of a vibra-plate compactor in 12-inch lifts. Class 2 aggregate base rock to be compacted to a minimum of 95% relative compaction. Backfill around the valve vault and flow meter structure should consist of lightweight aggregate with a maximum saturated surface dry unit weight of 60 pcf. As an alternative to lightweight backfill, all YBM should be removed from below the structure and backfilled with foundation rock wrapped in nonwoven geotextile fabric.

b. Allowable vault bearing pressure (DL + LL) = 500 psf with a one-third increase for seismic loads.

c. Modulus of subgrade reaction (k) = 25 tcf. Modify for vault size per note 1.c.

d. Poisson's ratio = 0.50

e. Young's Modulus = 400,000 psf.

f. Applied static lateral earth pressure on vault walls, use at-rest earth pressure plus hydrostatic pressure = 105 pcf triangular loading.

g. Applied surcharge loading = 240 psf rectangular loading from the ground surface to 10 feet deep and 100 psf from 10 to 20 feet deep.

h. Applied dynamic earth pressure (seismic loading) = 20 x H psf rectangular loading where H = vault depth. Apply resultant between 0.5 and 0.6H up from the base of the vault.

i. Seismic design, Site Classification = Site Class D (the soft Young Bay Mud is less than 10 feet thick).

j. Ultimate passive earth pressure = 100 pcf triangular loading.

k. Ultimate coefficient of base friction = 0.20.

l. For vault buoyancy, assume that groundwater is at the ground surface. To resist buoyancy, the buoyant weight of the vault backfill (assuming lightweight backfill) above a foundation lip should be taken as 0 pcf (i.e. no contribution from lightweight backfill weight) and the coefficient of friction between the vault backfill and the vault walls may be taken as 0.35 (assumes lightweight backfill). The minimum factor of safety against buoyant uplift should be 1.5.

3. For the manhole/flow control structure (about 5 to 6 feet shallower than the bottom of wet well excavation:

a. At 5 to 6 feet above the bottom of the wet well excavation the manhole/flow control structure will be directly underlain by stiff Fat Clay (CH) (see B-1 in the GDR). The manhole/flow control structure must be underlain by a minimum of 6 inches of Class 2 aggregate base rock which is in turn underlain by a minimum of 12 inches of foundation rock (¾-inch by 1½-inch crushed rock) wrapped in non-woven geotextile filter fabric. Foundation rock to be compacted in place buy a minimum of 3 passes of a vibra-plate compactor. Class 2 aggregate base rock to be compacted to a minimum of 95% relative compaction.

b. Allowable manhole/flow control structure bearing pressure (DL + LL) = 2,000 psf with a one-third increase for seismic loads.

c. Modulus of subgrade reaction (k) = 75 tcf. Modify for manhole/flow control structure size per note 1.c.

d. Poisson's ratio = 0.50.

e. Young's modulus = 900,000 psf.

f. Applied static lateral earth pressure on the manhole/flow control structure walls, use at-rest earth pressure plus hydrostatic pressure = 105 pcf triangular distribution.

g. Applied surcharge loading = 240 psf rectangular loading from the ground surface to 10 feet deep and 100 psf from 10 to 20 feet deep.

h. Applied dynamic earth pressure (seismic loading) = 20 x H psf rectangular loading where H = manhole/flow control structure depth. Apply resultant between 0.5 and 0.6H up from the base of the manhole/flow control structure.

i. Seismic design, Site Classification = Site Class D (the soft Young Bay Mud is less than 10 feet thick).

j. Ultimate passive earth pressure = 100 pcf triangular loading.

k. Ultimate coefficient of base friction = 0.30.

l. For manhole/flow control structure buoyancy, assume that groundwater is at the ground surface. To resist buoyancy, the buoyant unit weigh of the manhole/flow control structure backfill above a foundation lip may be taken as 80 pcf (assumes aggregate backfill) and the coefficient of friction between the manhole/flow control structure backfill and manhole/flow control structure walls may be taken as 0.35 (assumes aggregate backfill). The minimum factor of safety against buoyant uplift should be 1.5.

2.4. Pipelines

2.4.1. Pump Station Pipelines

Pump station pipelines will be founded at various elevations and will be underlain by a variety of soil conditions from fill to soft YBM to stiff Old Bay Clay. All pump station pipelines should be underlain by a minimum of 12 inches of foundation rock (¾-inch by 1½-inch crushed rock) wrapped in non-woven geotextile filter fabric. Foundation rock is to be compacted in place by a minimum of 3 passes of a vibra-plate compactor. Pipeline embedment material should extend from foundation rock to 12 inches over the top of pipeline. Pipe embedment material should consist of Class 2 aggregate base rock compacted to a minimum of 90% relative compaction. Trench backfill should also consist of Class 2 aggregate base rock compacted to 90% relative compaction except for PS3 (San Carlos) where shallow and intermediate depth pipelines (e.g., at valve vault and flow meter structures) will be underlain by YBM. At all locations where pipelines are underlain by YBM, trench backfill must consist of lightweight aggregate with a maximum saturated surface dry unit weight of 60 pcf. As an alternative to lightweight backfill, all YBM should be removed from below the pipeline and backfilled with foundation rock wrapped in nonwoven geotextile fabric.

All pump station pipelines should be designed to accommodate up to 1 inch of differential movement at the interface of the pump station structure and pipeline.

Draft GIR Note: This recommendation for pipeline flexibility at structure connections may be modified pending results of the liquefaction settlement analysis recommended in Section 2.6

Draft GIR Note: Additional recommendations for pipeline items such as external dead loads, live loads, E'c and thrust blocks, if needed, can be provided pending determination of pipe types. Also, will inlet/outlet force mains at the pump station structure interface include steel casings?

2.4.2. Belmont Gravity Sewer Pipeline

Based on geologic setting, experience in the project area and the pipe zone soils as described in the GDR, microtunnel pipe jacking is an appropriate and best trenchless method of installation for the Belmont Gravity Sewer. As discussed in Section 2.5, additional geotechnical information is needed for final microtunnel design and as a basis for contractor selection of project specific microtunneling means and methods (e.g., cutter face configuration, slurry pressures to counterbalance external hydrostatic groundwater pressure, front chamber soil cuttings pressure to counterbalance external earth pressures, slurry separation plant configuration, etc.).

2.5. Pavement

The asphalt pavement section at all pump stations should consist of a minimum of 3 inches of asphaltic concrete over 12 inches of Class 2 aggregate base rock. The pavement subgrade soil must be scarified to a depth of 8 inches, moisture conditioned to near optimum moisture content and compacted to a minimum of 95% relative compaction per ASTM D1557.

Asphalt pavement section replacement in City streets must match existing but in no case should be less than 3 inches of asphaltic concrete over 12 inches of aggregate base rock (compacted as described above).

2.6. Final Design

For final design of the three project pump stations, a minimum of two Cone Penetration Tests (CPT) to depths of 75 to 100 feet, or refusal, are recommended at each pump station site to generate a continuous soil profile and serve as the basis for liquefaction settlement analysis. (Recall loose sands encountered at B-5 and B-6 within the Old Bay Clay.) Pore pressure dissipation tests should be performed at all sand layers encountered to evaluate artesian groundwater pressures , if present. The CPT profile/data and seismic setting (i.e., site acceleration) can then be entered into the computer program LiquefyPro (or equivalent) to evaluate individual sand layers that are likely to liquefy and to estimate the resultant seismic settlement (if any) at the ground surface and at the base of the pump stations.

For final design of the Belmont Gravity Sewer, additional test borings must be drilled and sampled at all shaft locations and at mid-drive locations between shafts. Borings at shaft locations must be drilled to a minimum of 2 times shaft depth. Borings at mid-drive locations should be drilled to a minimum of 10 feet below pipeline invert. Of particular importance in this geologic setting is identification of any confined aquifers that could cause base failure of shaft excavations. In addition to final design test borings, the history of the pipeline alignment should be researched with respect to past land use and possible obstructions to microtunneling (e.g., pile foundation, tie-backs, steel well casing, etc.).

3.0 LIMITATIONS

This Technical Memorandum has been prepared for the exclusive use of Brown and Caldwell and SBSA for the Pump Station Predesign project as described herein. This Technical Memorandum may not be used for any other purpose or for any other project. Within the limitations of scope, schedule and budget, DCM Consulting, Inc.'s services have been provided in accordance with generally accepted practices in the field of geotechnical engineering for Geotechnical Report preparation in the San Francisco Bay Area at the time the investigation was completed. The conclusions and opinions presented in this Technical Memorandum are based on the author's professional knowledge, judgment and experience. No warranty or other conditions express or implied should be understood.

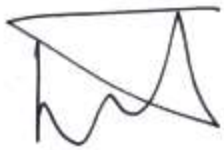

David C. Mathy
C.E. 28082
G.E. 569

Draft GIR Note: This Draft GIR will be finalized pending DCM Consulting's review of the 90% Predesign Plans (for consistency between the GIR and Predesign plans) and receipt of Brown and Caldwell's and SBSA's draft review comments.

This page intentionally left blank.

Appendix D: South Bayside System Authority Lift Station Soils Corrosivity Investigation

V&A Consulting Engineers, Inc., January 8, 2014

This page intentionally left blank.

South Bayside System Authority Lift Station Soils Corrosivity Investigation

Appendix Q

Prepared for: Charlie Joyce PE, Brown & Caldwell

Prepared by: Matt Snow, V&A
Brian Chapman, P.E., V&A

Reviewed by: Keith Packard, P.E., V&A
Glenn Willson, P.E., V&A

Date: January 8, 2014

These are Pump Stations, not lift station. Naming convention is PS1 for Menlo Park, PS2 for Redwood City, and PS3 for San Carlos/ Belmont

INTRODUCTION

V&A was retained by Brown & Caldwell to perform a soil corrosivity investigation and make recommendations for corrosion control of the buried metallic yard piping at three South Bayside System Authority lift stations. The three lift stations are referred to as the Menlo Park Lift Station, the Redwood City Lift Station, and the San Carlos Lift Station and are located in their respective cities. The objectives of the investigation were to:

1) Perform field soil resistivity testing
2) Review existing corrosion data
3) Perform chemical analysis of selected soil samples
4) Provide corrosion control recommendations for the buried yard piping and concrete structures at each pump station

Based on the average field soil resistivity data, the soil at all three lift stations is *highly corrosive* to buried metallic piping. Recommendations for corrosion control and design of a corrosion control system are presented at the end of this memorandum.

In-situ resistivity of the soil was measured at two locations at each lift station on October 17, 2013.

A vicinity map of the three lift stations is shown in Figure 1. A map of resistivity test locations and soil sample boring locations for each lift station is shown in Figures 2a through 2c.

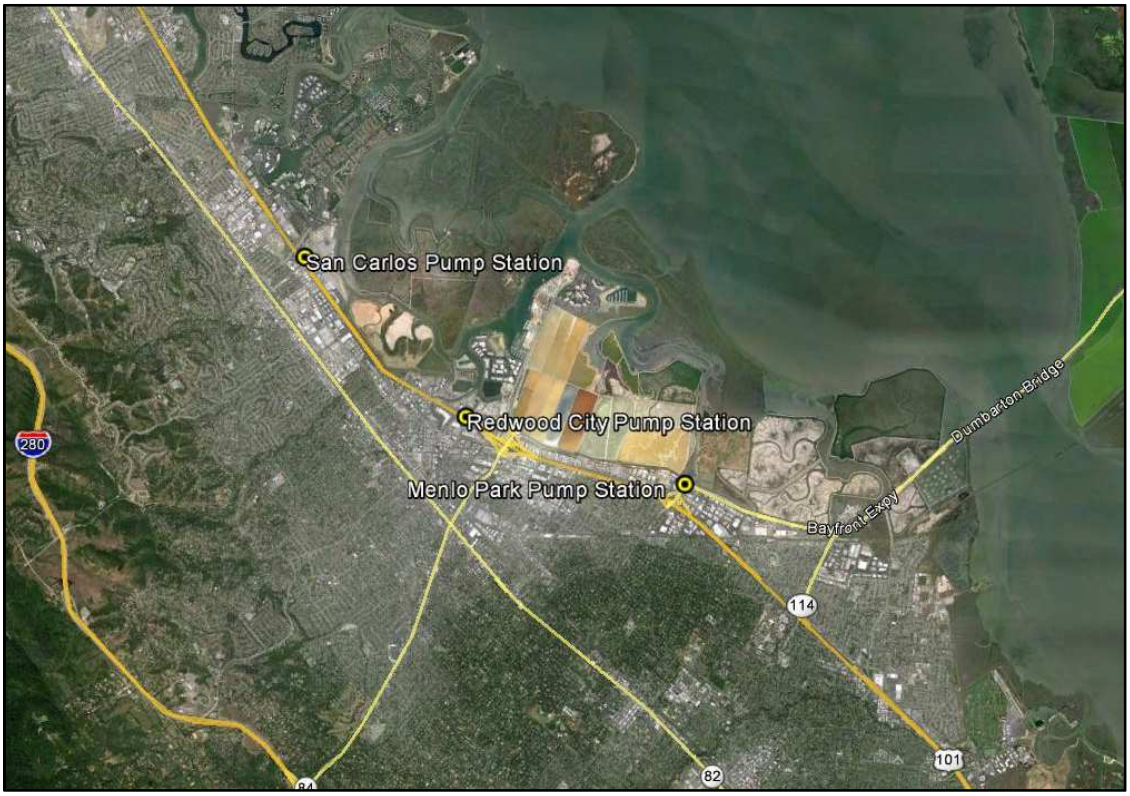

Figure 1. Project Vicinity Map

Figure 2a. Menlo Park Lift Station Resistivity Test Locations and Soil Sample Boring Locations

Figure 2b. Redwood City Lift Station Resistivity Test Locations and Soil Sample Boring Locations

Figure 2c. San Carlos Lift Station Resistivity Test Locations and Soil Sample Boring Locations

TEST METHODS

In attempting to predict corrosion problems associated with a particular type of structure prior to installation, it is necessary to investigate the soil conditions the structure will encounter. Since corrosion is an electrochemical process which is accompanied by current flow, the electrochemical characteristics of a soil are of primary importance when evaluating corrosivity. Test methods utilized during this investigation reflect the current practices for evaluating soil corrosivity.

Field Soil Resistivity Testing

Soil resistivity measurements were conducted by the Wenner 4-Electrode Method, utilizing a Digital Soil Resistance Meter, (Model 4610, manufactured by AEMC). The Wenner method involves the use of four steel pins driven into the ground along a straight line, equidistant from each other, as shown in Figure 3.

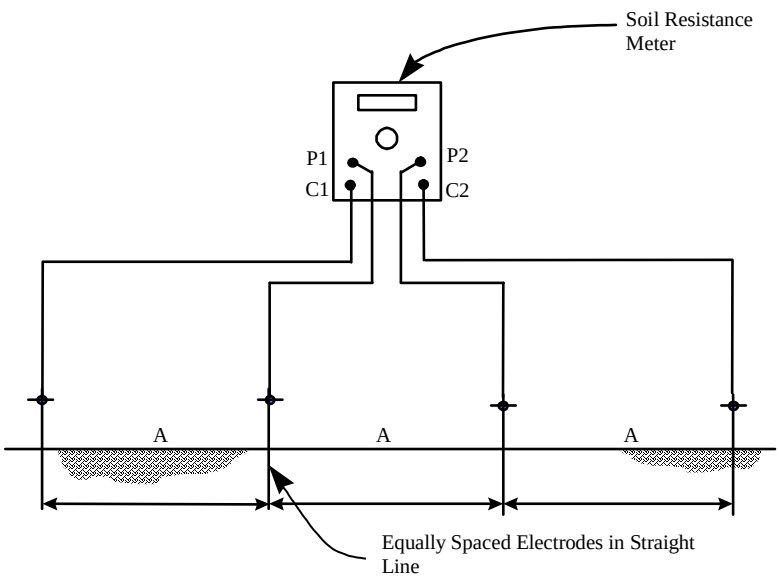

Figure 3. Soil Resistivity Measurement

An alternating current from the Soil Resistance Meter causes a current to flow through the soil between the outside probes, C1 and C2. Due to the resistance of the soil, the current creates a voltage gradient, which is proportional to the average resistance of the soil mass to a depth equal to the distance between probes. The voltage drop is then measured across pins, P1 and P2. Resistivity of the soil is then computed from the instrument reading according to the following formula:

$$\rho = 2 \cdot \pi \cdot A \cdot R$$

Where:	ρ	=	soil resistivity (ohm-cm)
	A	=	distance between electrodes (cm)
	R	=	soil resistance, instrument reading (ohms)
	π	=	3.14 (approx.)

Soil resistivity measurements were conducted at probe spacing of 2.5, 5, 7.5, 10, 15, and 20 feet. The resistivity values obtained represent the average resistivity of the soil to a depth equal to the pin spacing. The resistivity of each layer of soil was then calculated using the Barnes Layer Method as follows:

Barnes Layer Soil Resistivity Calculation

$$\rho_{b-a} = KR_{(b-a)}$$

and

$$\frac{1}{R_{b-a}} = \frac{1}{R_a} - \frac{1}{R_b}$$

Where:

ρ_{b-a}	=	Soil resistivity of layer depth b-a (ohm-cm)
a	=	Soil depth to top of layer (feet)
b	=	Soil depth to bottom of layer (feet)
R_a	=	Soil resistance read at depth a (ohms)
R_b	=	Soil resistance read at depth b (ohms)
R_{b-a}	=	Resistance of soil layer from a to b (ohms)
K	=	Layer constant (cm)
	=	60.96 π (b-a)

Laboratory Soil Resistivity Analysis

Soil resistivity data obtained from Jacobs Associates (File No. 4520.0, October, 2013) was used determine minimum, or saturated, soil resistivity using a soil box (see Figure 4). The testing was performed in accordance with Caltrans Test Method 643.

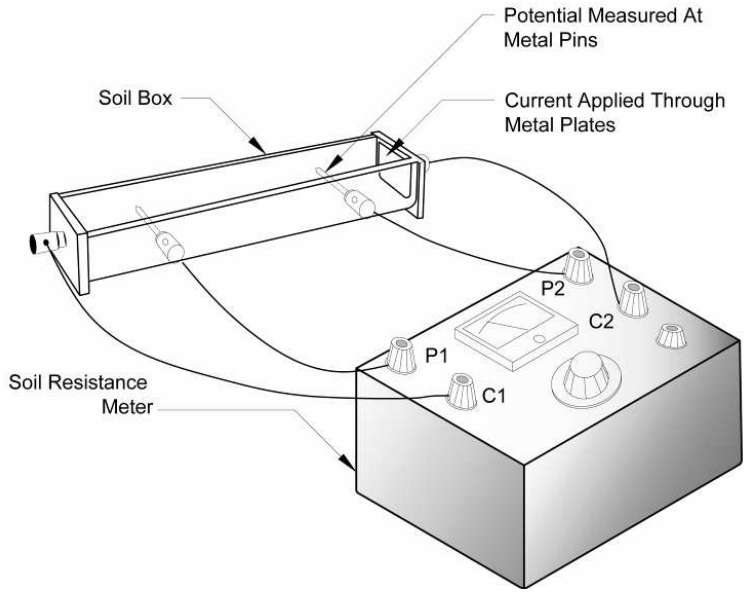

Figure 4. Soil Resistivity Measurement Using the Soil Box Method

This apparatus consists of a small plastic box with metal end plates, for passing current through the soil sample packed tightly into the box. Current is passed through the sample, causing a voltage drop across the sample. The soil resistivity was determined from this known voltage drop utilizing a Soil Resistance Meter, as described earlier.

Soil samples were placed in the soil box and the soil resistivity measured in the "as-received" state. Distilled water was added to the soil sample and the resistivity measured after each watering. As the soil sample became more saturated, the soil resistivity decreased until the minimum soil resistivity was reached.

Chemical Analysis of Soil

Soil chemical analysis data obtained from Jacobs Associates (File No. 4520.0, October, 2013) was used to assess soil corrosivity. This data included pH as well as concentrations of water soluble chloride and water soluble sulfate ions. Standard analytical methods were utilized for determination of these chemical constituents.

TEST RESULTS

Data obtained during this investigation has been summarized in tabular form for analysis and presentation. Table 1 summarizes the results of the Wenner 4-Pin field soil resistivity measurements at all three lift stations. Table 2 lists the minimum (saturated) soil resistivity for each soil sample collected as well as the chemical analysis of each sample.

Table 1. Summary of Field Soil Resistivity Data

Pump Station	Test Number	Depth (feet)	Layer (feet)	Layer Resistivity (Ohm-cm)	Corrosivity of Layer
PS 1 – Menlo Park	Test 1 (Just outside the Menlo Park PS)	2.5	0 - 2.5	3,567	Mild
		5	2.5 - 5	1,336	Moderate
		7.5	5 - 7.5	545	High
		10	7.5 - 10	374	Very High
		15	10 - 15	309	Very High
		20	15 - 20	450	Very High
	Test 2 (Perpendicular to Test 1)	2.5	0 - 2.5	5,372	Mild
		5	2.5 - 5	867	High
		7.5	5 - 7.5	542	High
		10	7.5 - 10	466	Very High
		15	10 - 15	349	Very High
		20	15 - 20	371	Very High
PS 2 – Redwood City	Test 3 (Just outside the Redwood City PS)	2.5	0 - 2.5	3,974	Mild
		5	2.5 - 5	1,607	Moderate
		7.5	5 - 7.5	393	Very High
		10	7.5 - 10	509	High
		15	10 - 15	391	Very High
		20	15 - 20	863	High
	Test 4 (Perpendicular to Test 3)	2.5	0 - 2.5	3,825	Mild
		5	2.5 - 5	1,303	Moderate
		7.5	5 - 7.5	496	Very High
		10	7.5 - 10	196	Very High
		15	10 - 15	476	Very High
		20	15 - 20	109	Very High
PS 3 – San Carlos	Test 5 (Inside San Carlos PS gate)	2.5	0 - 2.5	1,771	Moderate
		5	2.5 - 5	1,148	Moderate
		7.5	5 - 7.5	623	High
		10	7.5 - 10	689	High
		15	10 - 15	383	Very High
		20	15 - 20	377	Very High
	Test 6 (Just outside the San Carlos PS, Perpendicular to Test 5)	2.5	0 - 2.5	1,714	Moderate
		5	2.5 - 5	1,697	Moderate
		7.5	5 - 7.5	121	Very High
		10	7.5 - 10	284	Very High
		15	10 - 15	246	Very High
		20	15 - 20	140	Very High

Table 2. Summary of Laboratory Soil Analysis Data

Site	Sample	Depth (feet)	Saturated Resistivity (ohm-cm)	pH	Sulfate Ions (ppm)	Chloride Ions (ppm)
San Carlos	B-1-3	8	84	7.2	340	2700
Redwood City	B-2-3	12	1200	9.1	130	320
Menlo Park	B-6-2b	8	540	9.1	100	68

Soil Resistivity

Understanding how easily current will travel through a medium surrounding a metallic object is important in evaluating the corrosive environment. Resistivity is an inverse measure of the ability of a soil to conduct an electric current, with higher resistivity resulting in a lesser degree of current flow. Corrosion rate depends on current flow between a metal and the adjacent medium. Normally, the corrosion activity on metals in soil increases as soil resistivity decreases. The following table correlates resistivity values with degree of corrosivity. The interpretation of corrosivity correlation to soil resistivity varies somewhat among corrosion engineers. However, Table 3 is a generally accepted guide.

Table 3. Effect of Soil Resistivity on the Corrosivity of Soil [1]

Soil Resistivity (ohm-cm)	Degree of Corrosivity
< 500	Very High
500 – 1,000	High
1,000 – 2,000	Moderate
2,000 – 10,000	Mild
> 10,000	Negligible

Metallic structures will be installed at all three lift stations at various depths. Most of these structures will be installed between 5 and 20 feet deep.

Menlo Park Lift Station

Soil resistivity at a depth of 5 to 20 feet ranges from 309 ohm-cm to 545 ohm-cm. The saturated soil resistivity of the sample was 540 ohm-cm. These soils are considered *highly corrosive* to *very highly corrosive* to steel.

1 Peabody, A. and Parker, M., "Corrosion Basics, an Introduction", Ed. by Brasunas, A., NACE International, p. 191 (1984)

Redwood City Lift Station

Soil resistivity at a depth of 5 to 20 feet ranges from 109 ohm-cm to 863 ohm-cm. The saturated soil resistivity of the sample was 1,200 ohm-cm. These soils are considered *moderately corrosive* to *very highly corrosive* to steel.

San Carlos Lift Station

Soil resistivity at a depth of 5 to 20 feet ranges from 121 ohm-cm to 689 ohm-cm. The saturated soil resistivity of the sample was 84 ohm-cm. The soil at all three lift stations is considered *highly corrosive* to *very highly corrosive* to steel.

Overall the soils at all three lift stations are considered *very highly corrosive* to steel.

Soil Chemical Analysis

A wide variety of water-soluble salts is typically found in soils. Two soils having the same resistivity may have significantly different corrosion characteristics, depending on the specific ions available. The major constituents which accelerate corrosion are chlorides, sulfates and the acidity (pH) of the soil. Chloride ions tend to break down otherwise protective surface deposits, and can facilitate corrosion of reinforcing steel in concrete structures. Sulfates in soil can be highly aggressive to portland cement by combining chemically with certain constituents of the concrete, principally tricalcium aluminate. This reaction is accompanied by expansion and eventual disruption of the concrete matrix.

Water-soluble Chloride

Chloride ions found in soils tend to break down otherwise protective surface deposits, and can result in corrosion of buried metallic structures and reinforcing steel in concrete structures. Table 4 shows the effect of chloride ions on the corrosivity of the soil.

Table 4. Effects of Chloride Ions on the Corrosivity of Soil

Water-soluble Chloride Concentration (ppm)	Degree of Corrosivity
Over 5,000	Very High
1,500 - 5,000	High
500 - 1,500	Moderate
100 - 500	Mild
Below 100	Negligible

The water soluble chloride level of the soil sample obtained from the San Carlos Pump Station is 2,700 ppm; this soil sample is considered *highly corrosive*. The water soluble chloride level of the soil sample obtained from the Redwood City Pump Station is 320 ppm; this soil sample is considered *mildly corrosive*. The water soluble chloride level of the soil sample obtained from the Menlo Park Pump Station is 68 ppm; this soil sample is considered *negligibly corrosive*.

V&A's experience with soils in the general vicinity of these Lift Stations (east of Hwy 101) are that bay mud which is high in chlorides is present and the soils are very corrosive to buried steel and reinforced concrete. The soils at all three Lift Stations should be classified as *very highly corrosive* to buried steel and reinforced concrete structures.

Acidity

Acidity, as indicated by the pH value, is another important factor of soil with respect to corrosivity. Lower pH (more acidic) will result in a greater degree of corrosivity with respect to buried metallic and concrete structures. When pH increases above 7.0 (the neutral value) the conditions become increasingly more alkaline. In alkaline environments, steel forms a protective layer on its surface. This is referred to as passivation. V&A developed Table 5, which correlates the effect of pH on the rate of corrosion for buried steel or concrete structures.

Table 5. Effects of pH on the Corrosivity of Soil[2, 3]

pH	Corrosivity
< 5.5	High
5.5 - 6.5	Moderate
6.5 - 7.5	Neutral
> 7.5	Negligible

The pH of the tested soil sample from the San Carlos Pump Station is 7.2; this soil sample is considered *neutrally corrosive.* The pH of the tested soil samples from the Redwood City Pump Station and the Menlo Park Pump Station is 9.1; the soil pH of these soil samples is considered to have a *negligible effect on the corrosivity of the soil*.

2 Romanoff, M., "Underground Corrosion", NACE International, p. 8 (1989)

3 Uhlig H., "Corrosion and Corrosion Control", 2nd Edition, John Wiley & Sons Inc., pp.98-106 (1971); V&A's experience

Water-soluble Sulfates

Soil with high levels of sulfates can chemically attack concrete structures. Table 6 correlates the effect of sulfates on the corrosivity of soil for concrete structures.

Table 6. Effects of Sulfate Ions on the Corrosivity of Soil [4]

Water-soluble Sulfate Concentration (ppm)	Corrosivity
> 2,000	Very High
1,000 - 2,000	Moderate
< 1,000	Negligible

The water soluble sulfate level of the soil sample obtained from the San Carlos Pump Station is 340 ppm. The water soluble sulfate level of the soil sample obtained from the Redwood City Pump Station is 130 ppm. The water soluble sulfate level of the soil sample obtained from the Menlo Park Pump Station is 100 ppm. All three soil samples are considered *negligibly corrosive* to reinforced concrete structures with respect to sulfate ion concentration.

4 V&A's interpretation of Table 8.22.2, Bridge Design Specifications, California Department of Transportation (2000)

CONCLUSIONS

The soils at all three Lift Stations are located in an area known to be high in chlorides. The area east of Highway 101 is located on land reclaimed from the bay and contains bay mud and salty soils. The soil analysis confirmed that the soils at all three sites are highly corrosive to both buried steel and reinforced concrete and contain high levels of chlorides.

RECOMMENDATIONS

Buried Metallic Pipes

It is recommended that the following corrosion control measures be taken for buried metallic structures:

- Apply a bonded dielectric coating to the pipe
- Electrically isolate the piping from other metallic structures such as other metallic pipes, reinforced concrete, or where a change in piping or coating material occurs
- Install cathodic protection
- Bond all non-welded, non-insulating pipe joints for electrical continuity of the buried piping

The following coatings are recommended for buried applications:

- 100% Solids Polyurethane
- Fusion Bonded Epoxy
- Tape Wrap conforming to Standard AWWA C209

Cement Mortar Coated Pipelines

Cement mortar coated pipelines obtain their corrosion protection from the passivation effect that the high pH mortar has on the steel. It is therefore critical that all electrically connected steel be mortar coated to maintain an environment similar to that of the pipeline. In environments with high concentrations of chlorides, the passivation effect from the high pH of the mortar coating may not be sufficient to prevent corrosion. It is therefore it is recommended that cathodic protection be provided for mortar coated pipelines.

It is recommended that the following corrosion control measures be taken for cement mortar coated pipelines:

- The joints, valves, and any other steel appurtenances in metallic contact with the pipe shell or steel reinforcement should be coated with a cementitious mortar to maintain an environment similar to that of the pipe. Mortar coating can be performed by grouting the joints with a diaper, backfilling with a controlled low strength material (CLSM) (pH > 10), or applying a cementitious mortar to the surfaces.

- Field applied mortar used to coat the exposed steel should have a minimum cover of 2 inches and be prepared and applied per the manufacturer's directions.
- Electrically isolate the yard piping from other metallic structures such as other metallic pipes, reinforced concrete, or where a change in piping or coating material occurs.
- Install cathodic protection.
- Bond all non-welded, non-insulating pipe joints for electrical continuity of the buried piping.

Concrete and Reinforced Concrete Structures

The soils are corrosive towards reinforced concrete structures. Buried concrete structures should be constructed using the following recommendations:

- Cast-in-place concrete structures should have a minimum cover of 3 inches.
- Precast piles should have a minimum cover of 2.
- Water-to-cement ratio should not exceed 0.4.
- A corrosion inhibitor such as Grace DCI should be used.
- Concrete should be durable concrete such as described in ACI Standards 201.2R and 222R.
- Sand and water used in concrete mixtures should contain a maximum of 100 ppm of water-soluble chloride ions and water-soluble sulfate ions and have a pH in the range of 6.5 to 8.0.
- Water used in concrete mixtures should be potable water.

This page intentionally left blank.

Appendix E: TM 8.1 Design Criteria, Guidelines, and Standards

Brown and Caldwell, January 12, 2015

This page intentionally left blank.

TM 8.1 – Predesign vs. Proposed Project Summary

The following major changes between pre-design of the conveyance pump station completed in 2015 and conceptual design completed in 2016 as directly applied to TM 8.1 are summarized below.

Table E-1. TM 8.1 summary of changes

Section	Pre-Design	Proposed Project Selection
Background	• BPS and SCPS combined into one pump station, routing the BPS flows to the SCPS via gravity sewer main. • Three future pump stations will be constructed: (1) PS1, currently MPPS; (2) PS2, current RCPS and PS3 (the combined BPS and SCPS).	• BPS flows routed to SCPS via a rehabilitated force main for combination with San Carlos flows prior to discharge into the San Carlos Drop Shaft and gravity pipeline. • A single new pump station will be built at RCPS. MPPS will be rehabilitated. BPS will be rehabilitated. SCPS will be repurposed into odor control facilities for the gravity pipeline. • References to PS1, PS2 and PS3 are no longer used. Pump stations will be referred to as their existing names (e.g. MPPS, RCPS, SCPS and BPS).
Section 1: Pumps	• Dry weather and wet weather operating conditions were based on the conveyance system comprised of force main to the WWTP. • Each of the three pump stations will have a dedicated set of wet weather and dry weather pumps.	• Dry weather and wet weather operating conditions are based on the conveyance system comprised of gravity pipeline from the Inner Bair Island Drop Shaft. Updated operating conditions are presented in Sections 4 and 5 of the planning report. • BPS and MPPS may or may not have dedicated sets of wet dry weather and wet weather pumps due to the space limitations at the existing pump stations. RCPS will have a dedicated set of wet weather and dry weather pumps.
Section 2: Wet Well Design	• All pump stations will consist of two trench-style wet wells with variable speed pumps. • Each wet well will contain two dry weather pumps and two wet weather pumps.	• RCPS will be the only pump station that will include two trench-style wet wells with variable speed pumps. Each RCPS wet well will contain two dry weather pumps and two wet weather pumps. • MPPS will consist of two existing wet wells with five of the same sized, variable speed pumps. One wet well include two pumps and the second wet well will include three pumps. MPPS's existing wet wells will not accommodate conversion into trench-style wet wells. • BPS will consist of a single, existing wet well with three variable speed pumps. BPS's existing wet wells will not accommodate conversion into a trench-style wet well. • Modifications to improve the hydraulics of the approach channels/pipes and wet well will be evaluated for MPPS and BPS.

Table E-1. TM 8.1 summary of changes

Section	Pre-Design	Proposed Project Selection
Section 3: Hydraulic Transient Control	• Hydraulic transient control and analysis was completed for force main conveyance to the WWTP. • Hydropneumatic tanks are recommended at RCPS and SCPS.	• Hydraulic transient control and analysis was not completed for the gravity pipeline conveyance to the WWTP. This will be completed in pre-design and/or detailed design.
Section 4: Odor Control	• Chemical scrubbers recommended at MPPS, RCPS and SCPS.	• MPPS and RCPS will have chemical scrubbers for odor control. Design and size to be confirmed. • BPS will include an activated carbon system for odor control. • SCPS odor control system will include chemical scrubbers sized to treat foul air from the gravity tunnel.
Section 5: Bar Screens	• Bar screens recommended at RCPS with no screening or primary treatment located at BPS and SCPS.	• Bar screens are still recommended at RCPS due to volume of rags in influent based on location downstream of jail facilities. • Grinders are recommended at MPPS and BPS.

201 North Civic Drive, Suite 115
Walnut Creek, CA 94596

T: 925.937.9010
F: 925.937.9026

Technical Memorandum

DRAFT

Prepared for: Silicon Valley Clean Water

Project Title: Pump Station Predesign

Project No.: 142399

Technical Memorandum 8.1

Subject: Design Criteria, Guidelines, and Standards

Date: January 12, 2015

To: Bill Bryan, Project Manager, Silicon Valley Clean Water

From: Charles Joyce, P.E., Project Manager, Brown and Caldwell

Prepared by: _____
Alexandra F. M. Park, P.E., Project Engineer
California License No. C 64117

Reviewed by: _____
Timothy R. Banyai, P.E., Project Engineer
California License No. C 60715
Engineer in Responsible Charge

_____
Grace Chow, P.E., Quality Control
California License No. C 31554

Table of Contents

List of Figures

List of Tables

Attachment Table of Contents

List of Tables

List of Abbreviations

ABMA	American Bearing Manufacturers Association
AHJ	Authority Having Jurisdiction
AIC	available interrupting circuit
AISC	American Institute of Steel Construction
AISI	American Iron and Steel Institute
amsl	above mean sea level
AMWA	Association of Metropolitan Water Agencies
ANSI	American National Standards Institute
ASCE/SEI	American Society of Civil Engineers
ASHRAE	Air Conditioning Engineers
ASME B&PV	American Society of Mechanical Engineers, Boiler and Pressure Vessel
ASTM	American Society for Testing and Materials
ATS	Automatic Transfer Switch
AWWA	American Water Works Association
BC	Brown and Caldwell
BEPQ	Best Efficiency Flow
BGS	below ground surface
BPS	Conveyance System Master Plan CSMP) Belmont Pump Station
CBC	California Building Standards Code
CEC	California Electrical Code
CEC	California Energy Code
CMC	California Mechanical Code
CPU's	central processing units
DLR	Device Level Ring
DPS	Design Production Standard
EJMA	Expansion Joint Manufacturers Association
EJMA	Expansion Joint Manufacturers Association, Inc.
EMT	Electrical Metallic Tubing
ERVSS	Electronic Reduced Voltage Soft-Starter
FC	Foot Candles
FEF	Flow Equalization Facility
FRP	Fiberglass reinforced plastic
FT	feet
FVNR	Full Voltage Non-Reversing Motor Starters
GIR	Geotechnical Interpretive Report
GPD	gallons per day
GPH	gallons per hour

GPM	gallons per minute
HIM	human interface module
HP	horsepower
HSS	Hollow Structural Sections
HVAC	Heating, ventilating, and air conditioning
I/O	input/output
ICEA	Insulated Cable Engineers Association
IEEE	Institute of Electrical and Electron Engineers Association
IPCEA	Insulated Power Cable Engineers Association
ISA	Instrument Society of America
kVA	kilovolt-amps
kW	kilowatts
LEED	Leadership in Energy and Environmental Design
LEL	lower explosive limit
LF	linear feet
LOS	Lock-Out-Stop
MCBS	mechanically cleaned bar screens
MCC	Motor Control Center
MFMA	Metal Framing Manufacturers Association
MGD	million gallons per day
MOP	Manual of Practice
MOVs	metal oxide varistors
MPPS	Menlo Park Pump Station
MSS	Manufacturers Standardization Society of the Valve and Fittings Industry
NCS	National CAD Standards
NEC	National Electrical Code
NEMA	National Electrical Manufacturers Association
NETA	InterNational Electrical Testing Association
NFPA	National Fire Protection Association
NPSH3	Net Positive Suction Head Required - 3 Percent Reduction
NPSHA	Net Positive Suction Head Available
OSHA	U.S. Department of Labor Occupational Safety and Health Act
P&IDs	process and instrumentation diagrams
PACL	Pump Application Capacity Limits
PCC	Point of Common Coupling
pcf	per cubic foot
PIPESPEC	piping specification sheets
PLCs	Programmable Logic Controllers
PS1	Menlo Park S.D. Pump Station
PS1	Pump Station 1
PS2	Redwood City Pump Station

PS3	San Carlos Pump Station
PSF	per square foot
PWWF	Peak Wet Weather Flow
RAC	Rigid Aluminum Conduit
RAS-PVC	Rigid Aluminum Conduit, Polyvinyl coated
RCPS	Redwood City Pump Station
RIO	Remote I/O
RTP	reinforced thermoset polyester
RVSS	Reduced Voltage Solid State
SARA	Superfund Amendments and Reauthorization Act of 1986
SCADA	supervisory control and data acquisition
SCAQMD	South Coast Air Quality Management District
SCPS	San Carlos PS
SMACNA	Sheet Metal and Air Conditioner Contractor's National Association
SVCW	formerly SBSA Silicon Valley Clean Water
TM	technical memoranda
TSDF	transporter treatment, storage and/or disposal facility
UL	Underwriters Laboratories Inc.
UPS	Uninterruptable Power Supply
UV	ultra-violet
VFDs	variable frequency drives
WWTP	wastewater treatment plant

Introduction

This Technical Memorandum 8.1 (TM 8.1) describes the criteria, guidelines, and standards intended for the Silicon Valley Clean Water (SVCW) conveyance system pumping stations.

Background

In December 2011, SVCW (formerly SBSA) authorized Brown and Caldwell (BC) to prepare a Predesign Report for the Conveyance System Pump Stations (Predesign Report). The scope of work was based on building upon the Conveyance System Master Plan (CSMP), which was completed in August 2011. Four pump stations were evaluated: Belmont Pump Station (BPS), San Carlos PS (SCPS), Redwood City Pump Station (RCPS), and Menlo Park Pump Station (MPPS). The use of booster pump stations was also evaluated. Based on the hydraulic analysis and cost/benefit analysis the following decisions were made:

- BPS and SCPS should be combined into one pump station, routing the BPS flows to the SCPS via gravity sewer main;
- No new booster pump station will be constructed

SVCW Member Agencies provided new peak flow rates for the pump station design storm for this analysis. The pump stations are designed to pump the peak design flow from the Member Agencies to the wastewater treatment plant (WWTP) and the future adjacent Flow Equalization Facility (FEF).

The three future pump stations are renamed as PS1 (currently MPPS), PS2 (currently RCPS), and PS3 (the combined BPS and SCPS).

Purpose

The purpose of this document is to guide the pump station final design teams and to ensure consistent quality and similar facilities for ease of operation and maintenance. This document is meant to be a working document for the design teams such that during the design, changes can be made based on design team review and consensus.

Federal, State and Local Regulations and Standards

The latest versions of regulations, standards, and codes referred to during development of and/or referenced in this TM will need to be confirmed during final design. The final design shall be updated to the latest versions of regulations, standards and codes such that the pump stations are in compliance with current requirements at the time of construction.

Document Contents

This document includes criteria and guidelines that have been identified during the pump station predesign project for the pumps, approach conditions and wet well design, hydraulic transient control, odor control, and bar screens.

There are several attached sections to this document that cover design standards for all three pump stations. For this draft, two of these attachments noted below are being prepared by sub-consultants and are not included in this draft. These attachments will be incorporated in a subsequent draft. The attachments include:

- Civil Design Criteria and Geotechnical Requirements (Attachment A)
- Security Criteria (Attachment B)
- Corrosion Control (Attachment C)

- Architectural Design (Attachment D) – to be included as part of final design
- Structural Design (Attachment E)
- Process and Instrumentation Diagram Requirements (Attachment F)
- Mechanical Design (Attachment G)
- Piping Specifications (Attachment H)
- HVAC Design (Attachment I)
- Electrical and Power (Attachment J)
- Instrumentation and Control (Attachment K)
- Noise Attenuation Requirements (Attachment L) – to be included as part of final design
- CADD Standards (Attachment M)
- Standard Details (Attachment N)

Additional Technical Documents

A series of technical memoranda (TM) and reports were written as part of the Predesign Report. Several of these TMs contain pertinent technical information that will be used during final design of the pump stations. These TMs and other documents are listed below:

- SBSA Conveyance System Master Plan, August 2011
- TM 3.1 – Field Investigation Summary (Contaminated Materials Survey)
- TM 3.2 - Hazardous Materials Study for MPPS and the proposed gravity sewer from BPS to SCPS
- Phase I Environmental Site Assessment report, completed by David J. Powers & Associates in January 2012 as part of the 48-inch Reliability Improvement Project, which covers the Redwood City and San Carlos PS sites
- TM 6.1 – Hydraulic Evaluation
- TM 6.2 – Transient Analysis
- SBSA Security Guidance Document, Draft October 2011
- Corrosion Control TM by V&A, Draft January 8, 2014
- SBSA Corrosion Control and Odor Master Plan, June 29, 2010
- Geotechnical Data Report by Jacobs Associates, October 22, 2013
- Geotechnical Report by DCM Consulting Inc., Draft November 25, 2013
- SVCW Hard Assets Standard Naming Convention (latest document available)
- SVCW Automation Standards (latest document available)
- TM 5.1 Control Narratives (includes P&IDs)
- SVCW CAD Standards

Section 1: Pumps

Each of the three SVCW pump stations shall have a dedicated set of wet weather and dry weather pumps. This section discusses the operating conditions for the pump stations.

There are three main operating condition points that shall be used for pump selection. These points are where the pump curves meet the system curve. A hydraulic model of the Conveyance System was developed in MWHSoft InfoWater. The results from the hydraulic model were used to produce the system curves for

each pump station. The model and system curves will need to be updated during the final design phase to determine the effects of each individual pump station on the overall conveyance system.

1.1 Operating Condition Point Definition

Operating Condition Points A, B, and C are defined below and a generic figure illustrates the points in Figure 1-1:

Operating Condition Point A is defined as the peak design flow per pump and the pressure required to pump the peak flow based on the intersection of the pump curve with three pumps operating and the corrected system curve. The corrected system curve accounts for static head.

Operating Condition Point B is defined as the flow for one pump operating and the pressure required to pump the flow based on the intersection of the pump curve with one pump operating and the corrected system curve.

Operating Condition Point C is defined as the flow for one pump operating at fifty percent speed and the pressure required to pump the flow based on the intersection of the pump curve and the corrected system curve.

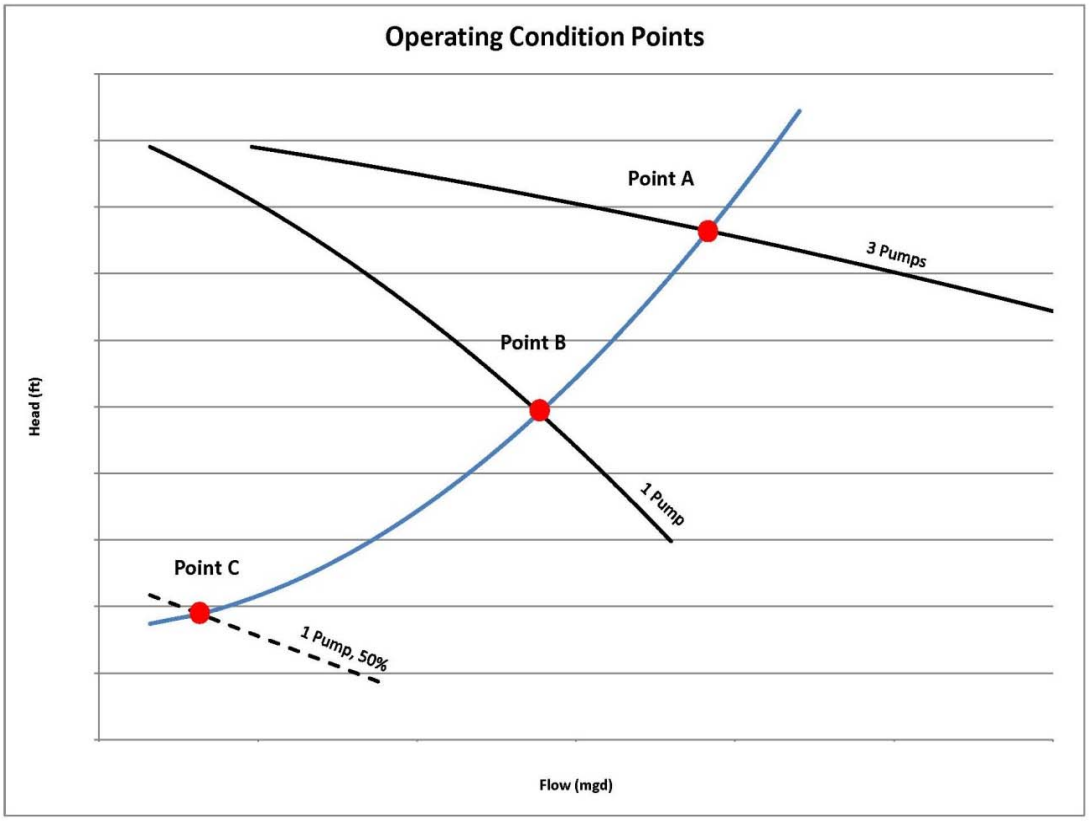

Figure 1-1. Operating Condition Points A, B, and C

1.2 Dry Weather Operating Conditions

Operating condition points A:

Table 1-1. Summary of Operating Condition Point A for Dry Weather Pumps at Pump Stations

Pump Station	Peak Dry Weather Flow Condition			
	Total Peak Dry Weather Flow at Pump Station (MGD)	Flow per Pump[1] (MGD)	Pressure at Peak Dry Weather (FT)	Pressure at Peak Dry Weather (psi)
PS3	9.0	3.0	42	18
PS2	14.5	4.8	49	21
PS1	10.0	3.3	56	24

[1]*Individual pump capacity is the pump station capacity divided by three.*

Operating condition points B:

Table 1-2. Summary of Operating Condition Points B for Dry Weather Pumps at Pump Stations

Pump Station	Peak Dry Weather Flow Condition			
	Total Peak Dry Weather Flow at Pump Station (MGD)	Flow per Pump (MGD)	Pressure at Peak Dry Weather (FT)	Pressure at Peak Dry Weather (psi)
PS3	3.5	-	38	17
PS2	6.5	-	36	16
PS1	5.5	-	37	16

No peak dry weather conditions are available for operation condition C.

Operating condition points B and C are as defined above in Section 1.1.

1.3 Wet Weather Operating Conditions

Operating condition points A:

Table 1-4. Summary of Operating Condition Point A for Wet Weather Pumps at Pump Stations

Pump Station	Peak Wet Weather Flow Condition			
	Total Peak Wet Weather Flow at Pump Station (MGD)	Flow per Pump[1] (MGD)	Pressure at Peak Wet Weather (FT)	Pressure at Peak Wet Weather (psi)
PS3	42.9	14.3	88	38
PS2	38	12.7	151	65
PS1	22	11	183	79

[1]*Individual pump capacity is the pump station capacity divided by three for PS2 and PS3, and divided by 2 for PS1.*

Operating condition points B:

Table 1-5. Summary of Operating Condition Point B for Wet Weather Pumps at Pump Stations				
Pump Station	Peak Wet Weather Flow Condition			
	Total Peak Wet Weather Flow at Pump Station (MGD)	Flow per Pump (MGD)	Pressure at Peak Wet Weather (FT)	Pressure at Peak Wet Weather (psi)
PS3	25	-	55	24
PS2	28	-	100	43
PS1	18.7	-	127	55

Operating conditions points C:

Table 1-6. Summary of Operating Condition Point C for Wet Weather Pumps at Pump Stations				
Pump Station	Peak Wet Weather Flow Condition			
	Total Peak Wet Weather Flow at Pump Station (MGD)	Flow per Pump (MGD)	Pressure at Peak Wet Weather (FT)	Pressure at Peak Wet Weather (psi)
PS3	-	-	-	-
PS2	6.4	-	38	17
PS1	6.6	-	42	18

Operating condition points B and C are as defined above in Section 1.1.

1.4 Pump Operational Requirements

In addition to pumps being able to meet the head and flow requirements for each pump station, the pumps have operational criteria that need to be met as well. These criteria include the pump application capacity limits (PACL) and net positive suction head (NPSH) requirements. The operating conditions must also fall within the allowable operating range (AOR) per pump manufacturers' definition.

1.4.1 PACL

Pump selection for a given application shall be predicated on locating the specified most frequent operating condition(s) in the PACL. These points shall always include Condition Points A and B and additionally shall include any other Condition Points indicated as continuous duty conditions, or any additionally specified for inclusion in the PACL. Condition Point A shall be the pump's rated condition and shall be guaranteed to meet both specified head and flow within the limit established in ANSI/HI 14.6, acceptance grade 1U.

A given pump's PACL shall be determined as a percentage of Best Efficiency Flow (BEPQ) at the given speed, the pump's suction specific speed as determined in accordance with ANSI/HI 1.3, paragraph 1.3.2.2 and the relationships presented in the Table 1-7 below.

Table 1-7. Limiting Flow, Percent Best Efficiency Point Flow (BEPQ)[1]		
Suction Specific Speed, less than but not greater than:	Solids Bearing Liquids Pumps, minimum limit (Percent)	Solids Bearing Liquids Pumps, maximum limit (Percent)
7000	70	125
8000	75	122
9000	80	120
10000	83	117
11000	85	112
12000	88	110
13000	91	110

[1]*Straight line interpolation may be used for intermediate values of suction specific speed*

Exceptions to the foregoing shall be considered only when certified test data demonstrating conclusively a wider region of stable pump performance can be provided. The test data shall include suction pressure pulse information as well as actual service information for the same impeller design and trim, operating at the same speed, capacities and head for the same size pump as required for the specified application.

Pumps shall function without loss of head due to cavitation or excessive vibration over the entire specified range of flow and head conditions defined by the region bounded by Condition Points A, B and C. Operating Condition Points B and C shall reside within the region defined by the PACL limits shown in Table 1-7 based upon the pump's suction specific speed. Operating Condition A may reside in the area outside the PACL limits.

1.4.2 NPSH Requirements

- NPSHA/NPSHR > 1.1 for centrifugal pumps with suction specific speeds less than 8500 at any operating condition within 85 and 115 percent for BEP. The minimum acceptable NPSH margin ratio at any other location on the pump's head/capacity curve shall be 1.2.
- Pumps with suction specific speeds greater than the above limitations shall have NPSH margins of 1.5 and 2 applicable to the capacity envelope limitations defined previously. Under no circumstances shall the absolute value of the margin above NPSH3 be less than 3.5 feet.
- Pumps with suction specific speeds greater than the above limitations and pumps with impeller materials that do not meet the requirement for duplex cast stainless steel, and all pumps with suction specific speeds greater than 10,000 shall have NPSH margins not less than 2.5 at operating conditions within ±15 percent of best efficiency capacity and not less than 3.5 for all operating conditions falling outside the ±15 percent of best efficiency capacity envelope. Under no circumstances shall the absolute value of the margin for pumps qualifying with the foregoing restrictions, be less than 3.5 feet greater than NPSH3.

Section 2: Wet Well Design

This section establishes criteria for the design of trench-style wet wells for variable speed pumps. The design of trench-style wet wells incorporates features to optimize the scouring velocities within the wet well during cleaning operations and to minimize pump problems resulting from the flow currents. The wet well design shall primarily follow the Hydraulic Institute American National Standard for Rotodynamic Pumps for Pump Intake Design (ANSI/HI 9.8) with modifications. Each pump station will have two wet wells that each contains two dry weather pumps and two wet weather pumps. In total, there are three duty dry weather pumps, three duty wet weather pumps, one standby dry weather pump, and one standby wet weather pump at each pump station.

2.1 Wet Well Approach Conditions and Hydraulic Profile Elevations

The influent sewers and wet well approach pipes shall be designed such that no surcharging is experienced under the full range of design flows. The designer shall account for all head losses occurring over the full range of design flows from the collection system into the wet well.

2.1.1 Influent Sewer

Flow from the collection system will be conveyed to the pump station by gravity through an influent sewer. Influent sewers shall be designed to convey the full range of design flows without surcharging the upstream collection system. The influent sewer shall be designed to maintain velocities of 2.5 FT/s to 3.5 FT/s at average daily dry weather or peak daily dry weather conditions to flush settled debris within the sewer on a daily basis.

2.1.2 Wet Well Approach Pipe

The flow from the influent sewers at each pump station will be conveyed by gravity to the wet well by two approach pipes. The pump station influent sewers will combine in a junction structure upstream of the wet well and be split into two distinct approach pipes, one for each wet well. The approach pipes shall be isolated from the junction structure by a slide gate when the associated wet well is not in service.

The velocity in the approach pipe, upstream from the wet well, shall be no greater than 4.0 FT/s. If possible, target velocities for the approach pipes under peak dry weather flow conditions shall be a minimum of 2.5 FT/s to provide sufficient carriage of solids into the wet well on a daily basis. If this minimum velocity cannot be achieved during peak dry weather flow conditions, the approach pipes will achieve adequate cleaning during wet well cleaning cycles.

The approach pipe upstream from the trench shall be straight and free of fittings or devices that will disrupt the flow uniformity entering the trench for a distance equal to a minimum of eight times the approach pipe diameter.

2.2 Wet Well Configuration Design Criteria

The wet well configuration and dimensions are largely based on the pump inlet bell diameters. The wet well dimensions are shown on details for each pump station and are located in Attachment N. The following components determine the configuration of the wet well.

2.2.1 Pump Inlet Bell

A suction nozzle, fitted with a flared bell inlet, shall be installed on each pump. The suction nozzle will be required to reduce the suction velocity to 4.0 feet per second (no less than 3 feet per second and no more than 5 feet per second) at Condition Point B as defined in Section 1.1. The nozzle length must exceed the difference between the inlet and outlet diameter of the nozzle. The dry weather pump inlet bell diameter,

$D_{dryweather}$, and wet weather pump inlet bell diameter, $D_{wetweather}$, shall be varied in size to meet the criteria stated above.

2.2.2 Wet Well Cross Section

The wet well cross section dimensions are a function of the pump bell inlet diameter and the incoming approach pipe diameter. The wet well cross section consists of a rectangular trench with a trapezoidal section above the trench. Dimensions of the wet well cross section are discussed below.

2.2.2.1 Trench Width

The wet well trench width shall be a minimum of $2D_{wetweather}$. The designer shall also confirm that the trench width can accommodate the selected pump volute diameter plus a minimum of four inches of clearance on each side of the volute. Depending on the pump manufacturer, the pump volute diameter may be much larger than the designed pump inlet bell diameter. The trench with shall be consistent throughout the length of the wet well.

2.2.2.2 Minimum Submergence

The recommended minimum submergence for reducing free surface vortices as recommended by ANSI/HI 9.8-2012 is as follows:

$$S = D + 0.574\frac{Q}{D^{1.5}}, \text{ where}$$

- D = pump bell inlet diameter (inches)
- Q = Design Flow Gallons per minute (GPM)
- S= Submergence, the distance between the minimum liquid level and the height of the inlet (not minimum level to floor; inches)

Calculate the minimum submergence for peak wet weather conditions. Compare the submergence to the NPSHA and NPSH3 as discussed in Attachment G.2. Trench depth shall be adjusted accordingly to meet both the minimum submergence and NPSH3.

2.2.2.3 Above the Trench

Above the trench, the sides shall be sloped outward, away from the trench at a minimum of 45 degrees and lined with PVC or HDPE to facilitate solids falling back into the trench. The sides shall extend to half the depth of the fillet at the wall/floor (partially anchored into the fillet). The entire wet well above the low water level shall be lined with PVC or HDPE to prevent corrosion.

The liquid level in the wet well shall match the approach pipe liquid level. Also, the maximum velocity in the trapezoidal area above the trench shall be a maximum of 1.0 FT/s. The level in the trapezoidal area above the trench shall not exceed the incoming approach pipe water level as this will cause surcharging in the upstream collection system.

2.2.2.4 Water Guide

A water guide is required at the top of the trench and extended to the middle of the ogee ramp. In section view, a water guide fills the sloped sections of the wet well at the top of the trench extending the trench vertically to the length of the first half of the ramp. The water guide keeps the water confined within the width of the trench to guide it down the ramp and prevent it from creeping up the sloped sides of the wet well upon exiting the approach pipe. The water guide shall extend to the height of the approach pipe. The top of the water guides shall be sloped two percent towards the trench to drain any water that may accumulate on the water guide.

2.2.3 Design Ramp for Cleaning

An ogee ramp is required to gather speed down the ramp to cause a hydraulic jump during cleaning cycles. The hydraulic jump occurs at the base of the ramp that moves along the trench floor to the last pump. The purpose of inducing a hydraulic jump is to scour the trench floor and mobilize solids for suction by the last pump. The ogee ramp shall consist of an upper curve and a lower curve connected by a 45 degree tangent.

2.2.3.1 Upper Ramp Radius

The radius of curvature for the upper portion of the ramp, R_{upper}, shall be at least 2.3 times the pressure head of the approach pipe upstream of the sluice gate during cleaning or $2D_{wetweather}$, whichever is greater. The radius using the pressure head of the approach pipe shall be calculated as follows:

$$R_{upper} = FS \cdot 2.33v^2/2g, \text{ where}$$

- R_{upper} = Upper ramp radius (FT)
- FS = 2; Factor of Safety
- v = Cleaning Velocity (FT/s); Calculated using the velocity of the approach pipe at half of the last pump's capacity when the flow freely discharging from the approach pipe is at critical velocity
- g= 32.2 FT/s^2; acceleration of gravity

2.2.3.2 Lower Ramp Radius

The radius of the curvature at the bottom of the ogee, R_{lower}, shall be large enough for a smooth transition to horizontal flow. The lower ramp shall be 0.5 to 1.0 times R_{upper}.

2.2.3.3 Dimensions of the Ramp

The ramp angle shall be 45 degrees and connect the upper ramp radius to the lower ramp radius. The following equations shall be used to determine the horizontal and vertical projections of the ramp:

Horizontal Projection of Upper Curve, H_{upper}:

$H_{upper} = R_{upper} \cdot \sin(\theta_{ramp\_angle})$;

Vertical Projection of Upper Curve, V_{upper}:

$V_{upper} = R_{upper} - R_{upper} \cdot \cos(\theta_{ramp\_angle})$;

Horizontal Projection of Lower Curve, H_{lower}:

$H_{lower} = R_{lower} \cdot \sin(\theta_{ramp\_angle})$;

Vertical Projection of Lower Curve, V_{lower}:

$V_{lower} = R_{lower} - R_{lower} \cdot \cos(\theta_{ramp\_angle})$;

Vertical and Horizontal Projection of Tangent Between Curves, $H_{tangent}$ and $V_{tangent}$;

$H_{tangent} = V_{tangent} = S + 0.5D_{wetweather} - V_{upper} - V_{lower}$; and

Total Horizontal Projection of Ramp, H_{total_ramp} :

$H_{total\_ramp} = H_{tangent} + H_{lower} + H_{upper}$; where

- R_{upper} = Upper ramp radius (FT)
- R_{lower} = Lower ramp radius (FT)
- S = Required Submergence (see Section 2.2.2.2)
- θ_{ramp_angle}= angle of tangent connecting upper and lower radius of the ramp (degrees)

2.2.4 Pump Spacing

Pump intakes shall be spaced a minimum of $2.5D_{wetweather}$ from pump centerline to centerline. The first pump shall be spaced a minimum of $0.5D_{dryweather}$ from the end of the ogee ramp. See Section 2.2.7 for spacing of the last pump from the end wall.

2.2.5 Inlet Floor Clearance

The pump inlet clearance from the floor for the first three pumps shall be a minimum of $0.5D_{wetweather}$ for the wet weather pump and $0.5D_{dryweather}$ for the dry weather pump unless otherwise specified. A minimum of three inches of clearance between the pump inlet and the flow splitter is required to allow solids to enter the inlet. Therefore, the pump inlet clearance from the floor may be raised slightly to meet the three inches of clearance

2.2.6 Flow Splitters and Fillets

Fillets shall be installed along the sides of the trench floor the entire length of the wet well trench to eliminate sidewall vortices. The fillets shall extend from the top of the ogee ramp to provide a good flow pattern down the ramp to the end wall. Fillets shall have a 45 degree slope with a height of $0.38D_{wetweather}$.

Fillets shall be made of shotcrete (Gunite) sprayed, screeded, and troweled smooth. The fillets shall be anchored into the corners of the trench.

Flow splitters help control flow vortices within the wet well and retain the hydraulic energy from the ramp to produce a swift flow of water along the floor during cleaning. A flow splitter shall be installed on the floor of the wet well at the centerline of the trench. The flow splitter shall start at the top of the ramp and end just short of the recessed portion of the wet well for the last pump. The flow splitter shall consist of a triangular section with a height of $0.38D_{dryweather}$ and side slopes of 45 degrees. At the top of the ramp, the flow splitter shall have a nose that tapers to zero to minimize hydraulic disturbances. The flow splitter nose shall extend $1.67D_{dryweather}$ down the ramp and connect to the full triangular flow splitter. Flow splitters shall consist of a stainless steel plate exterior filled with grout and attached with adhesive anchors or stainless steel headed studs to the wet well floor.

A vertical stainless steel plate shall be installed beneath the second pump from the wet well inlet to minimize floor vortices from entering the second pump. The stainless steel plate shall start at the wet well flow and extend beyond the apex of the flow splitter with the plane of the plate perpendicular to the length of the flow splitter. The stainless steel plate shall be $1.5D_{wetweather}$ long and centered below the second pump. The height of the stainless steel plate shall be $0.38D_{wetweather}$.

2.2.7 Last Pump

The end wall clearance to the last pump centerline shall be spaced at 0.75 times the wet weather pump bell inlet diameter unless the selected pump's volute dimensions prevents the specified clearance. If the pump's volute diameter is too large to allow the $0.75D_{wetweather}$ clearance, then the last pump shall be placed as close to the end wall as physically possible with a minimum of 3 inches of clearance between the pump volute and the end wall.

Elevation of last pump shall be calculated by the following method:

- Calculate the sequent depth of the hydraulic jump during cleaning near the end of the wet well. The design flow for a cleaning cycle shall be between 1/3 and 2/3 of the last pump's capacity.
- Set the bottom of the pump inlet bell at $0.5D_{wetweather}$ below the sequent depth.
- Set the floor $0.25D_{wetweather}$ below the pump inlet bell. This will create a recessed floor beneath the last pump where solids may accumulate during the cleaning cycle.

The floor between the last two pumps shall be sloped 30 degrees to reach the floor elevation beneath the last pump. The recessed floor for the last pump shall be large enough to accommodate the pump bell inlet outside diameter.

2.2.8 Anti-rotation Baffle and Floor Cone at Last Pump

An anti-rotation baffle shall be placed between the last pump and the back wall to prevent circulation of liquid between the pump and the pump wall. The anti-rotation baffle shall consist stainless steel plate that protrudes towards the pump as far as possible. The anti-rotation baffle shall extend from the floor of the trench at the end wall to the crown of the approach pipe in the wet well unless the volute of the pump prevents this configuration. The anti-rotation baffle shall be placed such that it does not interfere with the installation and removal of the pump. If the volute dimensions of the pump prevent the baffle from extending from the floor of the wet well to the crown of the approach pipe, then the baffle shall extend from the floor to just below the pump volute with 3 inches of clearance. The pump volute dimensions shall be coordinated with the pump manufacturer. Adhesive anchors shall be used to fasten the baffle to the wall.

A floor cone shall be placed under the last pump. Two vanes, a fore and aft vane, shall be attached to the cone. The floor cone height shall be three inches below the inlet bell of the last pump with 45 degree side slopes. The vanes shall be centered beneath the pump inlet bell parallel with the longitudinal section of the wet well and extend the length of the inlet bell outside diameter. Both the vanes and the cone shall be made of stainless steel and welded to a stainless steel plate that is then attached to the wet well floor with stainless steel headed studs.

2.3 Cleaning

Cleaning shall be conducted between flow rates of 1/3 to 2/3 of the capacity of the last pump. At these flow rates, the wastewater shall move down the ramp at supercritical velocity and form a hydraulic jump at the base of the ramp. The hydraulic jump mobilizes settled solids and conveys it to the last pump. The Froude number at the last pump shall be greater than 3.5. Only the last pump will be in operation during the cleaning cycle.

2.4 Wet Well Level Control

Duty-Standby and lead-lag wet wells shall be determined based on the Operator's selected pump sequence configuration in both wet wells. Flow control and sequenced pump starts and stops shall be accomplished based upon the water surface level in the pump station duty or lead wet well. Variable frequency drives will vary the speed from each of the pumps to maintain the normal depth level of the approach pipe. The automation control narratives and process and instrumentation diagrams (P&IDs) are described in detail and included in TM 5.1 – Control Narratives.

Section 3: Hydraulic Transient Control

Hydraulic transient control is used to prevent damage to the system under possible transient conditions.

3.1 Hydraulic Transient Control Requirements

Hydraulic transient control and analysis is described in detail in TM 6.2 - Transient Analysis. Design conditions for transient control include Peak Wet Weather Flow (PWWF) and Peak Dry Weather Flow (PDWF). Transients occurring during design conditions shall be contained to within the pressure rating of the force main pipes. Full vacuum conditions shall be prevented in the event of power loss to the pump stations.

Surge protection measures shall be incorporated to prevent downsurge pressures from falling below -7 psig anywhere in the pipeline. This criterion shall be used for the selected HDPE force main as a safety factor against vapor cavity formation.

3.2 Equipment

Transient control equipment used in the design will include hydro-pneumatic surge tanks, vacuum breaker valves, combination air-release/vacuum breaker valves, and recirculation pumps. Valves and surge tanks will be installed in pairs to allow for isolation and maintenance. Space limitations prevent the use of surge tanks at Pump Station 1.

Hydro-pneumatic surge tanks shall be installed at Pump Stations 2 and 3. Surge tanks shall be provided with pumped mixing/recirculating loops to prevent grease layer formation. The hydro-pneumatic surge tanks at PS2 and PS3 will completely empty during a high flow surge event; therefore, vacuum breakers are required on the pipe connecting the tanks to the force main. Air release shall be prevented at these locations so that air admitted to the force main by the vacuum breakers may return to the tanks to the greatest extent possible during system re-start. Vacuum breaker valves shall be Vent-Tech model SWG-N.

Hydro-pneumatic surge tanks shall be the air pressurized, non-bladder type. Air compressors shall be sized to charge the surge tanks to operating pressure in less than three hours. Pipeline vacuum breaker valves shall be the combination air-release/vacuum breaker type.

Horizontal, constant speed, end suction, frame mounted, high pressure chopper pumps for pumping fluids containing wastewater and wastewater solids shall be installed for each surge tank facility. The pumps will be used for recirculating raw municipal wastewater in the surge tank. A dedicated pump will be provided for each surge tank. The pumps shall be installed within an acoustical enclosure capable of reducing the noise level of the pump and motor, including all ventilation fans, to a maximum of 85 dbA at 3 feet in any direction.

Suction will be from the recirculation outlet piping from the surge tanks and discharge back to the surge tank via the recirculation inlet piping to the surge tank. The pumps will operate at constant speed. Surge tank operating pressure will be 50 psi with infrequent transient surges up to 60 psi occurring during power failures and less or transient pressure surges occurring when the pump station pumps start up and shut down. The on/off frequency of the pumps will be a minimum of 1 to 4 cycles per hour. The recirculation pumps shall be designed to withstand these surge pressures as well as the operating pressures in the system.

Materials in the pumped fluid shall be macerated and conditioned by the pump as an integral part of the pumping action. The pump must have demonstrated the ability to chop through, mix and pump high concentrations of solids such as plastics, heavy rags, grease and hair balls, wood, paper products and stringy materials without plugging. The pump effluent shall not contain solids larger than 3 inches in the longest dimension. The fluid to be pumped is anticipated to range between 55 degrees F and 85 degrees F and contain up to 10,000 mg/L of solids consisting of grit and organic material with small quantities of petroleum products and animal fats and greases. All components shall be designed to safely withstand forces resulting from flow reversals up to 125 percent of maximum speed within the pump during shutdowns caused by power failure. The pump shall perform in accordance with the conditions listed in Table 3-1 below.

Table 3-1. Condition A[1,2,3] (Guaranteed Performance)		
	PS2	PS3
Capacity, GPM	350	350
Total head, feet	8	7
Piping connection size, inches, minimum		
Inlet	6	6
Discharge	4	4
Speed, rpm, maximum	1150 or 1750	1150 or 1750
Horsepower, maximum[4,5]	7.5	7.5

NOTES:

1. Condition A shall be taken as the rated, continuous-duty operating condition. Performance at the rated condition shall be guaranteed in accordance with tolerances set forth in the Test Standards of the Hydraulic Institute, except that any increase in head or capacity or both which results in a power requirement greater than the pump motor's nameplate rating will be cause for rejection.

2. Total head in the above tabulation is the algebraic difference between the discharge head and suction head as defined in the standards of the Hydraulic Institute. Net positive suction head available (NPSHA) in the above tabulation is calculated in accordance with Hydraulic Institute standards for the worst combination of fluid temperature and barometric pressure.

3. Because the pumps are to operate at constant speed, the pump shall be selected so that the rated condition (Condition Point A) lies within 5 percent (based upon capacity) of the best efficiency point on the pump's head-capacity curve.

4. The motor shall be non-overloading. Pump selections which do not conform to this requirement without requiring a motor with a nameplate rating greater than that listed are not acceptable.

5. The motor shall have internal thermal protective devices and self-resetting relay interlock in the unit control.

Section 4: Odor Control

Each of the three raw sewage pump stations (PS1, PS2, and PS3) will have an on-site odor control system treating odors from wet wells and other odorous areas. Foul air from the existing wet wells at MPPS and RCPS is currently being ventilated directly to the atmosphere (no odor control). At RSPS, foul air from the existing wet wells is currently exhausted to two at-grade biofilters; however, these biofilters have not been functioning well since 2009.

4.1 Treatment Options

Three odor control technologies were initially evaluated; activated carbon, chemical scrubbers, and bulk media modular biofilters using inorganic, engineered media. Because of the large footprint required for a biofilter system, SVCW eliminated this technology from further predesign evaluation. Therefore, the recommended odor control technologies for consideration at each pump station are chemical scrubbers and activated carbon. Chemical scrubbers were chosen over activated carbon because the carbon would need replacement frequently due to high loads, which increases operating costs.

Single-stage odor control systems are assumed for this preliminary design. A two-stage system may be needed if it is determined in subsequent design stages that a single stage will not provide enough odor reduction at offsite sensitive receptors. Of the three pump stations in the design, PS2 and PS3 have potential nearby sensitive receptors, including a police station approximately 20 FT from the PS2 fence line and a restaurant approximately 180 FT from the PS3 fence line. PS1 is located in a comparatively remote area, which indicates that a single stage of odor treatment may be sufficient.

Because current odor concentration data were not available for the pump station sites, a gas-phase H_2S concentration of 5 ppmv was assumed for odor control system inlets in this predesign. This is the estimated concentration for the inlet of each odor control system for each pump station. It is recommended that further odor sampling over a two-week period should be performed for detailed design to confirm average and peak H_2S loads to the new odor control systems.

4.2 Pump Station 1 Odor Control Design Criteria

The preliminary odor control design criteria for PS 1 are shown below in Tables 4-1 and 4-2.

Table 4-1. PS1 General Odor Control Design Criteria

Parameter	Units	Value	Notes
Air Stream Design Criteria			
Total Air Flow Rate	cfm	2,800	Based on wet well volume and air changes per hour
Air Change Rate	ACH[1]	12	To meet NFPA Class 1, Division 1 requirements
Total Air Stream H_2S Concentration	ppmv	5	Estimated for calculations purposes; typical range may be from 0 to 100 ppmv, depending on upstream conditions
Fan Design Criteria			
Number of Supply Fans (Duty/Stand-By)	-	2/0	One per wet well
Supply Fan Horsepower	HP	1	
Number of Exhaust Fans (Duty/Stand-By)	-	2 / 1	Constant speed exhaust fans; one per wet well
Exhaust Fan Horsepower	HP	5	

1 – ACH = Air Changes per Hour

Table 4-2. PS1 Chemical Scrubber Odor Control Design Criteria			
Parameter	**Units**	**Value**	**Notes**
Scrubber Design Criteria			
Number of Scrubbers	-	1	Single-stage using hypochlorite and caustic
Vessel Diameter	FT	3	Based on maintaining the optimal design gas flow loading rate through scrubber
Gas Flow Loading	lb/hr/FT^2	2,000	Typical range is 1,800 to 2,250 (MOP 25)[1]
Liquid Flow Rate (Recirculation Rate)	GPM	50	Calculated using gas flow rate, scrubber area, and water density
Liquid Flow Rate (Recirculation Rate)	lb/hr/FT^2	3,500	Typical range is 3,000 to 4,000 (MOP 25)
Packing Height	FT	10	Standard height; typical range is 8 to 12 FT
Blowdown Flow Rate	GPM	4.0	Estimated at 2 percent of recirculation rate; typical assumed range is 1 to 5 percent of recirculation rate
Makeup Water Flow Rate	GPM	4.0	Assume equal to approximate blowdown rate
Hypochlorite (12.5% strength) Flow Rate	GPD	12.8	Typical average flow rate based on stoichiometry
Caustic Soda (25% strength) Flow Rate	GPD	1.3	Typical average flow rate based on stoichiometry
Number of Acid Metering Pumps (Duty/Stand-By)	-	1 / 1	
H_2S Removal	%	99.5	Minimum removal rate through scrubber
Recirculation Pump Horsepower	HP	0.2	Each pump
Pressure Drop through Packing	i.w.c.	1.5	Assuming 0.15 i.w.c. per FT of packing; typical range is 0.1 to 0.2 i.w.c. per foot of packing
Scrubber Footprint Dimensions	FT	5	Diameter - includes concrete support pad assumed at 1 FT on each side. Does not include fan space.
Chemical Storage Design Criteria			
Caustic Soda Storage Tank Volume	gal	100	Polyprocessing vertical tank
Caustic Soda Storage Tank Diameter	FT	2	Selected tank is 5.6-FT tall
Hypochlorite Storage Tank Volume	gal	400	Polyprocessing vertical tanks
Hypochlorite Storage Tank Diameter	FT	3.75	Selected tank is 5.25-FT tall
Chemical Storage Footprint Area	FT x FT	12 x 22	Includes containment area
Chemical Storage Tank Material	-	HDPE	High-Density Cross-linked Polyethylene: Double Walled
Days of Chemical Storage	days	30	Maximum, design for 25 days

[1] *Water Environment Federation Manual of Practice (MOP) 25*

4.3 Pump Station 2 Odor Control Design Criteria

The recommended design criteria for PS 2 are shown below in Tables 4-3 and 4-4.

Table 4-3. PS2 General Odor Control Design Criteria

Parameter	Units	Value	Notes
Air Stream Design Criteria			
Total Air Flow Rate	cfm	19,300	Based on wet well volume and air changes per hour
Air Change Rate	ACH[1]	12/20	12 for wet wells, 20 for screen building
Total Air Stream H_2S Concentration	ppmv	5	Estimated for calculations purposes; typical range may be from 0 to 100 ppmv, depending on upstream conditions
Fan Design Criteria			
Number of Supply Fans (Duty/Stand-By)	-	5 / 1	One supply fan per wet well. Two duty supply fans for lower level of screening building. One duty fan and one standby fan for lower level of screening building.
Horsepower, Screen Building Supply Fan (Lower Level/Upper Level)	HP	3/1	
Horsepower Wet Well Supply Fan	HP	1	Current estimate; will be confirmed upon final duct routing
Number of Exhaust Fans (Duty/Stand-By)	-	4/1	Two duty fans and one standby fan for wet well and two duty fans for screenings building.
Horsepower, Screen Building Exhaust Fan	HP	10	
Horsepower Wet Well Exhaust Fan	HP	3	Current estimate; will be confirmed upon final duct routing

1 – ACH = Air Changes per Hour

Table 4-4. PS2 Chemical Scrubber Odor Control Design Criteria

Parameter	Units	Value	Notes
Chemical Scrubber Design Criteria			
Number of Scrubbers	-	1	Single-stage using hypochlorite and caustic
Vessel Diameter	FT	8	Based on maintaining the optimal design gas flow loading rate through scrubber
Gas Flow Loading	lb/hr/FT^2	2,000	Typical range is 1,800 to 2,250 (MOP 25)
Liquid Flow Rate	GPM	350	Also referred to as recirculation rate
Liquid Flow Rate	lb/hr/FT^2	3,500	Typical range is 3,000 to 4,000 (MOP 25)
Packing Height	FT	10	Standard height; typical range is 8 to 12 FT
Blowdown Flow Rate	GPM	7	Estimated at 2 percent of recirculation rate
Makeup Water Flow Rate	GPM	7	Assume equal to approximate blowdown rate
Hypochlorite (12.5% strength) Flow Rate	GPD	88.4	Typical average flow rate based on stoichiometry
Caustic Soda (25% strength) Flow Rate	GPD	9.1	Typical average flow rate based on stoichiometry
Number of Acid Metering Pumps (Duty/Stand-By)	-	1 / 1	
H_2S Removal	%	99.5	Minimum removal rate through scrubber
Recirculation Pump Horsepower	HP	2.8	Each pump
Pressure Drop through Packing	i.w.c.	1.5	Assuming 0.15 i.w.c. per FT of packing

Table 4-4. PS2 Chemical Scrubber Odor Control Design Criteria			
Parameter	Units	Value	Notes
Scrubber Footprint Dimensions	FT	20	Diameter - includes concrete support pad
Chemical Storage Design Criteria			
Caustic Soda Storage Tank Volume	gal	615	
Caustic Soda Storage Tank Diameter	FT	4	Selected tank is 7.75-FT tall
Hypochlorite Storage Tank Volume	gal	2,750	
Hypochlorite Storage Tank Diameter	FT	8.2	Selected tank is 9.3-FT tall
Chemical Storage Footprint Area	FT x FT	16 x 28	Includes containment area
Chemical Storage Tank Material	-	HDPE	High-Density Cross-linked Polyethylene: Double Walled
Days of Chemical Storage	days	30	Maximum, design for 25 days

4.4 Pump Station 3 Odor Control Design Criteria

The recommended design criteria for PS 3 are shown below in Tables 4-5 and 4-6.

Table 4-5. PS3 General Odor Control Design Criteria			
Parameter	Units	Value	Notes
Air Stream Design Criteria			
Total Air Flow Rate	cfm	6,900	Based on wet well volume and air changes per hour
Air Change Rate	ACH[1]	12	To meet NFPA Class 1, Division 1 requirements
Total Air Stream H_2S Concentration	ppmv	5	Estimated for calculations purposes; typical range may be from 0 to 100 ppmv, depending on upstream conditions
Fan Design Criteria			
Number of Supply Fans (Duty/Stand-By)	-	2 / 0	One fan per wet well.
Supply Fan Horsepower	HP	1	Current estimate; will be confirmed upon final duct routing
Number of Fans (Duty/Stand-By)	-	2 / 1	Constant speed exhaust fans One duty exhaust fan per wet well.
Exhaust Fan Horsepower	HP	5	Current estimate; will be confirmed upon final duct routing

1 – ACH = Air Changes per Hour

2 – TBD = To be Determined

2 – Estimated as the sum of methyl mercaptan, dimethyl sulfide, and dimethyl disulfide concentration

Table 4-6. PS3 Chemical Scrubber Odor Control Design Criteria			
Parameter	Units	Value	Notes
Chemical Scrubber Design Criteria			
Number of Scrubbers	-	1	Single-stage using hypochlorite and caustic
Vessel Diameter	FT	8	Based on maintaining the optimal design gas flow loading rate through scrubber
Gas Flow Loading	lb/hr/FT^2	2,000	Typical range is 1,800 to 2,250 (MOP 25)
Liquid Flow Rate	GPM	140	Also referred to as recirculation rate
Liquid Flow Rate	lb/hr/FT^2	3,500	Typical range is 3,000 to 4,000 (MOP 25)

Table 4-6. PS3 Chemical Scrubber Odor Control Design Criteria			
Parameter	Units	Value	Notes
Packing Height	FT	10	Standard height; typical range is 8 to 12 FT
Blowdown Flow Rate	GPM	3	Estimated at 2 percent of recirculation rate
Makeup Water Flow Rate	GPM	3	Assume equal to approximate blowdown rate
Hypochlorite (12.5% strength) Flow Rate	GPD	31.4	Typical average flow rate based on stoichiometry
Caustic Soda (25% strength) Flow Rate	GPD	3.2	Typical average flow rate based on stoichiometry
Number of Acid Metering Pumps (Duty/Stand-By)	-	1 / 1	
H_2S Removal	%	99.5	Minimum removal rate through scrubber
Recirculation Pump Horsepower	HP	1	Each pump
Pressure Drop through Packing	i.w.c.	1.5	Assuming 0.15 i.w.c. per FT of packing
Scrubber Footprint Dimensions	FT	7	Diameter - includes concrete support pad
Chemical Storage Design Criteria			
Caustic Soda Storage Tank Volume	gal	205	
Caustic Soda Storage Tank Diameter	FT	2.6	Selected tank is 6.2-FT tall (for preliminary design)
Hypochlorite Storage Tank Volume	gal	1,000	Volume sufficient for number of days of chemical storage
Hypochlorite Storage Tank Diameter	FT	7.2	Selected tank is 4.67-FT tall
Chemical Storage Footprint Area	FT x FT	15 x 26	Includes containment area
Chemical Storage Tank Material	-	HDPE	High-Density Cross-Linked Polyethylene: Double Walled
Days of Chemical Storage	days	30	Maximum, design for 25 days

Section 5: Bar Screens

Screens shall operate in parallel to provide multiple pathways for flow during maintenance or under PWWF conditions. During PWWF flow conditions, a minimum of two screens will be in operation. A total of three screen channels will run in parallel. Two screen channels will have mechanically cleaned bar screens (MCBS) and the third screen channel will consist of a manually cleaned bar screen. The MCBS shall be front-cleaned by multiple rake bars bolted at selected distances to a pair of drive chains. Each mechanically cleaned bar screen shall consist of a frame, bar rack, deadplate, chain drive assembly, multiple rake bars, discharge chute, gear reducer, motor, mounting brackets, local control panel, and all necessary appurtenances to provide a complete mechanical screening removal system. Designs that employ the use of cables or wire rope assemblies shall not be allowed. The rake bars shall transport the material up out of the sewage flow, across a deadplate and discharge to a fabricated sluicing channel which connects to the screenings conveyor. The mechanically cleaned bar screen rakes shall discharge into a sluicing channel and prevent debris from falling back into the channel. The sluicing channel will convey screenings into a single washer/compactor that will have sufficient capacity to handle solids from both mechanically cleaned bar screens. Screenings from the washer/compactor will be transported to a roll out dumpster by a chute.

Each channel and screen shall be capable of handling half of the PWWF or 19 mgd. Under ADWF, only one of the MCBS will be in operation. Two of the MCBS will operate during PWWF. In the event that both MCBS are out of operation or one MCBS is out of service during a PWWF event, flow will be bypassed to the manually cleaned bar screen channel with a capacity of half the PWWF. SVCW is considering whether each screen should be able to accommodate the full PWWF of 38 MGD for complete mechanical redundancy.

5.1 Performance Guidelines

Bar screens shall be suitable for installation under the conditions in Table 5-1.

Table 5-1. Mechanical Bar Screen Criteria	
Peak flow per screen, mgd	19.0
Approach velocity range, FT/s	1.25 – 2.5
Maximum velocity through bars, FT/s	3.0
Channel width minimum, FT	3.5
Channel depth minimum, FT	4.5
Maximum upstream water depth, FT	4.0
Minimum approach length, FT	Twice the screen width
Angle from horizontal, degrees	70-80
Clear spacing between bars, inches	0.75
Bar diameter, inches	0.25
Screen Wash water source	Reclaimed
Material:	
Bar rack	Type 304 stainless steel*
Deadplate	Type 304 stainless steel*
Discharge chute	Type 304 stainless steel*
Cleaning rake, rake arms, and wiper	Type 304 stainless steel*
Side frames	Type 304 stainless steel*
Fasteners and miscellaneous hardware	Type 316 stainless steel*
Connecting arms (rake arms excluded)	Type 304 stainless steel*

Note:

**Type 316 stainless steel shall be considered during final design.*

The approach velocity in the screen channel should be a minimum of 1.25 FT/s during minimum flow for at least one hour of the day to minimize solids deposition in the channel. The maximum slot velocity (through the screens) should not exceed 3.0 FT/s during PWWF.

The maximum upstream water depth shall be based on maintaining normal flow in the incoming sewer line to prevent surcharge.

5.2 Cutthroat Flume

A cutthroat flume shall be installed in each screen channel following the bar screens to regulate the velocity in the channel. Flumes shall be designed to maintain a minimum 20-inch water level differential downstream of the screens during ADWF. The flume shall be designed for free flow conditions during PWWF. The depth of the flume shall be the depth of water in the screen channel during PWWF minus the headloss through the screen.

The following discharge equation of free flow through a cutthroat flume from the Isco Open Channel Flow Measurement Handbook, 5th Edition can be used to determine the width of the flume.

$$Q = KW^{1.025}H^{n_1} = CH^{n_1}$$

Q = flow rate
H = head measured at point H_a
K = free flow coefficient
C = free flow coefficient
W = throat width
n_1 = free flow exponent

K and n_1 depend on the flume length. Values for these coefficients can be found in Table 4-9A from the Isco Open Channel Flow Measurement Handbook, 5th Edition.

5.3 Conveyance

Screened material shall be discharged from the high point of the screen through a chute directly into the washer compactor. Discharge chutes shall be 3/16 inch minimum thickness, suitably reinforced to withstand impacts from large objects (e.g., branches, building materials, etc.) which may occasionally be removed by the rake mechanism.

This page intentionally left blank.

A. ATTACHMENT

Civil Design Criteria and Geotechnical Requirements

This attachment outlines the parameters which will form the basis for general civil design including vehicular access to the new or replaced facilities and structures, site drainage, and site grading, and yard piping.

A.1 Purpose

The purpose of this document is to guide the pump station final design teams and to ensure consistent quality and similar facilities for ease of operation and maintenance. This document is meant to be a working document for the design teams such that during the design, changes can be made based on design team review and consensus.

A.2 Codes and Standards

The site work will in compliance with the applicable portions of the following codes and standards:

1. Local respective zoning ordinances (City of Menlo Park, Belmont, San Carlos, Redwood City, and San Mateo County).
2. California Building Standards Code (CBC), latest Code edition adopted by the State of California at the time of design.
3. American Nation Standards Institute (ANSI) standards.
4. U.S. Department of Labor Occupational Safety and Health Act (OSHA).
5. American Society for Testing and Materials (ASTM) standards.
6. State of California Department of Transportation, Standard Specifications, Latest Edition
7. State of California, Department of Transportation, Standard Plans, 2002.
8. State of California, Department of Transportation, Highway Design Manual, 5th Edition, 1995 with amendments.
9. West Bay Sanitary District, City of Belmont, San Carlos, and Redwood City Standard Details.
10. City of Menlo Park, San Carlos and Redwood City Storm Drainage Criteria.

A.3 Soil Information

The geotechnical information, criteria, and recommendations in the geotechnical report entitled "Draft Predesign Geotechnical Interpretive Report (GIR) South Bayside System Authority Pump Station Predesign," November 2013, prepared by DCM Consulting, Inc. will be used in the design of civil/general site development facilities.

For the final design of the three pump stations, it is recommended that two Cone Penetrometer Tests (CPT) to depths of 75 to 100 feet or refusal at each pump station site be performed to generate a continuous soil profile and serve as the basis for liquefaction settlement analysis. Pore pressure dissipation tests should be performed at all sand layers encountered to evaluate artesian

groundwater pressures, if present. The CPT profile/data and seismic setting can then be entered into the computer program LiquefyPro (or equivalent) to evaluate individual sand layers that are likely to liquefy and to estimate the resultant seismic settlement (if any) at the ground surface and at the base of the pump stations.

A.4 General

New facilities to be constructed on the pump station sites include pumps, piping, wet wells, valves, valve vaults, and new building structures for one or more of the pump station sites. The following objectives shall be met with the pump station upgrades:

1. Provide vehicle and pedestrian access to new and upgraded facilities and structures.
2. Provide site grading to minimize earthwork and achieve positive drainage of storm water runoff, whether it be discharged offsite or to the wet well.
3. Provide a secure site.
4. Proper connections to new forcemains.
5. Proper removal of transfer of flows from old pump station to new forcemain.
6. Proper removal and/or abandonment of old pump station facilities.

A.5 Utility Coordination

New utility services will be provided for the new pump stations. The following objectives shall be met with for utility services:

1. Coordination with existing services so that existing pump stations are operational during construction of new, replacement pump stations.
2. Provide fire service lateral to each pump station with proper reduced pressure backflow prevention assemblies. Fire service will provide optional fire sprinkler service and fire hydrant(s). Coordinate with appropriate water departments.
3. Provide domestic water service to each pump station with proper reduced pressure backflow prevention assemblies. Domestic water will provide water for miscellaneous potable needs at each pump station site. Coordinate with appropriate water departments.
4. Provide recycled water service at PS2 and PS3 sites. A 6-inch line from the main RCW line will be provided to each site. Potential uses for RCW are wash down water, chemical scrubber for odor control, screen spray water, screen sluice channel water, and general uses such as toilet flushing and irrigation.
5. Provide major upgrade to electrical services as needed for each pump station. Coordinate with PG&E.
6. Existing utilities may need to be relocated to allow for the installation of new facilities.

A.6 Driveway Layout/Traffic Access

New driveways and drive aisles will be constructed to allow vehicle access to and around the proposed facilities. The following shall be the criteria for design:

1. Asphalt pavement section at all pump stations should consist of a minimum of 3 inches of asphaltic concrete over 12 inches of Class 2 aggregate base rock or as recommended by the geotechnical engineer for pavement sections placed over bay mud.

2. Pavement subgrade soil must be scarified to a depth of 8 inches; moisture conditioned to near optimum moisture content and compacted to a minimum of 95 percent relative compaction per ASTM D1557.
3. Asphalt pavement section replacement in City streets must match existing but in no case should be less than 3 inches of asphaltic concrete over 12 inches of aggregate base rock compacted to a minimum of 95 percent relative compaction per ASTM D1557.
4. Driveways and drive aisles should be designed to a maximum width allowed on each pump station site. This will be site specific based on site constraints. Similarly, turning radiuses shall be maximized based on site constraints. Obtaining a 50' turning radius should be the objective.
5. Improvement details for driveway curb cuts within public right of ways shall be per Standard Details.

A.7 Survey Control

Vertical control for this project will be NGVD 29' datum +100'. Horizontal control will be based on the NAD 83.

A.8 Site Grading

All design site grading and earthwork will be in accordance with the following:

1. Earthwork will meet the minimum design criteria and recommendations of the Geotechnical Data Report by Jacobs Associates, October 22, 2013.
2. Site grading plans shall show intended flow arrows as well as spot elevations
3. Cut slopes shall be 1:1(H:V) maximum up to 20 feet high. Fill slopes will be no greater than 10 percent.
4. Areas that require fill shall be compacted to 90 percent minimum in accordance with ASTM D1557. Areas that will support vehicle pavement structural sections shall have the upper six inches compacted to a minimum of 95 percent.
5. Structural and utility trench backfill shall be per the recommendations of the geotechnical report.
6. Grading will provide positive drainage of storm water runoff and will be collected to pump station wet wells.
7. Sea level rise should be accounted for in the final designs for each pump station site.
8. Retaining walls may be required at the PS2 site. Retaining walls shall be composed of cast-in-place concrete.

A.9 Drainage

The following criteria will be followed for drainage design at each pump station:

1. Storm drainage systems at each pump station will be designed for a 10 year return period. See Figures A-1, A-2, and A-3 for intensity-duration-frequency (IDF) curves for Menlo Park, Redwood City, and San Carlos. Storm runoff will be diverted to the new wet well structures.
2. Storm drainage structures such as drop inlets and curb inlets will be consistent to all pump stations. Inlets shall be 18"x18", H-20 full vehicular traffic rated.
3. Storm drain piping shall be High Density Polyethylene, SDR 17.

4. Curb containment is required for the diesel fuel storage areas. A sump should be placed within the containment area to collect rain water and spills. The sump should be valved and drained to a manhole upstream of the wet well.
5. Local drainage to the wet will should be provided for certain areas within the pump station sites. These areas include diesel fuel storage areas, pump lift areas next to each wet well, chemical storage areas, etc. This is to be determined in final design. Other areas should drain to municipal storm drain systems.

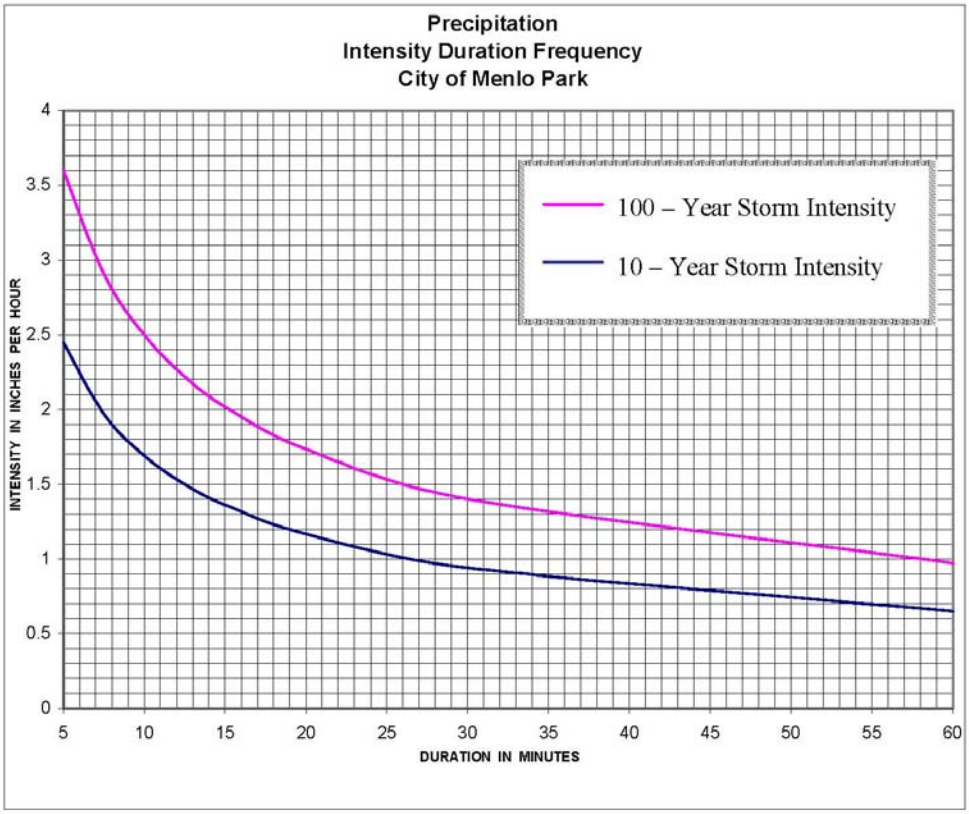

Station	Statio No	County	Lat	Long.	Elev.	Source	Yrs Rec	Slope	Intercept
Menlo Park	E70 553 20	San Mateo	37.451	-122.186		USGS	5	0.462	0.439

CITY OF MENLO PARK STANDARD DETAILS

NO.	REVISIONS	DATE

ATTACHMENT C
MENLO PARK IDF CURVE

APPROVED

Director of Engineering Services R.C.E. No.40996

DRAWN DL | CHECKED PS | DATE 07/30/08 | SCALE NTS | SHEET | STD. DETAIL No.: IDF

Figure A-1. Menlo Park IDF Curve

ATTACHMENT G

I.D.F. CURVES

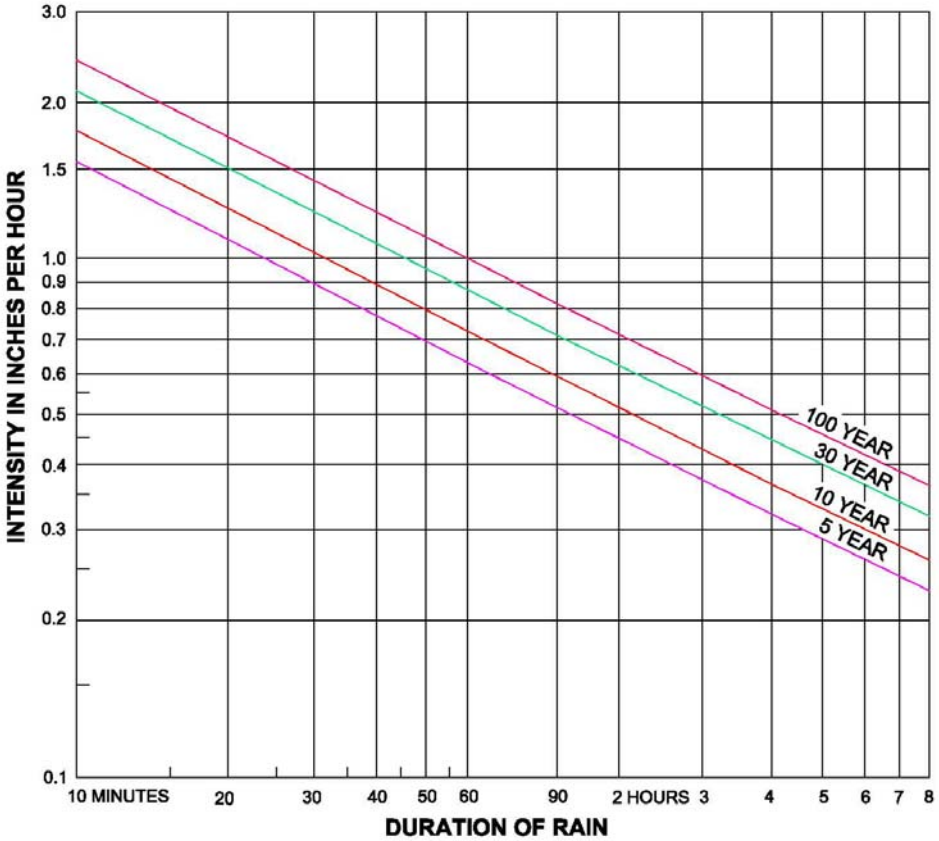

RAINFALL INTENSITY FREQUENCY CURVES FOR REDWOOD CITY

XII–15

Figure A-2. Redwood City IDF Curve

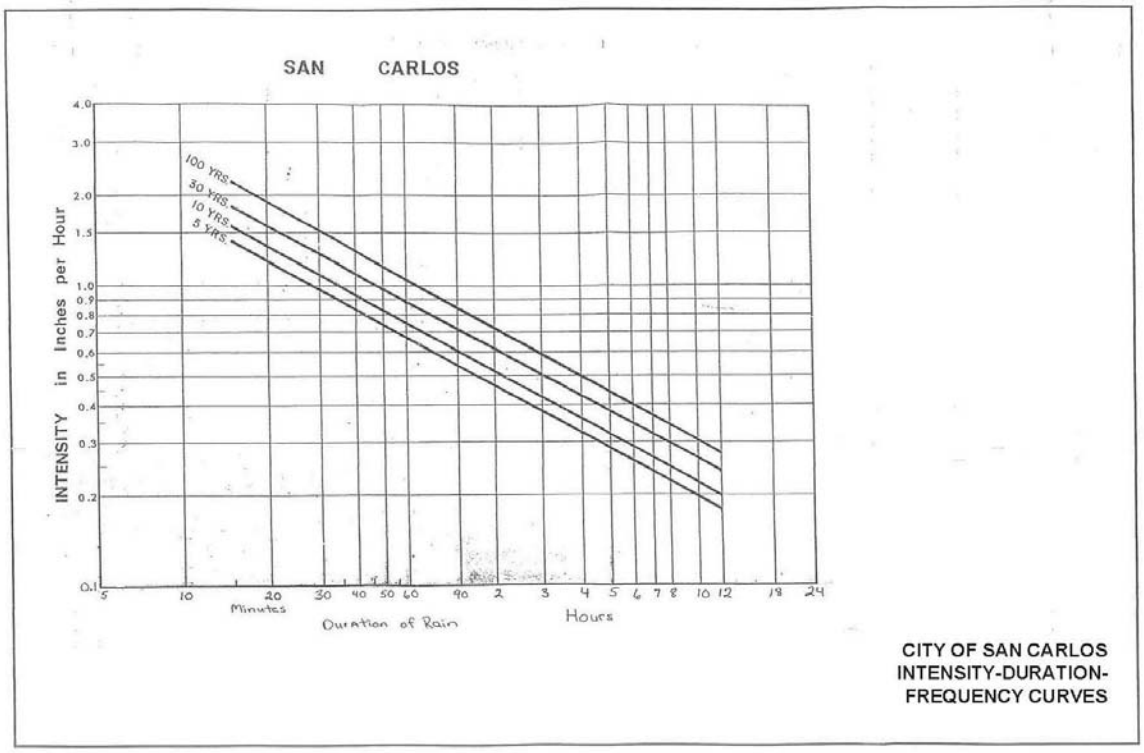

Figure A-3. San Carlos IDF Curve

A.10 Site Security/Access

The following criteria will be followed for site security/access at each pump station:

1. Fencing shall be composed of PVC coated chain link with razor wire.
2. Motorized gate controlled by key pad will be provided at each pump station. Material for gates shall be ?
3. Lighting at each station will be designed with a minimum 1footcandle illumination. Lighting shall be LED and standard established and installed at each pump station.
4. Access to PS2 from the police site. Potential easements will be identified in pre-design. Actual easement process will be part of final design.

A.11 Surface Conditions

The following criteria will be followed for surface conditions at each pump station:

1. Site will be paved with either asphalt concrete (AC) or concrete. Concrete will be placed in loading areas or in storage areas where degradation of AC may occur due to material being stored.
2. Landscaping shall be included at each pump station site. PS2 and PS3 will be coordinated with appropriate City agencies. PS1 will require coordination with the West Bay Sanitary District and the City of Menlo Park due to the City's desire for adjacent intersection to be a "gateway" to the city.

A.12 Standard Details

See Attachment N for standard details. These details include:

1. City of Belmont, City of San Carlos, City of Redwood City and West Bay Sanitary District Standard manholes.
2. Driveway details for the City of San Carlos and the City of Redwood City.
3. Manhole and frame and cover detail for manholes with pump station sites.

B. ATTACHMENT

Security Criteria

The Security Criteria is based on the SVCW (formerly SBSA) Security Guidance Document, September 2011.

B.1 Purpose

The purpose of this document is to guide the pump station final design teams and to ensure consistent quality and similar facilities for ease of operation and maintenance. This document is meant to be a working document for the design teams such that during the design, changes can be made based on design team review and consensus.

B.2 Pump Station 1 (Menlo Park Pump Station)

Pump Station 1 (PS1) should be designed with additional security beyond what is installed at the existing station, such as providing door locks, intrusion alarms, and automation ability with operational parameters used as I/O for the SCADA system to allow remote monitoring. The chemical scrubber shall have a separate security system such as a keypad with an alarm upon opening without permission and should be connected to SCADA. There is an exterior, above-grade diesel fuel tank that will require separate security treatment, such as a separate enclosure, fence and gate, and/or sensors on the tank itself that are provided with alarms connected to SCADA.

B.3 Pump Station 2 (Redwood City Pump Station)

PS2 will require perimeter security and door sensors with alarms for intrusion. The chemical storage tank area shall have a separate security system such as a keypad with an alarm upon opening without permission. All of these alarms should be connected to SCADA. There is an exterior, above-grade diesel fuel tank that will require separate security treatment, such as a separate enclosure, fence and gate, and/or sensors on the tank itself that are provided with alarms connected to SCADA.

B.4 Pump Station 3 (San Carlos/Belmont Pump Station)

PS3 will require perimeter security and door sensors with alarms for intrusion. The Chemical storage tank shall have a separate security system such as a keypad with an alarm upon opening without permission. All of these alarms should be connected to SCADA. Valves shall be separately protected with tamper-resistant valve covers and separate alarm conditions for valve position (e.g., closed when should be open will trigger alarm to SCADA). There is an exterior, above-grade diesel fuel tank that will require security treatment, such as a separate enclosure, fence and gate, and/or sensors on the tank itself that are provided with alarms connected to SCADA.

B.5 Security Data

Incident reports, instructions on handling security data, catalogues of key holders and account numbers and security codes for keypads should all be given special consideration in the data storage scheme.

B.6 Supervisory Control and Data Acquisition (SCADA)

The SVCW SCADA system is comprised of SCADA Servers, SCADA Workstations, Programmable Logic Controllers (PLC) to control individual processes, and network/communications infrastructure. The system has distributed logic such that the individual PLCs can operate independent of the server. Workstations will be located at remote pump stations. Recommended physical security of the SCADA equipment includes:

B.6.1 Instrumentation

Critical instruments for process control should be located within locked cabinets or buildings, with perimeter protections preventing easy access of vandals.

B.6.2 PLC/SCADA Network Panels

Panels should be located in locked, access-controlled buildings. PLCs and SCADA Network equipment should be within locked cabinets. Door switches should be included to provide operator notification through SCADA on access into the PLC or SCADA network panel.

B.6.3 SCADA Workstations

SCADA Workstations should be located in locked, access-controlled buildings. Control for all workstations located outside of the plant server room or plant control room shall require authentication in the form of individually identifiable accounts, with access being logged. Door switches should be included to provide operator notification through SCADA on access into the workstation panel.

B.6.4 Pump Station Network Cabling (including Fiber Cables)

Network cabling should be encased in conduits. All access points to the cabling should be locked or sealed to prevent easy access. Redundant physical paths for in-plant networks should be provided.

B.6.5 Pump Station Remote Communications

Remote communications cabling should be encased in conduits. All access points to the cabling should be locked or sealed to prevent easy access. Dual communications paths should be provided. Encryption should be considered during the design.

B.6.6 Environmental Controls

PLC and SCADA Servers, Workstations, Network Equipment, and PLCs should be installed to avoid flood areas. Seismic bracing should be provided for all SCADA equipment, including all workstations. Power should be protected from surges, with adequate backup and redundancy to maintain power through typical failures.

B.6.7 Security Cameras

Security cameras on SCADA shall be fixed focus and evaluated on a case by case basis. If security systems/measures require separation from the SCADA network, these systems will need to be reviewed and approved by SVCW. PTZ, if used, cannot be controlled by the SCADA network.

B.6.8 Other Considerations

Physical equipment failure protection should be provided in the form of highly available architectures (unit redundancy) to include alternate physical cable paths. Considerations must also include highly available logical data flow paths. These paths can be adversely affected through logical or physical means. Actively monitored access, logical and physical must occur. This includes SCADA servers and workstations as well as User Account control servers which may or may not reside inside of physically secure plant perimeters.

B.7 Summary

Table B-1 below summarizes all of the major recommendations by feature.

For further explanation, refer to the appropriate feature section in the above discussion.

Table B-1. Security Features at Each Pump Station

Feature	Perimeter Fence and Gate	(Interior) Fence and Gate	Gate / Door Locks	Electronic Key Card or Key Pad Access	Intrusion Alarm	PTZ/ Fixed-Focus Cameras	SCADA-based alarm	Hatch locked	Signage	Other	Special Considerations and Notes
PS1	✓		✓		✓	✓	✓	✓	✓	✓	Inlet Structure, Exterior Diesel tank
PS2	✓		✓	✓	✓	✓	✓	✓	✓	✓	Chemical Storage Tank, Inlet Structure
PS3	✓		✓	✓	✓	✓	✓	✓	✓	✓	Graffiti-resistant paint

This page intentionally left blank.

C. ATTACHMENT

Corrosion Control

For design criteria for Corrosion Control, please refer to the Soils Corrosion Investigation and Control TM by V&A, January 8, 2014 located in Appendix G of the Conveyance System Pump Station Predesign Report.

This page intentionally left blank.

D. ATTACHMENT

Architectural Design

Will be completed as part of final design.

This page intentionally left blank.

E. ATTACHMENT

Structural Design

This section describes the structural design guidelines that will be used for design of the SVCW pump stations, both building and non building structures, including applicable codes and standards, design load criteria, and materials of construction.

E.1 Purpose

The purpose of this document is to guide the pump station final design teams and to ensure consistent quality and similar facilities for ease of operation and maintenance. This document is meant to be a working document for the design teams such that during the design, changes can be made based on design team review and consensus.

E.2 Codes and Standards

The project shall be designed to comply with applicable portions of the codes and standards listed in Table E-1 below. The edition of codes shall be the latest edition adopted by the State of California at the time of the project final design. The edition of the referenced standards shall be the latest published edition at the time of the project final design:

Table E-1. Codes and Standards for Structural Design

Reference	Title
ACI 318	Building Code Requirements for Structural Concrete and Commentary
ACI 350	Code Requirements for Environmental Engineering Concrete Structures and Commentary
ACI 350.1	Specification for Tightness Testing of Environmental Engineering Concrete Containment Structures and Commentary
ACI 350.3	Seismic Design of Liquid-Containing Concrete Structures and Commentary
ACI 530	Building Code Requirements for Masonry Structures
AISC 341	Seismic Provisions for Structural Steel Buildings
AISC 360	Specification for Structural Steel Buildings
AISC Manual of Steel Construction	
ASCE 7	Minimum Design Loads for Buildings and Other Structures
Aluminum Association - Aluminum Design Manual	
AASHTO	American Association of State Highway and Transportation Officials - Standard Specifications for Highway Bridges
CMAA	Crane Manufacturers Association of America - Specifications No. 70 and 74 for Cranes
AWS - D1.1	American Welding Society - Structural Welding Code
CBC	California Building Code, with local amendments

Table E-1. Codes and Standards for Structural Design	
Reference	Title
OSHA	Code of Federal Regulations, 24 CFR Part 1910, Occupational Safety and Health Administration Standards, with local amendments
All applicable state and local codes	

E.3 General Service Loads

E.3.1 Dead Loads

Dead loads shall consist of the weight of the structure and all equipment of a permanent or semi-permanent nature including but not limited to pumps, cranes, and HVAC equipment. A superimposed dead load of 20 pounds per square foot (PSF) shall be included in the design of floors and roof structures to account for HVAC ductwork, piping, electrical wiring and lighting. Partition loading allowance shall be computed on the basis of materials used.

Minimum live loads shall be as stated in the CBC, except as stated in Table E-2 below:

Table E-2. Minimum Live Loads by Location	
Location	Live Load
Process Areas	Equipment + 50 PSF or 200 PSF minimum or maximum fork lift wheel loads, whichever governs
Mechanical Rooms	150 PSF and 2,000 pounds concentrated load
Electrical/Control Rooms	300 PSF
Storage Areas	250 PSF
Corridors, lobbies, stairways	100 PSF
Catwalks, platforms for access only	100 PSF
Slab-on-grade (vehicle area)	250 PSF
Deck-at-grade (vehicle area)	HS-20 loading or applicable crane/vehicle loading
Building Roof	20 PSF + Equipment Load or 50 PSF, whichever governs
Grating, checkered plate, and hatches	125 PSF or same as adjacent area, whichever is greater

E.3.2 Crane and Monorail Loads:

Design of crane girders or runway beams, monorail beam and supports will be in accordance with CMAA Specifications No. 70 & 74, and AISC Manual of Steel Construction.

E.3.2.1 Lift operation:

- Impact for crane: 25 percent of lift load and trolley/bridge weight
- Impact for monorail: 50 percent of lift load and trolley/bridge weight.
- Lateral force: 20 percent of lift load and trolley/bridge weight.
- Longitudinal force: 10 percent of lift load and trolley/bridge weight.

E.3.2.2 Limitation on deflection:

- Maximum crane girder (not including impact load): L/1000
- Maximum monorail beam (not including impact): L/1000
- Maximum crane girder or monorail beam horizontal deflection (not including impact): L/400
- Where L= span length
- Centrifugal force and torsion shall be considered on curve track.

E.3.3 Heavy Equipment Loads

In areas subject to heavy equipment traffic, the structures shall be capable of supporting existing and planned vehicle loads including impact such as forklifts, maintenance vehicles, mobile cranes, etc. Consideration shall be given for moving, stationary, and operational loads (such as crane setup to lift equipment loads), including expected Contractor's equipment to be used during construction.

All equipment gallery floors, ground level floors with large access doors shall be designed for forklift loads or any anticipated maintenance vehicle loads.

The design engineer shall coordinate with the SVCW Mechanical Maintenance group to obtain information regarding typical vehicle and forklift used at the facilities.

E.3.4 Differential Settlement Loads

For backfilled foundations, the structure shall be checked for a minimum 1/4 inch differential settlement over 20 feet, or as recommended by the geotechnical engineer.

E.3.5 Mechanical Vibration Control

Critical dynamic response of framing supporting vibrating machinery shall be at least fifty percent out of phase with the disturbing force.

E.4 Seismic Loads

Seismic loads and design requirements shall conform to the CBC and the ASCE 7.

- The Seismic Design Category = D, per CBC Section 1613.5.6.
- The SVCW pump stations are considered "Essential Facilities", Risk Category IV.
- Importance Factor (I) = 1.5.
- Seismic loads due to earth pressure shall be specified in the project specific geotechnical report.
- Hydropneumatic tanks and small storage tanks shall be designed using the inertia forces from the weight of the tank and its contents.

E.5 Wind Loads

Wind loads and design requirements shall conform to the CBC.

- The pump stations are considered an "Essential Facility" Risk Category IV.
- The SVCW pump stations are located in basic wind speed zone of 115 mph per ASCE7-10.
- The Pump Stations are located in Exposure Category C.
- The Topographic Factor (K_{zt}) = 1.0.

E.6 Soil Information

A Predesign Geotechnical Data Report (GDR) by Jacobs Associates and a subsequent Predesign Geotechnical Interpretive Report (GIR) by DCM Consulting, Inc. were prepared for the project. The design engineer shall be responsible for establishing the actual scope of work for the final GDR and GIR. The GIR shall address all of the information needed for compliance with codes, structural design, buried piping, roads, walkways, and other design elements. The GIR provides information for specific construction concerns related to the integrity of sewers, pavement and structures. Recommendations for use in design include:

- Recommendations for type and depth of foundation. Include alternate systems such as piles or other deep foundation system where required.
- Allowable soil bearing pressures for spread footings – Dead Loads, Dead Loads + Live Loads, Dead Loads + Live Loads + short duration loads such as Wind and Earthquakes.
- Mat foundations: allowable bearing pressures, modulus of subgrade reaction, maximum differential settlement.
- Settlement potential, including total and differential settlement estimates. Differential settlement shall be given for a specific distance.
- Allowable lateral earth pressures – Active, at-rest, passive.
- Surcharge loading – Construction, traffic.
- Friction factors – Soil to concrete base, soil to concrete wall, angle of internal friction.
- Seismic earth pressures and parameters.
- Potential geologic and seismic hazards such as ground shaking, liquefaction potential, and liquefaction induced settlement.
- Groundwater table elevation. If groundwater table is expected to be high, a pumping test shall be required to determine dewatering parameters for inclusion in the specifications.
- Buried structures shall be checked for adequacy for buoyant forces. Minimum safety factor against buoyancy shall be 1.5 for normal ground water elevation, and 1.1 for flooding water elevation.
- Describe and categorize soil types and soil excavation, identify location of hard and stiff soils, evaluate on-site soil backfill suitability, provide backfill compaction criteria and pipe bedding requirements, provide trench shoring requirements.
- Provide recommendations for excavations: Sloped excavations using sheeting and shoring, and recommendations for excavations adjacent to existing structures.

- Address in detail the excavation impact of the proposed work on all existing utility trenches in the vicinity of the proposed project. Evaluate the potential collapse of the earth prism located between existing parallel utilities and the trench excavated for any proposed utility installation.
- Evaluate soil contamination and identify potential for off-site disposal requirements and locations.

E.7 Liquid Loads

A unit weight of 65 pounds per cubic foot (pcf) will be used for the design of structural elements in contact with liquid. The maximum operating fluid level will be used for the static load case. Environmental durability factors in accordance with ACI 350 for a severe environmental exposure will be applied to fluid loads for the static load case. In addition to the static load case, maximum fluid level to the top of an open containment or to the maximum level possible due to overflow will be used for the overflow case. Environmental durability factors will not be applied to the overflow loading condition. Increased liquid pressures due to seismic hydrodynamic effect will be considered in the design assuming a water level at the maximum operating fluid level.

E.8 Load Combinations

The above loads will be combined in accordance with Section 1605 of the CBC for non liquid containing structures. For liquid containing structures, the above loads will be combined in accordance with ACI 350, Section 9.2.1. An environmental durability factor will be applied to load combinations for liquid containing structures as required by Section 9.2.6 of ACI 350.

The design should account for at least two basic soil loading conditions. The first condition to account for is when the tank is empty and the hydrostatic load is not available to counteract the soil pressures. The second condition to account for is when the tank is full to the normal operating level and there is no soil backfill to counteract the hydrostatic pressures. This condition represents the basin during the water tightness test when the tank is filled, but not backfilled.

Vehicular access will be provided to the top of any basin that exceeds 100 feet in any principal direction for removal and maintenance of equipment.

E.9 Structural Systems

Structures should be designed with appropriate and adequate vertical and lateral load resisting systems. A description of the structural lateral load resisting systems shall be provided in the structural calculations and on the drawings.

E.10 Materials – General

General specifications for construction materials shall be as specified in the applicable project technical specifications.

The following is a list of guidelines to be used with the specific materials.

E.10.1 Concrete

All construction and expansion joints shall be shown on the contract drawings. Construction joints shall be placed at points of least shear in the element. The distance between construction joints

shall not be more that 40 feet. All construction and expansion joints in liquid-containing structures shall be provided with waterstops.

Minimum shrinkage reinforcing shall comply with ACI 350. Contraction joints will not be considered as a “movement joint”. Only full expansion joints will be considered as a “movement joint” to reduce the minimum shrinkage and temperature reinforcement.

For the purpose of determining the maximum allowable stresses of the flexural reinforcement in accordance with ACI 350, all environmental exposures should be assumed to be “severe”.

Interior surface of the wet-wells fillets shall be provided at wall to floor joints to prevent debris accumulation.

Reinforcing steel shall conform to ASTM A615 or ASTM A706, Grade 60.

Below grade and liquid-containing concrete structures shall be designed to conform to ACI 350. Special attention shall be taken with the performance specifications for concrete for obtaining durable, low shrinkage, concrete mix designs.

Interior surfaces of wet-wells exposed to raw sewage or sewer gas shall be protected by a lining system such as PVC or HDPE. Concrete structures that are protected with a lining system shall have seams located at least 12 inches away from 90-degree corners.

E.10.2 Masonry

Reinforced masonry shall be designed in accordance with Chapter 21 of the CBC and ACI 530.

Masonry structures shall be designed using a specified compressive strength (f’m) of 1,500 psi. Higher compressive strengths require more expensive prism testing and more comprehensive special inspection program.

All reinforced masonry construction requires special inspection.

E.10.3 Structural Steel

All structural steel members and connections shall be designed and detailed in accordance with AISC Specification for Building Structures. The design of structural connections shall not be left to the detailed shop drawings.

All structural steel connections shall be made with high strength bolts conforming to ASTM A325 Type N, bearing type connections with threads excluded from the shear plane, unless otherwise required by the design. The use of machine bolts shall be limited to non-structural applications.

All steel welding qualification and workmanship shall be in accordance with AWS.

Wide Flange shapes shall conform to ASTM A992, Grade 50.

Hollow Structural Sections (HSS) shall conform to ASTM A500, Grade B.

Structural Steel Pipe shall conform to ASTM A53, Grade B.

E.10.4 Stainless Steel

Type 316 stainless steel bars, shapes, plates, fasteners, and anchor bolts shall be used in corrosive damp or submerged areas for long life and low maintenance. For motor control centers (MCCs) Type 316 Stainless (a Molybdenum containing grade) shall be used.

E.10.5 Aluminum

Aluminum shall not be used without specific approval by SVCW.

Aluminum shall be selectively used for miscellaneous structural support systems, walkway grating and diamond plate, hand railing and guard railing, and at cover plates used for odor control. Severe corrosion conditions shall be considered before specifying aluminum.

Aluminum alloy for structural shapes, bars, plates, and sheets shall be 6061-T6.

Bolts and fasteners for aluminum fabrication shall be Type 316 or Type 304 stainless steel.

E.10.6 Fiberglass Reinforced Plastic

Fiberglass reinforced plastic (FRP) or reinforced thermoset polyester (RTP) shall not be used without specific approval by SVCW.

FRP or RTP shall be selectively used for grating, guardrail, and cover plates in corrosive areas, explosive environments, or electrical areas.

A responsible party specializing in fiberglass design shall design FRP or RTP structural elements.

FRP and RTP products shall be manufactured using pultruded process utilizing either flame retardant isotropic polyester or a flame-retardant vinyl ester resin containing an ultra-violet (UV) inhibitor.

E.10.7 Wood

The use of wood construction in permanent structures shall be limited to nonstructural applications such as nailers, cabinetry, etc.

E.11 Seismic Bracing

Seismic bracing shall be included in the design for pipes larger than 12-inches, HVAC, electrical conduits, and light fixtures.

Seismic bracing for pipes larger than 12-inches, non-standard bracing systems for critical equipment, or where the location of the seismic bracing is critical, shall be located on the contract documents.

E.12 Design Loads on Drawings

In order to furnish information for future use, all live loads used in the design of a structure shall be listed under the general notes on the standard structural drawings.

For loadings that do not comply with the general notes, loading information shall be shown and noted on the plan of the area being designed for the special loads.

E.13 Serviceability

Structural systems and members shall be designed to have adequate stiffness to limit deflection and lateral drift. The deflection of structural members over span, shall not exceed that permitted by the Table E-3 below.

Table E-3. Deflection of Structural Members Over Span	
Element	Deflection
Steel Floor Plates and Gratings	L/240 Live Load
Beams, Lintels, or Slabs Supporting Masonry	L/720 (3/8 inch maximum for lintels above windows) total load
Roof without Ceilings Roof with Ceilings	L/240 Live Load, L/180 Total Load L/360 Live Load, L/240 Total Load
For metal roof decks without built-up roofing or ceilings	L/180LiveLoad
Floors	L/360LiveLoad,L/240TotalLoad
Steel	RefertoAISC360.
Concrete	RefertoACI318andACI350.

E.14 Special Inspection

Designers shall specify on the structural drawings where special inspections per the CBC are required.

At SVCW, special inspection will typically be required for foundation subgrade preparation, deep foundation systems, reinforcing steel placement for concrete structures, concrete placement, structural steel welding, structural steel connections, reinforced masonry, and post-installed anchor bolts.

Where special inspections are required, the designer shall develop a procedure for the special inspector to follow. The procedure shall include a narrative description of duties, forms, checklists, and any other measures to verify compliance with special inspection requirements. These procedures shall be discussed with the construction manager prior to construction.

E.15 Condition Assessment and Seismic Evaluation of Existing Facilities

The design engineer shall conduct a thorough condition assessment and seismic evaluation of the existing facilities that will need to be modified to accommodate the proposed improvements. The seismic evaluation shall be based on the latest American Society of Civil Engineers (ASCE/SEI) 31-Seismic Evaluation of Existing Buildings. The seismicity level and performance level shall be determined between the Design engineer and SVCW. Structures housing emergency equipment required for the operation of the facilities shall be evaluated for the Immediate Occupancy Performance Level.

E.16 Seismic Rehabilitation of Existing Facilities

If the seismic evaluation of the existing facilities reveals that the structure(s) require rehabilitation then the structure(s) shall be retrofitted based on the latest American Society of Civil Engineers (ASCE/SEI) 41- Seismic Rehabilitation of Existing Buildings.

E.17 Standard Details

Standard details are included in Attachment N.

F. ATTACHMENT

Process and Instrumentation Diagram Requirements

The purpose of this document is to guide the pump station final design teams and to ensure consistent quality and similar facilities for ease of operation and maintenance. This document is meant to be a working document for the design teams such that during the design, changes can be made based on design team review and consensus.

Process and instrumentation diagrams (P&IDs) provide a schematic representation of process piping, equipment, instrumentation and connections to the area, the Programmable Logic Controllers (PLCs) and the main Supervisory Control and Data Acquisition (SCADA) System. P&IDs shall follow the International Society of Automation (ISA) standards and the latest SVCW Automation Standards.

Example P&IDs are shown in the Pre-Design Drawings. Lines and symbols used on the P&IDS are shown on the Instrumentation Symbol Sheet in the SVCW CAD Standards Design Production Standard (DPS) 5.0 (SVCW's CAD Standards).

The P&IDs shall be divided into three distinct sections with a dividing line between each section:

1. **Field.** This section of the P&IDs includes equipment and instrumentation located at the pump station sites and is located at the base of the sheet. Major equipment is identified with an equipment number and common name at the bottom of the diagram. Local control panels are also located within the field section.
2. **Motor Control Center (MCC).** MCCs for motor-operated equipment shall be located in the MCC section. MCCs typically include motor circuit breakers, variable frequency drives, programmable controllers, and metering. This section is located between the Field and PLC sections. In some cases, there are no MCCs present; therefore, the MCC section may be eliminated if unnecessary.
3. **PLC.** SCADA tag naming, descriptions, and equipment input/output (I/O) are located in the PLC section. This section is located at the top of each sheet. SCADA tag naming and description conventions shall be per the latest SVCW Equipment & Tag Naming Documents. Standard equipment I/O conventions shall be per latest SVCW Equipment & Tag Naming Documents. In the PLC section, the Control Panel shall be named and numbered in the top left corner of the P&ID drawing.

Process flow on each diagram shall be from left to right. Sheet references to areas that flow into the process area shall be located on the left edge of the field section. Page references to which the process area continues on to are located on the right side of the field section.

Additional project-specific considerations that apply to the P&IDs include instrument identifiers, panel indicators, and SCADA I/O Tag Names. Instrument Identifier Bubble and Panel Indicator Bubble conventions and SCADA I/O Tag Names standards shall be labeled and displayed using the following criteria.

1. **Instrument Identifier Bubbles.** Each instrument bubble will need to include the full instrument name. For example:

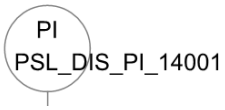

2. **Panel Indicator Bubbles.** Equipment numbers shall not be included in the panel indicator bubbles because there is insufficient physical space on the drawing to add the complete tag name. For example:

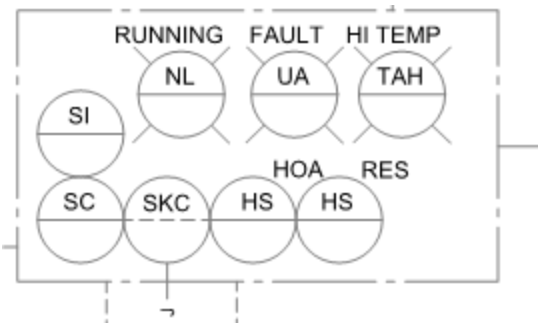

3. **SCADA I/O Tag Names.** Only the tag shall be shown in the PLC Section of the P&IDs. The tag shall use the Equipment Tag Name, with the appropriate I/O suffix as defined in Table 7-3 of the SBSA's Automation Standards (latest revision, March 2012). Additional I/O suffixes that are not specifically included in Table 7-3 shall be coordinated with SVCW. An example of the SCADA I/O Tag Names is displayed below.

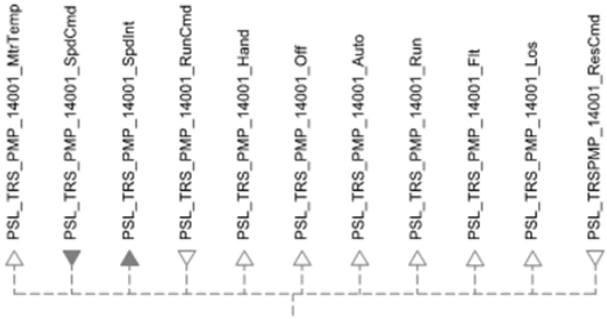

G. ATTACHMENT

Mechanical Design

This section outlines the parameters which shall form the basis of the SVCW Pump Station Design Project mechanical design.

G.1 Purpose

The purpose of this document is to guide the pump station final design teams and to ensure consistent quality and similar facilities for ease of operation and maintenance. This document is meant to be a working document for the design teams such that during the design, changes can be made based on design team review and consensus.

G.2 Codes and Standards

Mechanical equipment and piping systems shall be designed and built to the following codes and standards:

1. Local respective ordinances (City of Menlo Park, Belmont, San Carlos, Redwood City, and San Mateo County).
2. California Building Standards Code (CBC), latest Code edition adopted by the State of California at the time of design.
3. Underwriters Laboratories Inc. (UL) standards.
4. U.S. Department of Labor Occupational Safety and Health Act (OSHA).
5. National Fire Protection Association (NFPA) codes and standards.
6. Metal Framing Manufacturers Association (MFMA) standards.
7. American Iron and Steel Institute (AISI) standards.
8. American Institute of Steel Construction (AISC) standards.
9. American Bearing Manufacturers Association (ABMA) standards.
10. American Society for Testing and Materials (ASTM) standards.
11. American Society of Mechanical Engineers, Boiler and Pressure Vessel (ASME B&PV) Code.
12. American National Standards Institute (ANSI) standards.
13. Manufacturers Standardization Society of the Valve and Fittings Industry (MSS) standards.
14. Expansion Joint Manufacturers Association (EJMA) standards.
15. American Water Works Association (AWWA) standards.
16. Hydraulic Institute (HI) standards.

G.3 Pump Equipment

Pump equipment needs to conform to the requirements and objectives of paragraph 6.1, ANSI/API 610. Components associated with the rotating elements in the drive train, including equipment supports and supports for rotating elements, shall be selected and designed to function without damage or disassembly at reverse rotational speeds up to 150 percent of maximum operational speed during flow reversals through the pump. The complete pumping unit shall operate without overload on any component at any point along the pump's entire full-speed operating curve. Pumps required by virtue of the operating conditions to operate against a closed valve or throttled for any period of time exceeding five seconds shall be designed with drivers sized to operate continuously at the power requirement for that condition even though the power requirements at the rated condition may be less.

G.3.1 Pump Selection

Selected pumps shall be proven designs that shall have been in service under similar conditions of service with no objectionable performance characteristics for a period of not less than five years. A list of similar pump installations to the selected pumps shall be provided to SVCW for performance verification. Listed pump shall be of the same size volute or bowl, discharge case and nozzle size, impeller design (including number of vanes) and shall be operating under similar conditions of pumped fluid, head, capacity, speed, rotation, and Net Positive Suction Head Available (NPSHA).

If these above conditions cannot be met, other pumps can be selected under the following conditions:

a. The proposed design has been in successful operation under similar conditions of volute or bowl, discharge case and nozzle size, impeller design (including number of vanes), pumped fluid, head, capacity, rotation and NPSHA, but at a higher speed for a period of not less than three years;

or

b. The proposed design has been in operation in designs where both larger and smaller nozzle size pumps have been in service for a period of not less than five years, and impeller design (including number of vanes), pumped fluid, head, capacity, speed and NPSHA are similar to that for the proposed installation. Under no circumstances shall an existing pump design operating at a higher speed than those currently in service in similar applications be considered.

Pumps that qualify under either exception (a. or b.) shall be demonstrated, by operation of a test pump in a fully equipped hydraulic test facility, to have acceptable operating characteristics under the conditions identified for the proposed installation of the proposed pump in the size and at the speed proposed, with the proposed impeller design. The test pump shall be set up and a witnessed demonstration shall be performed prior to designing, fabrication and testing any of the equipment proposed for the specific installation. Testing shall be included in project bid if required.

G.3.1.1 General Performance Criteria

Pumps shall be designed to operate without loss of head due to cavitation or vibration over the entire specified range of flow and head conditions and shall be specifically selected for NPSH margin requirements detailed in Section G.3.6

G.3.1.2 General Design Criteria

All pumps shall be designed in accordance with applicable portions of ANSI/HI 1.1 – 1.4, 2.1 – 2.4 and ANSI/HI 9.6.2 – 9.6.6. The pumps shall be specifically designed to pump the raw wastewater and shall operate without clogging or fouling caused by material in the pumped fluid at any operating condition within the range of service per the pump's non-clog size rating.

Pump head capacity curves shall slope in one continuous curve within the identified operating conditions. No points of reverse slope inflection capable of causing unstable operation shall be permitted within the specified zone of continuous duty operation. Pumps with head/capacity curves with a reverse inflection are specifically prohibited if these characteristics shall cause unstable operation within the specified range of operating conditions and where startup/shutdown conditions entail operation against a slow opening/closing valve.

Pumps shall have bells selected to provide an intake velocity of not less than 3.5 feet/second nor more than 4.0 feet/second when operating at the maximum specified flow or the flow resulting from the lowest specified operating head at maximum speed, whichever is the greatest ("peak flow").

Pumps specified to operate at variable speed shall function without loss of head due to cavitation or excessive vibration over the entire specified range of flow and head conditions defined by the region bounded by Condition Points A, B and C and any other continuous duty operating condition. Acceptance criteria shall include the following:

a. Operating Condition Points B and C shall reside within the region defined by the PACL limits set forth in this section for the proposed pump selection, based upon the pump's suction specific speed.

b. No more than 10 percent of the region noted above shall reside outside the PACL limits set forth in this section for the proposed pump selection, based upon the pump's suction specific speed. Operating Condition A may reside in the area outside the PACL.

Pumps shall be shall be specifically selected for NPSH margin requirements detailed in Section G.3.6. Pump selections which do not provide the specified margin shall be rejected.

G.3.1.3 PACL

Pump selection for a given application shall be predicated on locating the specified most frequent operating condition(s) in the PACL. These points shall always include Condition Points A and B and additionally shall include any other Condition Points indicated as continuous duty conditions, or any additionally specified for inclusion in the PACL. Condition Point A shall be the pump's rated condition and shall be guaranteed to meet both specified head and flow within the limit established in ANSI/HI 14.6, acceptance grade 1U.

A given pump's PACL shall be determined as a percentage of Best Efficiency Flow (BEPQ) at the given speed, the pump's suction specific speed as determined in accordance with ANSI/HI 1.3, paragraph 1.3.2.2 and the relationships presented in the Table G-1 below.

Table G-1. Limiting Flow, per cent Best Efficiency Point Flow (BEPQ)[1]				
Suction Specific Speed, less than but not greater than:	Clear Liquid pumps, minimum limit	Clear Liquid Pumps, maximum limit	Solids Bearing Liquids Pumps, minimum limit	Solids Bearing Liquids Pumps, maximum limit
7000	50	125	70	125
8000	57	122	75	122
9000	60	120	80	120
10000	65	120	83	117
11000	68	110	85	112
12000	72	112	88	110
13000	78	110	91	110

[1]*Straight line interpolation may be used for intermediate values of suction specific speed*

Exceptions to the foregoing shall be considered only when certified test data demonstrating conclusively a wider region of stable pump performance can be provided. The test data shall include suction pressure pulse information as well as actual service information for the same impeller design and trim, operating at the same speed, capacities and head for the same size pump as required for the specified application.

G.3.2 Critical Speeds and Natural Frequencies

Critical speed and natural frequency data submittal requirements depend upon the pump.

G.3.2.1 Lateral Rotor Dynamics

The complete pumping unit, including all related frames, supports, enclosures, and casings, shall be free from dangerous critical speeds from 20 percent below to 30 percent above the operating speeds required to achieve the specified performance characteristics. The logarithmic decrement for each damped natural frequency (forward or backward) shall be greater than +0.3, and the amplitude magnification factor shall not exceed 3, for any natural frequency within this range.

Process sensitivities are such that operation at infinitely variable speed within the specified operational conditions is an absolute requirement. Any remedy imposing a locked-out speed interval or intervals shall not be considered an acceptable remedy for identified critical speeds. Acceptable remedies include combinations of adjustments in rotor geometry or materials, and the substitution of energy absorbing couplings. Other remedies may be considered so long as they are justified in writing and the proposal sealed and signed by the design professional retained by the manufacturer to perform the system mass elastic system analyses.

G.3.2.2 Torsional and Combined Shaft Stress

For constant torque applications, the pump rotor shall be free from torsional response which produces combined (steady plus alternating torque induced) stresses exceeding 30 percent of the material's elastic limit (but no more than 18 percent of the material's ultimate tensile strength) at

any speed from 10 percent below to 20 percent above that required by the specified operating conditions, or during startup, shutdown or motor control transients.

G.3.3 Impeller Clearances, Vane Passing Frequency and Impeller Keyways

The radial clearance between the tip of the impeller vane and diffuser or volute vanes shall be not less than 3 percent and 6 percent, respectively, of impeller diameter. The ratio of liquid channel widths (diffuser or volute/impeller) shall be not less than 1.4 nor more than 1.5 for volute-type pumps. The pump shall be designed so that internal geometry shall not cause uneven flow distribution at impeller vane inlets.

G.3.4 Component Design Criteria

Combined stresses in steel frames and supports shall not exceed those permitted by the AISC Manual of Practice. Combined stresses in cast, forged, rolled, or fabricated pressure retaining components, frames and supports shall not exceed that allowed for the given material in Section VIII, Division 1 of the ASME Code. Design pressures for pressure-retaining parts shall be not less than twice the pump's shutoff head at the manufacturer's listed maximum operating speed. Pump casing strain at any head on the full speed operating curve (including allowances for increases caused by specified multi-stage applications) shall not result in distortions at the bearing housings greater than the maximum allowable by the bearing manufacturer to provide the specified bearing life.

The term "combined stresses" in this section shall mean the sum of all operating stresses, including stresses induced by dynamic and static forces as developed via the analysis procedures stipulated in this section. Static forces (x, y, z, and moments in all planes) shall include the relevant maximum nozzle loads specified in ANSI/HI 9.6.2 or as stipulated by the pump manufacturer. Dynamic forces shall include both steady state and transient stresses induced by operating conditions within the zone of operation established by the specified operating conditions.

G.3.5 Torsional and Combined Shaft Stresses

Shaft stresses shall be calculated using the following equation and the stress concentration factors in Table G-2 below.

Where:

S	=	stress, psi
Scf	=	stress concentration factor, dimensionless
D	=	minimum shaft diameter at point of concentration, inches
$\Delta\Theta$	=	twist in shaft between adjacent masses, radians
L	=	effective length between masses, inches
G	=	shear modulus of shaft material, PSF

The Scf, to be applied at all the roots of all keyways and changes in shaft diameter shall be as follows:

Table G-2. Stress Concentration Factors	
S_{cf}	Ratio of fillet radius to shaft diameter
4.3	0.0025
3.7	0.01
3.05	0.02
2.75	0.03
2.6	0.04
2.55	0.05 and greater

Values of Scf between data points in the table above shall be based upon a straight line interpolation.

G.3.5.1 Shaft Deflection

Pump shafts on volute type pumps shall be designed to provide sufficient stiffness to operate without distortion or damaging vibration throughout the range of service specified. Shaft deflection at the face (impeller side) of the shaft seal shall be limited to no more than 1.5 mils at any operating condition within the zone described by the specified continuous duty operating conditions. Calculation of radial thrust loads shall be performed in accordance with the methodology set forth in ANSI/HI 1.3, paragraph 1.3.5.1. Shaft deflection calculations shall be performed in accordance with ANSI/HI 1.3.5.4. Shaft deflection criteria and limits shall be as required by API 610 (ISO 13709).

G.3.5.2 Bearings

Anti-friction bearings for pumps shall be selected for a minimum L–10 life of 50,000 hours in accordance with ABMA 9 or 11. Bearings shall be heavy-duty, oil lubricated or permanently greased lubricated anti-friction type double shielded and factory sealed. Bearings for other elements in the rotating system such as motors shall be selected using the same criteria as specified for the pump. Bearing selection shall be based upon the worst combination of continuous duty operating conditions specified and shall include both steady state and transient loads.

G.3.6 Net Positive Suction Head Margin Limitations

Net Positive Suction Head Required - 3 Percent Reduction (NPSH3) characteristics for the candidate pump shall be based upon documented test data not more than five years old, performed on a pump not more than two nominal pump diameters larger or smaller than the proposed pump with an impeller of the same geometry as that proposed for the pump to be used for the subject application, and operating at the same speed as the pump for the proposed application.

The Net Positive Suction Head Available (NPSHA) information for anticipated operating conditions for each application shall be generally referenced to a specific elevation, stated in terms of project datum. The pump manufacturer shall adjust the NPSHA information to the elevation of the pump impeller eye for the specific pump model and size proposed for the application. NPSH3, as used in

the following paragraphs, shall mean the NPSH3 at the impeller eye, determined in accordance with ANSI/HI 11.6 or 14.6, as applicable for the proposed pump.

Pumps classified as centrifugal pumps under ANSI/HI 1.1 – 1.2 with suction specific speeds less than 8500 with cast duplex stainless steel impellers, a minimum NPSHA/NPSH3 margin ratio of 1.1 shall apply to pumps at any operating condition within 85 percent and 115 percent of best efficiency capacity. The minimum acceptable NPSH margin ratio at any other location on the pump's head/capacity curve shall be 1.2.

Pumps with suction specific speeds greater than the above limitations shall have NPSH margins of 1.5 and 2 applicable to the capacity envelope limitations defined previously. Under no circumstances shall the absolute value of the margin above NPSH3 be less than 3.5 feet.

Pumps with suction specific speeds greater than the above limitations and pumps with impeller materials that do not meet the requirement for duplex cast stainless steel set forth in this section, and all pumps with suction specific speeds greater than 10,000 shall have NPSH margins not less than 2.5 at operating conditions within ±15 percent of best efficiency capacity and not less than 3.5 for all operating conditions falling outside the ±15 percent of best efficiency capacity envelope. Under no circumstances shall the absolute value of the margin for pumps qualifying with the foregoing restrictions, be less than 3.5 feet greater than NPSH3.

G.3.7 Casing

The volute casing shall be a one-piece casting with a tangential or center discharge nozzle. The cutwater shall be specifically designed for use in fluids with stringy solids and rags. The volute casting shall be specifically designed to bear the loads associated with removal and placement of the pump when submerged or exposed and to withstand the loads imposed. The discharge nozzle shall be reinforced for the loads imposed by the specified conditions of service. The nozzle flange face shall be designed to mate with the discharge fitting. The volute casing shall be drilled and tapped or otherwise fitted with an inlet nozzle.

G.3.8 Shaft

The pump shaft shall be turned, ground and polished, of proportions suitable for use in the specified application. The shaft shall be of sufficient section to limit deflection at the shaft seal to not more than 1.5 mils when the pump is operating at any continuous-duty point. Additionally, under no circumstances shall the distance from the lower bearing and the hub of the impeller exceed two times the diameter of the shaft.

G.3.9 Bearings

Bearings shall be heavy-duty, oil lubricated or permanently greased lubricated anti-friction type double shielded and factory sealed. Bearings shall be designed for an L-10 rating life of at least 50,000 hours at Operating Conditions A, B, or C.

G.3.10 Impeller

The impeller shall be dynamically balanced after trimming to the diameter required by the specified operating conditions, and have a nonclog design capable of passing solids, fibrous materials, heavy sludge, and other matter found in wastewater applications through to the discharge nozzle. Impellers for pumps with discharges 8 inches in diameter and greater shall be not less than two-vane design. Fit between the impeller and the shaft shall be a sliding fit with a taper-lock bushing

pressed by a screw, which is threaded into the end of the shaft, or a slip fit onto the shaft and drive key and fastened to the shaft by an impeller nut having cover for protection from pumped fluid. A wearing ring system designed for abrasion resistance shall provide efficient sealing between the volute and impeller.

G.3.11 Mechanical Seals

The pump shall be provided with a tandem double mechanical seal running in an oil reservoir, composed of two separate lapped face seals. The lower seal unit, between the pump and oil chamber, shall consist of one stationary and one positively driven, rotating tungsten-carbide or ring, with each pair of rings held in contact by a separate spring. The upper seal unit, between the oil sump and the motor housing, shall consist of one stationary tungsten-carbide or silicon-carbide ring and one positively driven silicon-carbide or rotating carbon ring. Ceramic seals will not be acceptable. The seals shall require neither maintenance nor adjustment and shall be easily replaceable. Conventional double mechanical seals with a single or a double spring between the rotating faces, or that require constant differential pressure to effect sealing and are subject to opening and penetration by pumping forces, will not be acceptable. The pump shall be capable of continuous submergence without loss of watertight integrity to a depth of 65 feet.

Each pump shall be provided with a seal lubricant chamber for the shaft sealing system. The seal lubricant chamber shall be designed to assure that an air pocket is provided in the seal lubricant chamber, to absorb the expansion of the seal lubricant due to temperature variations. The drain and inspection plug with positive anti-leak seal shall be easily accessible from the outside.

G.3.12 Motors

The pump motor shall be a squirrel-cage induction, shell type design, housed in an air-filled or an oil-filled, watertight chamber, NEMA B type Inverter Duty with a service factor of 1.15 based upon nameplate rating. The stator winding and stator leads shall be insulated with moisture resistant Class H insulation, which shall be rated at a temperature of 155 degrees C. The motor shall be designed for continuous duty, capable of sustaining a minimum of 12 starts per hour. The temperature rise of the motor shall not be in excess of that specified in NEMA MG-1 for class B insulating materials when operating continuously under load. Motors shall be Factory Mutual or UL listed in accordance with UL 674 and 1207 for Class I, Group D hazardous atmospheres. The junction chamber, containing the terminal board, shall be hermetically sealed from the motor. Connection between the cable conductors and stator leads shall be made with threaded compressed type binding post permanently affixed to a terminal board. The submersible electrical cable shall be of sufficient length to reach the junction box indicated.

The cooling system may be of the oil filled or air filled motor housing type. Thermal sensors shall be provided to monitor stator temperatures. The stator shall be equipped with three thermal sensors, embedded in the end coils of the stator winding (one sensor in each stator phase). These shall be used in conjunction with external motor overload protection and wired to the control panel. The design shall be suitable for continuous motor operation at listed motor rating in 95 degree F water.

The cooling system may rely on radiation of excess heat energy to the fluid in the wet well or, alternatively, the pumped fluid via a closed circuit circulating system utilizing either oil or glycol, or a combination of these. It is specifically required that the cooling system must be compatible with the contemplated control schedule, which may require that the motor case to be exposed continuously or intermittently. Cooling systems shall not employ the pumped fluid to directly cool the motor through wastewater passageways incorporated into the motor shell. It is preferred that the motor be

cooled by the wastewater via fins incorporated into the motor shell. If an internal liquid circulation system is employed for cooling purposes, the liquid shall be glycol or heat transfer oil, which shall in turn circulate a heat exchanger incorporated into the cavity behind the pump impeller.

If the motor is an oil-filled type, it shall be positively cooled by circulating non-toxic oil through the windings to passages within the pump designed as a heat exchanger to transfer heat to the pumped fluid. Vanes cast into the rear impeller shroud shall be provided to circulate pumped flow past a heat exchanger in the shaft seal area to provide the required cooling. Cooling water passages in the motor's shell designed to convey the pumped fluid for cooling purposes are specifically prohibited. The system shall be designed to prevent clogging by virtue of dimensions and configuration and shall be specifically configured to maintain motor temperatures within conservative limits when the pump is operating at variable speed under the operating conditions specified.

Motor bearings shall be protected with bearing isolators. Spacer shafts shall be placed between pumps and motors to allow for the quick and easy removal of backheads and rotors of end suction pumps.

G.3.13 Moisture Detectors

Air-filled motors 10 horsepower and larger and all oil-filled motors shall be provided with an electronic moisture detection system. A primary moisture detector shall be provided between the tandem mechanical seals. A secondary leakage sensor shall be located in the motor housing and shall be specifically designed to detect the presence of water in the motor housing. In addition, motors 15 horsepower and larger shall be fitted with moisture detectors in the cable junction box. All moisture detectors shall be wired to the junction box for connection to the specified monitoring system.

G.3.14 Variable Speed Drive

Each Pump shall be furnished with a variable speed drive. The variable speed drive shall be fully compatible with the characteristics and requirements of the pump motor and vice-versa and shall be furnished by the pump manufacturer.

G.3.15 Cables

1. CABLE: The pump cable(s) provided by the pump manufacturer shall include seven conductors: three conductors for power, two conductors for control, and two ground conductors. The cable design shall be suitable for installation in a municipal wastewater pumping station. The cable length shall not exceed the product manufacturer's recommended length. A cable rack shall be provided and installed in the wet well to neatly store the cable slack when the pumps are in service. The cabling shall be direct connections without the use of any junction boxes.
2. CABLE SEAL: The cable entry water seal design shall preclude specific torque requirements to insure a watertight and submersible seal. The cable entry shall be comprised of individual cylindrical elastomer clamps having a close tolerance fit against the cable conductor insulation and the entry inside diameter and compressed by the entry body containing a strain relief function, separate from the function of sealing the cable. The cable entry junction chamber and motor shall be separated by a stator lead sealing gland, potting chamber or terminal board, which shall isolate the motor interior from foreign material gaining access through the pump top. If a potting chamber is used, the potting procedure shall employ an epoxy-potting compound combined with a procedure that insures

penetration of the compound into the individual cable conductor strands to prevent development of wicking pathways for entrance of water into the motor.

3. CABLE DISCONNECTION: The pump shall be designed such that power/ control cable can be removed from the pump motor without breaking the cable seal. The power/ control cable shall be sealed to a removable motor chamber cap that shall be universally mateable to the same manufacturer's pump series. The pump shall be able to be removed from the wet well and disconnected from the cable by removing the motor chamber cap. A spare removable chamber cap with 15 feet of cable shall be provided.

G.3.16 Junction Boxes

NEMA 7X (stainless steel) junction boxes shall be provided for both motor power and system monitors. Sensor leads shall be provided for termination of the thermal sensor and moisture detectors for connection to the monitoring system indicated. The sensor junction box shall be separate from that shown for motor power.

G.3.17 Inlet Nozzle

The wet well design has been developed on the basis of a limiting velocity at the pump inlet of 4 feet per second and a confined inlet designed for cleaning by operating the pump until it breaks suction. Inlet nozzles are required for all pumps with entrance velocities exceeding this limitation. If a nozzle is required, the pump casing shall be drilled and tapped to receive an inlet nozzle and bell fitting to extend the pump inlet connection into the confines of the wet well or sump to achieve the floor separation required by the Hydraulic Institute Intake Standard (ANSI/HI 9.8). The inlet nozzle may be of commercially available forged steel fittings or cast iron and shall have a smooth, flared transition from a bell fitting at the entrance to the nozzle and a smooth, direct entry to the connection at the impeller inlet. The final configuration of the inlet bell and nozzle shall be selected to efficiently convey the pumped fluid into the impeller eye.

G.3.18 Pump Discharge Connection Seal

The connection between the pump discharge connections shall be fitted with a replaceable dynamic sealing feature to affect a complete closure between the pump discharge flange and the mating connection on the anchor fitting. The dynamic seal shall function to effect a water tight connection as further defined in this paragraph. Leakage through the seal shall not exceed 1.5 percent of the flow specified for Condition Point A when operating at pump shutoff head and not more than 1 percent of total pump flow at Condition Point B.

The dynamic seal shall affect a seal meeting the requirements of this paragraph using the head developed by the pump when in operation to expand the sealing device, which may be of metallic or elastomeric construction, against the inner contours of the discharge fitting. The design of the seal shall incorporate features to protect the integrity of the seal during the pump removal/setting process. The seal shall be attached to the pump side of the pump/anchor connection and shall be easily replaceable.

G.3.19 Pump Anchorage, Guide System and Access Cover

The pump shall be provided with a guide system to allow easy removal of the pump without entering the wet well. The dry weather pump guide rail system may be of either the single or dual rail type. The wet weather pump guide rail system shall be of the dual rail type. The discharge connection shall

be bolted to the structure as indicated and shall serve as a lower attachment for the guide rails. The discharge connection shall be either horizontal or elbow discharge type, as indicated.

The pump and guide rail system shall be designed to automatically connect the pump to the discharge piping when lowered into place on the discharge connection. The design shall be non-sparking and shall conform to UL requirements for installation in a location classified in accordance with NFPA 70, Article 500 for Class 1, Group D, Division 1 locations. The pump shall be easily removable for inspection or service, requiring no bolts, nuts, or other fastenings to be removed for this purpose, and no need for personnel to enter the pump wet well or sump. Sealing of the pumping unit to the discharge connection shall be accomplished by a simple linear downward motion of the pump with the entire weight of the pumping unit guided to and pressing tightly against the discharge connections. No portion of the pump shall bear directly on the floor of the sump and no rotary motion of the pump shall be required for sealing. Guide bars provided for directing the pump into position or for removing the pump for maintenance shall steer the pump into proper contact with the discharge elbow. Once the pump has been positioned on its support fitting at the discharge fitting, the guide bar system shall not be required for pump support.

Unless otherwise specified, pumps installed in structures located out of doors shall be provided with a hinged access cover with frame cast into the top slab. Cover shall be aluminum with a skidproof design, furnished with a flush locking mechanism and shall be designed to support a uniform live load of 125 pounds per square foot with a safety factor of three. The doors shall be provided with stainless steel hinges and lifting handle shall open to 90 degrees and lock automatically in that position. The frame shall include upper attachments for the guide rails and attachments for the lifting chain and power cable. Access frames and covers shall be sized as specified. Hardware and miscellaneous attachments shall all be constructed out of ASTM A276, Type 316 stainless steel. Dielectric isolation shall be provided between dissimilar metals.

G.3.20 Spare Parts

At a minimum, the following spare parts shall be provided for each pump:

- 2 sets--all gaskets
- 2 sets--all bearings
- 1 set--mechanical seals
- 2 sets—discharge connection sealing devices

Additional spare parts shall be provided as recommended by the pump manufacturer. Spare parts shall be tagged by project equipment number and identified by part number, equipment manufacturer, and subassembly component (if appropriate).

G.4 Mechanical Equipment

The following describes the general requirements for mechanical equipment.

G.4.1 General

Each item of driven equipment and each motor weighing more than 50 pounds shall be fitted with a minimum of one lifting eye.

G.4.2 Bearings

Equipment bearings shall be oil or grease lubricated ball or roller type designed to withstand the stresses of the service specified.

Oil lubricated bearings shall be equipped with either a pressure lubricating system or a separate oil reservoir type system. Each oil lubrication system shall be of sufficient size to safely absorb the heat energy normally generated in the bearing under a maximum ambient temperature of 60 decrees C and shall be equipped with a filler pipe and an external level indicator gage.

Grease lubricated bearings (except factory sealed and lubricated bearings) shall be fitted with easily accessible grease supply, flush, drain, and relief fittings. Extension tubes shall be used when necessary. Grease supply fittings shall be standard hydraulic alemite type.

Bearings shall be rated in accordance with the latest revisions of American Bearing Manufacturers Association (ABMA) Methods of Evaluation Load Ratings of Ball and Roller Bearings for a minimum L-10 rating life of 50,000 hours as determined using the maximum equipment operating speed.

All bearings accessible to touch and located within 7 feet measured vertically from floor or working level or within 15 inches measured horizontally from stairways, ramps, fixed ladders or other access structures shall either incorporate bearing housings with sufficient cooling to maintain surface temperature at 65 degrees C or less for continuous operation at bearing rated load and a 50 degrees C ambient temperature or appropriate shielding shall be provided that shall prevent inadvertent human contact.

G.4.3 Guards

Guards shall be provided for exposed moving parts which meet OSHA requirements.

Guards shall be fabricated of 14-gage Type 316 stainless steel, 1/2-13-15 expanded metal screen.

Guards shall be modified to meet all equipment manufacturer's specified maintenance requirements (such as preventative or routing maintenance tasks) without disassembly of guards. Lube fittings, for example, shall be extended through guards for easy personnel access.

Piping, manifolds, heaters, and other surfaces having a surface temperature sufficient to burn human tissue (140 degrees F or greater) shall be covered with thermal insulation or guarded. Thermal insulation shall be as described elsewhere in this appendix.

G.4.4 Lubricants

Lubricants shall be of the type recommended by the equipment manufacturer from products of SVCW's current lubricant supplier.

G.4.5 Miscellaneous Items

Caution signs shall be provided for equipment with guarded moving parts which operate automatically or by remote control.

Pressure taps shall be provided on the suction and discharge side of pumps, blowers, and compressors.

Equipment nameplates shall have the equipment name and number engraved or stamped on stainless steel material. All equipment, including valves, shall be provided with nameplates.

A fall prevention system adjacent to the wet wells shall be installed for maintenance technicians to anchor their safety lines during maintenance activities. The fall prevention system shall prevent technicians from falling into open hatches, especially during installation or removal of pumps.

G.4.6 Equipment Mounting

All supports, anchorage, and mounting of all equipment shall be in accordance with the manufacturer's recommendations, the CBC, and industry standard requirements.

All floor-mounted equipment shall be installed on minimum 6-inch reinforced concrete pads. The concrete pads shall be at least 4 inches larger than the equipment base, or as required by the equipment anchor bolt calculations, and shall enclose all conduits, drains, and piping connections.

Equipment baseplate for floor mounted equipment shall be fabricated steel or cast iron, hot-dipped galvanized after fabrication.

Anchor bolts shall be designed for lateral forces for both pullout and shear in accordance with CBC and ASCE 7; the component importance factor (I_P) for all equipment shall be 1.50. Minimum diameter of anchor bolts shall be 1/2 inch. Material for equipment anchor bolts shall be Type 316 stainless steel.

Equipment bases for horizontal pumps shall conform to ANSI/HI 1.3.4, API 610 (paragraph 3.3) and shall provide common support for the pump and motor (and flywheel, if one is specified). Eight positioning jackscrews shall be provided for all drivers and flywheels (if specified) for all horizontal pump baseplates. All bases for horizontal pumps shall be equipped with jackscrews for positioning and leveling the base prior to grouting.

Mounting holes for anchor bolts in the bases shall be drilled (not burned) out and shall not be open slots. All mounting studs shall be Type 316 stainless steel. Anchor bolts shall be Type 316 stainless steel. An anti-seize or anti-galling compound shall be used on all threads.

Equipment bases for vertical volute-type pumps weighing more than 2000 pounds shall be soleplates or leveling boxes under individual feet or support brackets integral with the volute casting. Direct mounting of the volute on housekeeping pads shall not be permitted.

Pumps shall be installed in accordance with ANSI/HI 1.4 and ANSI/HI 2.4. Grouting of equipment bases shall take place prior to connecting any field piping or electrical and instrumentation systems.

Equipment that is not mounted on vibration isolators shall be anchored directly to the supporting floor system. In addition to the anchorage, all such equipment shall be internally designed so that all static and moving parts are anchored to the supporting framework to resist all imposed forces. All forces shall be transmitted to the base in order to be anchored as required.

Connecting piping with flexible connections and/or expansion joints shall be anchored such that the intended uses of these joints are maintained in the piping system without imposing strain on the equipment connections.

All machinery shall be mounted and leveled by millwrights. All equipment bases and equipment shall be leveled against steel surfaces. For equipment with drivers 20 horsepower and greater, periodic special inspection of epoxy grout installation for equipment mounts in accordance with CBC, Section 1705.5.6 shall be performed.

G.4.7 Electric Motors

All motors shall be required to be supplied by the driven equipment supplier.

Electric motors less than 0.5 horsepower (HP) used to drive nonprocess-related equipment shall be specified as open, drip-proof, 1.0 service factor, 115 volts, single-phase, with Class B or F insulation.

Electric motors less than 0.5 HP used to drive process-related equipment or located in an area where washdown occurs or is required shall be specified as totally enclosed, fan-cooled, nonventilated, 1.0 service factor, 115 volts, single-phase, with Class B or F insulation.

Electric motors 0.5 HP through 250 HP used to drive nonprocess-related equipment shall be specified as open, drip-proof, 1.0 service factor, 460 volts, 3 phase, with Class B or F insulation.

Electric motors 0.5 HP through 250 HP used to drive process-related equipment or located in an area where washdown occurs or is required shall be specified as totally enclosed, fan-cooled, 1.15 service factor, 460 volts, 3 phase, Class F insulation with a maximum of 80 degrees C temperature rise. Motors 60 HP and larger shall be specified with overtemperature protection.

Electric motors greater than 250 HP used to drive process-related equipment or located in an area where washdown occurs or is required shall be specified as weather-protected II enclosures, 1.15 service factor, 4000 volts, 3 phase, Class F insulation with a maximum of 80 degrees C temperature rise. Motors shall be specified with resistance temperature detectors.

All electric motors shall be specified with bearings rated for an L-10 life of 100,000 hours.

Electric motors specified for use with variable frequency drives shall be totally enclosed, air-over, blower-cooled with 1.00 service factor, voltage as appropriate, Class F insulation, inverter duty rated and specified with resistance temperature detectors.

Electric motors 15 HP and larger shall be specified with space heater.

Motors weighing more than 50 pounds shall be fitted with at least one lifting eye.

G.4.8 Vibration Isolation

Curb mounted equipment, principally rooftop ventilating equipment, shall be mounted on vibration isolation bases that fit over the curb and under the isolated equipment.

Structural steel bases shall be rectangular in shape for all equipment other than centrifugal pump bases, which may be "T" or "L" shaped. Typical application is centrifugal fans.

Double-deflection neoprene mountings shall have a minimum static deflection of 0.35 inch. All metal surfaces shall be neoprene covered and have friction pads both top and bottom. Typical applications are blowers and floor mounted air handling units (AHU).

Steel members used to cradle machines having legs or bases that do not require a complete supplementary base shall be sufficiently rigid to prevent strains on the equipment. Typical applications are cooling towers and condensing units.

Freestanding, spring-type mountings without housings shall be laterally stable and have neoprene friction pads between the base and support. Typical applications are refrigeration reciprocating compressors and slow speed compressors.

Freestanding, spring-type mountings shall have housings and vertical limit stops when used for equipment exposed to the wind or with operating weight different from installed weight. Typical applications are chillers, boilers, and air cooling towers.

Steel hanger mountings shall contain steel spring and a 0.3-inch deflection neoprene element in series. Principal application is suspended air handling equipment.

Double-deflection sandwich pad mountings shall consist of a high density cork layer permanently bonded to top and bottom layers of corrugated oil-resistant synthetic rubber. Typical applications are centrifugal compressors and vacuum pumps.

Seismic restraints shall meet the requirements of the CBC and ASCE 7; the component importance factor (I_P) for all vibration isolated equipment shall be 1.50.

G.4.9 Noise

The maximum permissible noise levels for a complete piece of mechanical equipment located within or outside a structure shall be coordinated with the local agencies during final design. A complete piece of mechanical equipment is defined as the driver and driven equipment, plus any intermediate couplings, gears, and auxiliaries.

Noise reduction measures such as sound reduction enclosures, acoustical equipment mountings, acoustical wall or ceiling panels, and acoustical insulation on equipment shall be provided where necessary following installed equipment field noise testing.

G.4.10 GATES

Non-rising stems shall be used on gates located beneath roads or drivable surfaces.

G.4.10.1 Sluice Gates

1. Sluice gates shall be heavy-duty, flat-back frame type meeting the requirements of AWWA C501.
2. Materials of construction shall be as follows:

Component	Material
Gate, guide, and frame	ASTM A126, Class B, cast iron
Seating faces	ASTM B103 or B 139, bronze
Wall thimbles	ASTM A126, Class B, cast iron
Stems	ASTM A276, stainless steel, Type 316
Wedges, thrust nut, stem couplings	ASTM B584, bronze, CA872
Fasteners and adjusting hardware	ASTM A276, stainless steel, Type 316, or ASTM F593 and F94, stainless steel, group 1 or group 2
Yoke	ASTM A126, Class B, cast iron
Flush bottom seal	Neoprene
Flush bottom retainer bar	ASTM A276, stainless steel, Type 316

G.4.10.2 Slide Gates

1. Materials of construction shall be as follows:

Component	Material
Frames and slides	ASTM A276, stainless steel, Type 316
Rails and yokes	ASTM A276, stainless steel, Type 316
Fasteners and anchor bolts	ASTM A276, stainless steel, Type 316
Stems	ASTM A276, stainless steel, Type 316
Flush bottom and "J" bulb seals	ASTM D2000, Buna-N or neoprene rubber

G.4.11 Washer Compactor

This section includes design criteria for the equipment used to wash and dewater screenings collected from the municipal wastewater. The units shall vigorously wash, compact, and dewater screenings.

G.4.11.1 Performance Guidelines

Washer compactor systems shall be suitable for installation under the conditions in Table G-3.

Table G-3 . Washer Compactor Criteria

Capacity, FT^3/unit/hr	11
Water supply for Wash Water	Reclaimed for PS2 and PS3 City Potable for PS1
Materials: Screenings washer/compactor components and component housing, plates and sheets	Stainless steel, ASTM A240/A240M, Type 304 ASTM A480/A480M, No. 1 finish for sheets and hot-rolled or cold-rolled, and Annealed or Heat Treated, and Blast Cleaners or Pickled" finish for plates
Support bars, angles, and shapes	Stainless steel, ASTM A276, Type 316 ASTM A484/A484M, Class A finish for shapes

Each unit shall be designed to handle screenings volume based on peak daily flow and maximum screenings quantities. The maximum screenings quantity can be determined using Figure 9.7 from the Design of Municipal Wastewater Treatment Plants, Fourth Edition, Volume 2. The red vertical line indicates screenings quantities based on the bar screen design criteria.

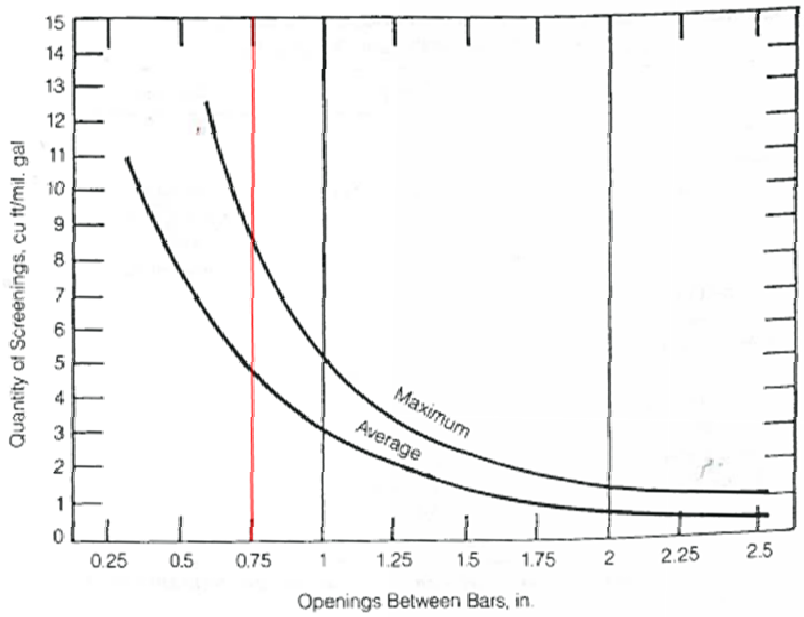

Figure 9.7 **Average and maximum volumes of coarse screenings as a function of openings between bars (cu ft/mil. gal × 0.007 5 = L/m³; in. × 25.4 × mm).**

G.4.11.2 Screening Disposal

Screenings from the washer compactor will fall directly into a roll-off container sized for a minimum of 2 days of peak screening yield. The washer compactor will reduce the volume of screenings by approximately 50 percent, so this factor should be taken into consideration when sizing the roll-off container.

REFERENCES

Grant, D. M., & Dawson, B. D. (2001). Isco Open Channel Flow Measurement Handbook Fifth Edition. Lincoln, NE: Isco, Inc.

(1998). *Design of Municipal Wastewater Treatment Plants: WEF Manual of Practice No. 8 ASCE Manuals and Reports on Engineering Practice No. 76.* (4th ed., Vol. 2). McGraw-Hill Education.

G.5 Equipment Designation and Numbering

A unique tag number should be assigned to any item at the three facilities that requires automation or monitored for a particular parameter (e.g., level). SVCW standard equipment and valve identification naming convention shall be used for assigning names to equipment, valves, and instrumentation on this project. The equipment designation and numbering consists of four parts: (1) Process Area, (2) Process Function, (3) Equipment Designator, and (4) a five digit sequential number. The following sections describe the components of the naming convention.

G.5.1 Process Area

The following process area designations shall be used at each of the pump stations. An example of the types of facilities and equipment that shall be assigned to each process area is also displayed below.

Table G-4. Process Area Designations		
Abbreviator	Process Area	Types of Facilities/Equipment
EGN	Emergency Generator	• Fuel Storage Tanks • Standby Generator
HDW	Headworks	• Screens • Washer Compactor • Screening Sluice • Associated Screen Channel Gates and Level Sensors
HVA	Heating and Ventilation Air Conditioning	• Supply Air Fans • Exhaust Fans • Odor Control Unit
INF	Influent	• Junction Structure • Flow Meters and Sampling Equipment for Incoming Flow at PS3
SRG	Surge Control	• Surge Control Tanks • Recirculation Pumps
WW	Wet Well	• Pumps • Valve Vault • Flow Meters

Additional process area designations are located in the latest version of the SVCW Standard Equipment and Valve Identification Naming Convention.

G.5.2 Process Function Designations

The following process function designations shall be used for this project:

Table G-5. Process Function Designations	
Abbreviation	Process Function
ANA	Analyzer
CNT	Control
DET	Detector
DRN	Drain
DIS	Discharge
EXH	Exhaust
FIL	Fill
GS	General Service
INJ	Injection
INL	Inlet

Table G-5. Process Function Designations	
Abbreviation	Process Function
INT	Instrument
ISL	Isolation
MET	Metering
MIX	Mixing
MOD	Modulating
MON	Monitor
OUT	Outlet
PLY	Polymer Related Function
RET	Return
REC	Recirculation (added)
SCR	Screen
SDW	Sludge Dewatering
SUP	Supply
SW	Seal Water
SUC	Suction
SUM	Sump
TRA	Transmitter
TRS	Transfer

This list of process function designations may be expanded subject to review and approval by SVCW.

G.5.3 Equipment Designations

Equipment includes mechanical, electrical , and instrumentation equipment. The following equipment designations shall be used:

Table G-6. Equipment Designations	
Abbreviation	Equipment
AC	Air Conditioning Unit
ACD	Analyzer Conductivity
AD	Auto Dialer
AHU	Air Handling Unit
AI	Analog Input
ALM	Alarm
AO	Analog Output

Table G-6. Equipment Designations	
Abbreviation	Equipment
ATS	Automatic Transfer Switch
AUD	Audible Alarm
BAT	Battery
BDV	Blow Down Valve
BFS	Burner Flame Sensor (Cadmium Eye)
BI	Analyzer Blanket Indicating
BLR	Boiler
BLT	Blanket Depth Sensor
BLW	Blower
BUB	Bubbler
C2	Analyzer Carbon Dioxide
CEN	Centrifuge
CH	Chiller
CHG	Battery Charger
CL	Analyzer Chlorine
CLK	Clock
CNV	Conveyor
CO	Analyzer Carbon Monoxide
COL	Collector
CP	Control Panel
DI	Discrete Input
DIS	Distributor Arm (added)
DO	Discrete Output
DO	Analyzer Dissolved Oxygen
DOP	Doppler
DU	Drive Unit
FAN	Fan
FE	Flow Sensing Element
FIT	Flow Indicating Transmitter
FLC	Flocculator
FLT	Float Switch

Table G-6. Equipment Designations	
Abbreviation	Equipment
FQT	Flow Totalizing Transmitter
FS	Flow Switch
FT	Flow Transmitter
GDR	Grinder
GEN	Generator
GLS	Gate Limit Switch (Open/Closed)
HEX	Heat Exchanger
HS	Hand Switch
IE	Current Element (Amp Meter)
IIT	Current Indicating Transmitter (Amp Meter)
IT	Current Transmitter (Amp Meter)
JE	Power Sensing Element
JIT	Power Indicating Transmitter
JT	Power Transmitter
LE	Level Sensing Element
LGT	Alarm Light
LIT	Level Indicating Transmitter
LS	Level Switch
LT	Level Transmitter
MBS	Mechanical Bar Screen
MCC	Motor Controller Center
MME	Miscellaneous Mechanical
MTR	Motor
MXR	Mixer
NT	Analyzer Turbidity
PCV	Pressure Control Valve
PDT	Pressure Differential Indicating Transmitter
PE	Pressure Sensing Element
Ph	Analyzer pH
PIT	Pressure Indicating Transmitter
PLC	Programmable Logic Controller

Table G-6. Equipment Designations	
Abbreviation	**Equipment**
PMP	Pump
PNL	Panel
PRX	Proximity Sensor
PSW	Pressure Switch
PT	Pressure Transmitter
PT	Pressure Transducer
PWR	Power Supply
RDR	Radar LIT
RFP	Rotary Fan Press
RTU	Remote Terminal Unit
SE	Speed Element
SG	Slide Gate
SI	Analyzer Sulfite Ion
SIT	Speed Indicating Transmitter
SS	Analyzer Suspended Solids
ST	Speed Transmitter
SV	Solenoid Valve (added)
SWB	Switchboard
SWR	Switchgear
T	Transmitter
TE	Temperature Sensing Element
TFR	Transformer
TG	Analyzer Gas
TIT	Temperature Indicating Transmitter
TS	Temperature Switch
TS	Analyzer Total Solids
TT	Temperature Transmitter
TTG	Analyzer Triple Gas
TTL	Totalizer
TTM	Transit Time
UPS	Un-interruptible Power Supply

Table G-6. Equipment Designations	
Abbreviation	Equipment
USD	Ultra Sound
VE	Voltage Element
VE	Vibration Element
VFD	Variable Frequency Drive
VIT	Voltage Indicating Transmitter
VIT	Vibration Indicting Transmitter
VLV	Valve
VNT	Venturi
VPS	Valve Position Sensor (% open)
VT	Voltage Transmitter
VT	Vibration Transmitter
WC	Washer Compactor Unit
WE	Torque Element
WGB	Waste Gas Burner
WIT	Torque Indicating Transmitter
WS	Torque Switch
WSK	Whisker Switch
WT	Torque Transmitter
ZC	Position Closed Switch/Indicator
ZO	Position Open Switch/Indicator

The equipment list designations may be expanded subject to review and approval by SVCW.

G.5.4 Sequential Number

A five digit sequential number shall be applied to each panel, equipment, valve, or instrument. Per SVCW's naming convention, the five digit number does not need to be unique if the preceding process area, process function designation, and equipment designation within the name is unique. For example, a submersible pump in Wet Well 1 at Pump Station 1 and the influent slide gate to Wet Well 1 at Pump Station 1 shall have the same five digit sequential number but the overall names shall be unique (WW_TRS_PMP_51101 vs. WW_INL_SG_51101). Subsequent pumps or slide gates shall have five digit sequential numbers of 01102, 01103, etc.

The five digit sequential number following the process area designation, process function designation, and equipment designation for each piece of equipment is comprised of three parts. The first two digits represent the SVCW location code. For this project, the following location code designations shall be used:

- 51 for Pump Station 1 (West Bay S.D.)
- 52 for Pump Station 2 (Redwood City)
- 53 for Pump Station 3 (San Carlos)

The third digit in the sequential number is assigned based on the major areas it is related to as follows:

- 0 for items common to multiple process units, such as the influent junction structure and screens
- 01 for Wet Well 1
- 02 for Wet Well 2

The fourth and fifth digits are sequential numbers assigned based on order in the process line. Lower numbers are in the beginning of the process line and higher numbers are further along the process line.

G.5.5 Equipment and Instrument Naming

The resulting equipment and instrument numbers shall include the four components separated by an underscore as follows: "Process Area_Process Function_Equipment Designator_Sequential Number." A few examples are presented below.

Table G-7. Equipment and Instrument Designation and Number Examples

Example of Mechanical Bar Screen at PS2	
Process Area =	HDW
Process Function =	SCR (Screen)
Equipment Designator =	MBS (Mechanical Bar Screen)
Digit 1 and 2	52 (Redwood City)
Digit 3	0 (general use, not tied to a wet well)
Digit 4 and 5	01
Mechanical Bar Screen number one =	HDW_SCR_MBS_52001
Example of First Pump in Wet Well 1 at PS1	
Process Area =	WW
Process Function =	TRS (Transfer)
Equipment Designator =	PMP (Pump)
Digit 1 and 2	51 (West Bay S.D.)
Digit 3	1 (Wet Well 1)
Digit 4 and 5	01
Pump 1 in Wet Well 1 =	WW_TRS_PUMP_51101
Example of Inlet Slide Gate in Wet Well 2 at PS3	
Process Area =	WW
Process Function =	INL (Inlet)
Equipment Designator =	SG (Slide Gate)

Table G-7. Equipment and Instrument Designation and Number Examples	
Digit 1 and 2	53 (San Carlos)
Digit 3	2 (Wet Well 2)
Digit 4 and 5	01
Inlet Slide Gate in Wet Well 2 =	WW_INL_SG_53201

G.5.6 Additional Naming Considerations

The following is a list of additional naming considerations that shall be used during the pump station design:

- Hand switches are considered to be equipment control; therefore, the process function designation shall be “CNT” for control.
- Other switches (flow switches, motor temp switches, valve open/close status, etc) are used for detecting “events.” These switches shall be assigned a process function designation of “DET” for detect (e.g., WW_DET_TS_52104 and WW_DET_WS_52104).
- Pressure elements (PE) are considered to be instruments; therefore, they shall be assigned a process function designation of “INT.”
  - Pressure gages (dial style) shall be named after the piping process designation (e.g., “DIS” for discharge if the dial style pressure gage is located on the discharge end of a pump).
- Pressure-Indicating Transmitters (PIT) shall be assigned a process function of “MON” since they output an analog signal.
- Isolation valves shall be assigned a process function named using the piping process function (e.g., "DIS" for discharge).
- For example, Plug Valve on Pump 1 Discharge Line: WW_DIS_VLV_52101.
- All valves on supply fans or exhaust fans will have the process function "SUP" or "EXH." "SUC" or "DIS" process functions will not be used for HVAC and will mainly be used for pumps. For example,
  - Butterfly Valve on 1 on Supply Fan 1 Line: HVA_SUP_VLV_52001.
  - Butterlfy Valve 2 on Exhaust Fan 4 Line: HVA_EXH_VLV_52106.

G.6 Piping, Valves, and Accessories

The following describes the general requirements for piping, fittings, valves, and accessories. Piping, fittings, and valves shall be as designated in the piping specification sheets (PIPESPEC) are included in Attachment H.

G.6.1 Flanges and Pipe Threads

Flanges on equipment and appurtenances shall conform in dimensions and drilling to ANSI B16.1, Class 125. Pipe threads shall conform in dimension and limits of size to ANSI B1.1, coarse thread series, Class 2 fit.

Threaded flanges shall have a standard taper pipe thread conforming to ANSI B1.20.1. Flanges shall be flat-faced whenever practical.

Flange assembly bolts shall be heavy pattern, hexagonal head, carbon steel machine bolts with heavy pattern, hot-pressed, hexagonal nuts conforming to ANSI B18.2.1 and B18.2.2. Threads shall be Uniform Screw Threads, Standard Coarse Thread Series, Class 2A and 2B, ANSI B1.1.

G.6.2 General Valve Requirements

All valves, except those which are equipped with power operators or those designed for automatic operation, shall be provided with manual operators.

Unless specifically required to be equipped with other types of operators, all valves with centerlines more than 7 feet 6 inches above the floor shall be provided with chain wheels and operating chains.

Wrench nuts shall be provided on all buried valves, on all valves which are to be operated through floor boxes, and where otherwise required.

Valve types shall be as designated in the attached piping specification sheets. Valves of the same size and service shall be provided by a single valve manufacturer.

G.6.3 Butterfly Valves

Butterfly valves shall be of the stub or through shaft design, flanged or equipped for grooved end mechanical-type (Victaulic) pipe couplings.

Butterfly valve bodies shall be cast iron, ASTM A126, Grade B. Valve bearings shall be reinforced Teflon or chemically inert nylon.

Butterfly valve shafts shall be stainless steel, ASTM A276, Type 304 or ASTM A582, Type 416. Seat mating surfaces shall be stainless steel, ASTM A276, Type 304. Seat sealing surface shall be neoprene or Buna-N.

Discs shall be ductile iron, ASTM A536 or cast iron, ASTM A48, Class 40 or ASTM A126, Class B.

Butterfly valves shall be used for isolating service on water, air, and gas service applications.

G.6.4 Ball Valves

Ball valves 2 inches and smaller shall be threaded, full bore, shall have bronze or brass bodies, balls and stems, and Teflon seats at both ends. Valves shall be rated at 300 psi and shall be so constructed as to make positive shutoff with flow in either direction.

Ball valves larger than 2 inches shall be flanged, full bore, shall have carbon steel or ductile iron bodies, balls and stems, and Teflon seats at both ends. Valves shall be rated at 275 psi and shall be so constructed as to make positive shutoff with flow in either direction.

Ball valves shall be used for isolating service on air and water service applications.

G.6.5 Gate Valves

Gate valves 3 inches and larger in size shall comply with ANSI/AWWA C500, including hydrostatic testing requirements. Gate valves smaller than 3 inches shall be subject to system test pressure hydrostatic testing.

Materials of construction shall be as follows:

Component	Material
Body:	
3 inches and smaller	Bronze
Larger than 3 inches	Cast iron, ASTM A126, Class B
Wedge:	
3 inches and smaller	Bronze
Larger than 3 inches	Cast Iron, ASTM A126, Class B
Mounting	Bronze
Stem	Bronze, ANSI/AWWA C500 (Section 3.12)
Seat rings	Bronze, Grade A, ANSI/AWWA C500 (Section 3.8)

All exposed gate valves shall be rising stem type. All buried or submerged gate valves shall be nonrising stem type.

G.6.6 Globe Valves

Globe and angle valves shall have all bronze bodies.

Valves shall have union bonnets and renewable composition or plug discs. Valves shall be repackable when open.

Globe and angle valves shall be rated at 200 psig.

Globe valves shall be used for throttling service on air and water service applications.

G.6.7 Eccentric Plug Valves

Eccentric plug valves shall be straight-flow, nonlubricated, resilient plug type suitable for driptight, bi-directional shutoff.

Valve upper and lower journal bearings shall be replaceable, sleeve-type, corrosion-resistant, and permanently lubricated.

Materials of construction shall be as follows:

Component	Material
Body	Cast iron, ASTM A126, Class B
Plug	Cast iron, ASTM A126, Class B; cast iron, ASTM A436 (No-resist); or ductile iron, ASTM A536
Plug facing	Neoprene or Buna-N
Body seats:	
Less than 3 inches	Cast iron, ASTM A126, Class B
3 inches and larger	Stainless steel, ASTM A276, Type 316 or nickel
Packing	Buna V-flex or TFE

Eccentric plug valves 3 inches and smaller shall be threaded. Valves larger than 3 inches shall be flanged or equipped for grooved-end, mechanical-type (Victaulic) couplings match pipe ends.

G.6.8 Pressure Regulating Valves

Pressure regulating valves for air, water, and gas service shall be of the direct acting type.

Valves used for water service shall have bronze bodies and stainless steel seats. Diaphragms shall be Buna-N with nylon inserts.

Valves used for air service shall have bronze bodies and stainless steel or monel seat rings.

Valves used for gas service shall have cast iron bodies, and trim shall be stainless steel, Type 316.

G.6.9 Solenoid Valves

Solenoid valves shall be encapsulated coil, direct operated, suitable for two-, three-, or four-way service.

Solenoid valve bodies shall be brass or Type 316 stainless steel. Seats shall be Teflon or Buna-N.

Solenoid valve coils shall be the tube, core or shell type.

G.6.10 Piping Accessories

The piping accessories criteria is discussed below.

G.6.10.1 Strainers

a. Pipeline strainers for air, gas, and water shall be of the Y-pattern in-line type or basket type.

b. Air and gas strainers shall have monel screens, brass blowoff cocks, and stainless steel bodies. The filter material shall be Everdur wool.

c. Water strainers shall have stainless steel or monel screens and bronze or Type 316 stainless steel bodies.

G.6.10.2 Vacuum Breakers

Vacuum breakers shall have carbon steel bonnets, springs and bodies with stainless steel stems, discs, and fasteners. The vacuum breaker valves shall have grooved-end, mechanical-type (Victaulic) coupling connections and shall be rated for a 30-inch mercury vacuum.

G.6.10.3 Flexible Pipe Connectors

a. Flexible pipe connections shall be installed at the suction and discharge of all rotating equipment to minimize pipe vibration and allow easier pipe removal at equipment for maintenance.

b. Where piping passes through walls, takedown couplings shall be provided within 3 feet of the wall.

c. A screw union or flanged takedown connection shall be provided within 2 feet of each threaded end valve. For pipelines 2-1/2 inches in diameter and larger, a grooved-end, mechanical-type (Victaulic) coupling or screw union connection shall be provided on each valve end.

d. Piping 2 inches in diameter and larger passing from concrete to earth shall be provided with two pipe couplings or flexible joints within 2 feet or one pipe diameter of the structure, whichever is greater. Where required for resistance to pressure, mechanical couplings shall be restrained in accordance with AWWA M11, Figures 19.15 and 19.16 and Table 19.7.

G.6.11 Piping Insulation

Insulation shall be provided for the following piping and related vessels and appurtenances where applicable:

Potable water (in condensation sensitive locations)

Domestic hot water

Service air (between compressor and aftercooler)

Heat reservoir water

Insulation shall include insulating material, protective jackets, flashing, and other materials as required. Pre-insulated piping shall be used where applicable.

G.6.11.1 Low Temperature Insulation

Low temperature insulation shall be of the unicellular elastomeric thermal type, or premolded fiberglass.

Piping insulation shall be tubular for simple installation.

Insulation shall be applied over clean, dry surfaces with all joints butted firmly together.

Low temperature insulation shall be for chilled water piping, and potable water piping insulation for thermal and condensation control. Surfaces to be insulated include piping and related vessels and appurtenances.

The minimum insulation thicknesses shall be as shown in Table G-8:

Table G-8. Minimum Insulation Thicknesses for Low Temperature Insulation

Pipe size, inches	Minimum insulation thicknesses, inches
1/2 - 2	1
2-1/2 - 4	1-1/2
6 - 12	2
14 and larger	2-1/2

Aluminum jacket shall conform to ASTM B209, alloy 5005, temper H16. Sheet metal screws shall be 6061-T aluminum, anodized 2024 aluminum or Type 300 or 400 series stainless steel of adequate strength. Aluminum jacket shall be for piping larger than 2 inches in diameter. Laminated polyvinyl jacket shall be for piping 2 inches in diameter and smaller. Shield for the protection of nonrigid insulation at hangers and supports shall be 16-gage galvanized steel sheet.

G.6.11.2 Medium Temperature Insulation

Medium temperature insulation shall be for agitation air piping, instrument and service air piping, hot water piping, and heat reservoir water piping insulation.

Hot water piping insulation shall be suitable for an operating temperature range of 100 to 300 degrees F.

Insulation includes insulating material, protective jackets, flashing and other materials specified. Surfaces to be insulated include piping and related vessels and appurtenances.

The minimum insulation thicknesses shall be as shown in Table G-9:

Table G-9. Minimum Insulation Thicknesses for Medium Temperature Insulation	
Pipe size, inches	Minimum insulation thicknesses, inches
1/2 - 2	1
2-1/2 - 4	1-1/2
6 - 12	2
14 and larger	2-1/2

Jackets shall be similar to the jackets for low temperature insulation.

G.6.12 Pipe Supports

Pipe hanger and support selection and application shall conform to the requirements of MSS SP-69, FEDSPEC WW-H-171e and governing state and local codes. In case of conflict, governing state or local codes shall be followed. Pipe hanger and support materials, design and manufacture shall conform to the requirements of MSS SP-58. Pipe hanger and support fabrication and installation shall conform to the requirements of MSS P-89. Metal framing system components and application shall conform to MFMA-2 and MFMA-101.

Pipe hangers and supports, structural attachments, fittings and accessories shall be Type 316 stainless steel. Nuts, bolts and washers shall be Type 316 stainless steel.

Hangers and supports shall be located as near as possible to concentrated loads such as valves, flanges, etc. At least one hanger or support shall be located within 2 feet from a pipe change in direction on each run of pipe from the change in direction. Hangers and supports shall be located such that connections to equipment, tanks, etc., are substantially free from loads transmitted by the piping. Where piping is connected to equipment, a valve, piping assembly, etc., that shall require removal for maintenance, the piping shall be supported in such a manner that temporary supports shall not be necessary for this procedure. Pipe shall be installed in straight and true runs, without sags, high points or deformation caused by loads imposed on the pipe support system.

Welded and bolted attachments to building structural steel shall be in accordance with the requirements of the AISC Manual of Steel Construction. There shall be no drilling or burning of holes in building structural steel. Hanger components shall not be used for purposes other than for which they were designed. They shall not be used for rigging and erection purposes. Items to be embedded shall be installed before concrete is poured. Embedded items shall be secured to the forms to prevent movement when concrete is poured. Embedded anchor bolts shall be used instead of concrete inserts for support installations in areas below water surface or normally subject to submerging. Thermal pipe hanger shields shall be installed on insulated piping at required locations during hanger and support installation. Butt joint connections to pipe insulation shall be made at the time of insulation installation in accordance with the manufacturer's recommendations. Hanger and support components in contact with plastic pipe shall be free of burrs and sharp edges. Rollers shall roll freely without binding.

Finished floor beneath stanchion baseplate structural attachments and framing channel post bases shall be roughed prior to grouting. Grout between base plate and floor shall be free of voids and foreign material. Baseplates shall be cut and drilled to specified dimensions prior to welding

stanchions or other attachments and prior to setting anchor bolts. Plastic or rubber end caps shall be provided at the exposed ends of all framing channels that are located up to 7 feet above the floor.

For pipes less than 8-inches in diameter, the supports shall be designed by the Contractor.

G.6.13 Seismic Restraints

The seismic restraint system shall be designed by the professional engineer retained by the construction contractor for design of the pipe support systems. Seismic restraint details shall be designed in conjunction with preparation of pipe hanger support system drawings. All drawings and calculations for the seismic restraint system shall bear the professional engineer's registration seal and signature.

Pipe restraint materials, design, manufacture, testing, installation and application shall conform to the requirements of MSS SP-58, MSS-SP-69, MSS-SP-89, MFMA-2, and MFMA-101. Restraints, including braces, and pipe and structural attachments, shall be Type 316 stainless steel. Nuts, bolts and washers shall be Type 316 stainless steel. For corrosive areas all pipe support, anchor and brace components (not just fittings and accessories) shall be made of fiberglass.

Piping systems shall not be braced to dissimilar parts of a building or to dissimilar building systems that may respond in a different mode during an earthquake. (Examples: wall and a roof; solid concrete wall and a metal deck with lightweight concrete fill.) Restraints shall be sized to fit the outside diameter of the pipe, tubing, or the outside diameter of insulation. There shall be no contact between a pipe and restraint component of dissimilar metals. When restraining copper tubing, copper-plated, rubber, plastic or vinyl coated, or stainless steel restraint components shall be used. Branch lines shall not be used to brace main lines. Seismic bracing shall not limit the expansion and contraction of the piping system.

The first seismic restraint on a piping system shall be located not more than 10 feet from the main riser, entrance to a building or piece of equipment. Cast iron pipe shall be braced on each side of a change in direction of 90 degrees or more. Joints in risers shall be braced or stabilized between floors. No-hub and bell and spigot cast iron soil pipe shall be braced longitudinally every 20 feet and laterally every 10 feet. Lateral bracing for one pipe section may also act as longitudinal bracing for the pipe section connected perpendicular to it, if the bracing is installed with 24 inches of the elbow or tee of the same size.

Rod stiffener assemblies shall be used at seismic restraints for hanger rods over 6 inches in length. A minimum of two-rod stiffener clamps shall be used on any rod stiffener assembly. Lateral and longitudinal bracing shall be installed between 45 degrees above and 45 degrees below horizontal, inclusive, relative to the horizontal centerline of the pipe. Welded and bolted attachments to building structural steel shall be in accordance with the requirements of the AISC Manual of Steel Construction. There shall be no drilling or burning of holes in the building structural steel unless otherwise specified. Embedded anchor bolts shall be used instead of concrete inserts for seismic brace installations in areas below water surface or normally subject to submergence. Thermal pipe hanger shields shall be installed on insulated piping at required locations during restraint installation. Butt joint connections to pipe insulation shall be made at the time of insulation installation in accordance with the manufacturer's recommendations. Restraint components in contact with plastic pipe shall be free of burrs and sharp edges. Rollers shall roll freely without binding. Plastic or rubber end caps shall be provided at the exposed ends of all framing channels that are located up to 7 feet above the floor.

G.6.14 Expansion Control

The expansion control system shall be designed by the professional engineer retained by the construction contractor for design of the pipe support systems. Expansion control details shall be designed in conjunction with preparation of pipe hanger support system and seismic restraint systems drawings. All drawings and calculations for the expansion control system shall bear the professional engineer's registration seal and signature.

Anchors and guides shall be manufactured or iron or steel, including braces, pipe and structural attachments, and shall be hot-dip galvanized after fabrication. Supports cast integrally with cast iron fittings shall be specifically prohibited for use in any application where shear forces may be imposed on the support. Nuts, bolts and washers may be zinc-plated except for those subject to moisture or corrosive atmosphere which shall be Type 316 stainless steel. For corrosive areas all pipe support, anchor and brace components (not just fittings and accessories) shall be made of fiberglass.

The expansion control system shall be designed for maximum reliability. "L", "U", or "Z" bends shall be employed to control expansion in preference over expansion joints. Expansion control systems using pipe bends shall be designed to limit bending stress in the pipe associated with deflection at the worst case temperature difference. The maximum allowable bending stress shall be 1/3 of the yield stress for the pipe material. If loading conditions or uncertainties warrant, a lower allowable stress value shall be used. Expansion control design for expansion joints shall conform to the guidelines given in the Standards of the Expansion Joint Manufacturers Association, Inc. (EJMA). The test pressures listed in the PIPESPEC sheets shall be used when calculating pressure forces. Pipe guides or planar pipe guides shall be provided to control the movement of pipes when "L", "U", or "Z" bends are used for expansion control. The guides shall be located as indicated in EJMA standards. Recommended main anchor locations shall be shown on the drawings. Intermediate anchors shall be provided as needed. Maximum forces that the structure can withstand at the main anchor points shall be noted on the drawings. Anchors shall be designed to attach to the structure and solidly to the pipe. Pipe clamps or U-bolts shall not be allowed unless they are designed to withstand the forces imposed upon the anchor and have stops welded to the pipe so that the pipe cannot slip in the anchor. Anchors and guides shall be coordinated with the pipe support systems and seismic restraints. The design of the expansion control, pipe support and seismic restraints for the piping systems shall be integrated to provide maximum flexibility for maintenance access to equipment, appurtenances such as valves etc., and to the pipe itself. There shall be no metal-to-metal contact between a pipe and restraint component of dissimilar metals. Branch lines shall not be used to anchor main lines. For elevated pipe sections, fabricated support frames or other appropriate structures shall be designed to withstand the specified loads plus gravity and seismic loads. The support shall be designed to provide access to equipment, walkways, gates, and other piping.

Welded and bolted attachments to building structural steel shall be in accordance with the requirements of the AISC Manual of Steel Construction. There shall be no drilling or burning of holes in the building structural steel unless otherwise specified. Embedded anchor bolts shall be used instead of concrete inserts, wedge anchors, expansion anchors, adhesive, or other non-embedded type of anchor for expansion control installations in areas below water surface or normally subject to submerging. Thermal pipe hanger shields shall be installed on insulated piping at required locations during guide installation. Butt joint connections to pipe insulation shall be made at the time of insulation installation in accordance with the manufacturer's recommendations. Anchors shall be directly connected to the pipe by welding or another acceptable, positive means. Components in contact with plastic pipe shall be free of burrs and sharp edges. Rollers shall roll freely without

binding. Plastic or rubber end caps shall be provided at the exposed ends of all framing channels that are located up to 7 feet above the floor.

G.6.15 Miscellaneous

Exposed piping, interior and exterior, and piping in ceiling spaces, pipe trenches, pipe chases, and valve boxes shall be identified with plastic legend markers and directional arrows located at each side of the walls, floorings, and ceilings, at one side of each piece of equipment, at piping intersections, and at approximately 50 foot centers.

Connection of ferrous to nonferrous metal piping shall be with an insulating section of rubber or plastic pipe having a minimum length of 12 pipe diameters or with a dielectric union.

Buried ferrous piping shall be corrosion protected by coating with liquid epoxy conforming to ANSI/AWWA C210, polyethylene tape coating conforming to ANSI/AWWA C214, or fusion epoxy as specified in the piping system specification sheets.

Buried ductile iron piping shall be corrosion protected by coating with asphaltic coating conforming to ANSI/AWWA C151/A21.11 and wrapped with polyethylene film conforming to ANSI/AWWA C1051A21.5.

G.7 Piping Services Index and Specifications

Table G-10, which follows, provides a list of pipe services to be used in this project. Each pipe service is given a symbol which shall be used on the drawings. The system number indicates which pipe system specification applies to this service. Color coding and fluid category provide a quick reference of a pipe service. The piping specifications in accordance to their system number are included in Attachment H.

Table G-10. Piping Services

Symbol	Service	System	Fluid category	Pipe marker background color
CD	Chemical Drain	25	Drain/Vent	Yellow
CSO	Caustic Soda	19	Chemical	Yellow
D	Drain	24	Drain/Vent	Green
DSF	Diesel Fuel	18	Petroleum	White
FA	Foul Air	22	Foul Air	Yellow
FM	Force Main	12A	Wastewater	Green
HOCl	Sodium Hypochlorite	19	Chemical	Yellow
HW	Potable Hot Water	7	Water	Blue
LOR	Lube Oil Return	18	Petroleum	White
LOS	Lube Oil Supply	18	Petroleum	White
LOW	Lube Oil Waste	18	Petroleum	White
PD	Pumped Drainage	12	Wastewater	Green
RS	Raw Sewage (Gravity)	12	Wastewater	Green

Table G-10. Piping Services				
Symbol	Service	System	Fluid category	Pipe marker background color
RWR	Reclaimed Water	9	Water	Green
SA	Service Air	2	Air	Orange
SD	Sanitary Drain	24	Drain/Vent	Green
STD	Storm Drain	24	Drain/Vent	Green
V	Vent	24	Drain/Vent	Yellow
VC	Chemical Vent	25	Drain/Vent	Yellow
1W	Potable Water (City water)	7	Water	Blue
3WS	No. 3 Spray Water	10	Water	Green

Note: System numbers 1, 3-6, 8, 11, 13-17, 20-21, 23 and 26-30 not included.

G.8 Standard Details

Standard details are included in Attachment N.

H. ATTACHMENT

Piping Specifications

The purpose of this document is to guide the pump station final design teams and to ensure consistent quality and similar facilities for ease of operation and maintenance. This document is meant to be a working document for the design teams such that during the design, changes can be made based on design team review and consensus.

PIPING SPECIFICATION SHEETS--PIPESPEC

Piping Symbol/Service:	SA--Service Air	System--2

Test Requirements:

Medium:	Water
Pressure:	20 inches water column
Duration:	60 minutes

Gasket Requirements:

Flange:	Compressed gasketing consisting of organic fibers (Kevlar) and neoprene binder
Push-on/Mech Cpl:	N/A

Exposed Pipe and Valves:

(24" and smaller)

Pipe:	Fiberglass Reinforced Plastic; ASTM D883, filament wound construction. Conn; butt or mitered weld, flanged for valves. Ftgs; molded or fabricated as the same material as the pipe.
Valves:	Ball; Jamesbury 5150-31-2200TT, Nibco F-510, or equal. Check; Ported plate style designed for use with pulsating flow; Hoerbiger Depend-A-Check or Compact-A-Check, Dienes Type DL-RF, or equal.

Buried and Encased Pipe and Valves:

(24" and smaller)

Pipe:	HDPE; AWWA C906. Provide magnetic tracer tape. Conn; thermal butt-fusion welded with flanged adapters for valves. Ftgs; HDPE AWWA C906, fabricated; ends and SDR to match pipe
Valves:	Ball; same as exposed with extension stem and valve box.

Remarks:

1. Pipe materials for immersed service air piping shall be:

   (2" and smaller)

Pipe:	Stainless steel; ASTM A312, Schedule 40S. Conn; threaded, ANSI B1.20.1. Ftgs; ASTM A403, material, ends and wall thickness to match pipe.

2. Encased pipes shall not be coated.

PIPING SPECIFICATION SHEETS--PIPESPEC

Piping Symbol/Service	1W--Potable Water	System--7

Test Requirements:

Medium:	Water
Pressure:	150 psig
Duration:	60 minutes

Gasket Requirements:

Flange:	Compressed gasketing consisting of organic fibers (Kevlar) and neoprene binder
Push-on/Mech Cpl:	EPDM

Exposed Pipe and Valves:

(3" and smaller)

Pipe:	Copper tube; ASTM B88, Type L, drawn. Conn; solder type with threaded or flanged adapters for valves. Ftgs; wrought copper or bronze, ANSI B16.22.

(2" and smaller)

Valves:	Ball; Jamesbury Fig. 351, Nibco T-580, or equal. Globe; Crane 7TF or 17TF, Lunkenheimer 123 or 214, or equal. Swing check; Crane 137, Lunkenheimer 230, or equal.

(4" and larger)

Pipe:	Steel; ASTM A53, seamless, Grade B, black, with cement mortar lining. Conn; grooved mechanical pipe coupling or flanged. Ftgs; malleable iron, ductile iron, or steel ends and lining to match pipe.

(2 1/2" and larger)

Valves:	Butterfly. Substitute Type B on 2-1/2-inch lines. Swing check; spring loaded.

Buried and Encased Pipe and Valves:

(3" and smaller)

Pipe:	Copper tube; ASTM B88, Type K, annealed or drawn. Conn; solder type, with threaded or flanged adapters for valves. Ftgs; wrought copper or bronze, ANSI B16.22.
Valves:	Gate; ref. spec Section 15101, with extension stem and valve box. Coating shall be petrolatum based mastic and wrapping tape.

(4" and larger)

PIPING SPECIFICATION SHEETS--PIPESPEC

Piping System:	7 (continued)
Pipe:	Ductile iron; AWWA C151 with cement mortar lining. Outside shall be coated with 100-percent solids polyurethane, fusion bonded epoxy, or tap wrap conforming to AWWA C209. Conn; grooved end or restrained push-on rubber gasket joint. Flanged adapters for valves. Ftgs; ductile iron per spec Section 15062; coating, lining, and ends to match pipe.
Valves:	Butterfly; same as exposed with extension stem and valve box. Coating shall be petrolatum based mastic and wrapping tape.

Remarks:

1. Manual air vents shall be provided at the high points and drains provided at the low points of each reach of pipeline.
2. Lug or flanged butterfly valves are required for dead end or isolation service.
3. Encased pipe shall not be coated.

PIPING SPECIFICATION SHEETS--PIPESPEC

Piping Symbol/Service:	RWR Reclaimed Water	System--9

Test Requirements:

Medium:	Water
Pressure:	125 psig
Duration:	60 minutes

Gasket Requirements:

Flange:	Compressed gasketing consisting of organic fibers (Kevlar) and neoprene binder
Push-on/Mech Cpl:	Nitrile or Neoprene

Exposed Pipe and Valves:

(3" and smaller)

Pipe:	Steel; ASTM A53, galvanized. Ref. spec Section 15061. Conn; taper threaded, ANSI B1.20.1. Flanged adapters for 2-1/2 inch, 3 inch valves. Ftgs; malleable iron, ASTM A197, ANSI B16.3, Class 150, galvanized.

(2" and smaller)

Valves:	Ball; Jamesbury Fig. 351, Nibco T-580, or equal. Globe; Crane 7TF or 17TF, Lunkenheimer 123 or 214, or equal. Swing check; Crane 137, Lunkenheimer 230, or equal.

(4" thru 8")

Pipe:	Steel; ASTM A53, ERW, Grade B, black, with cement mortar lining. Conn; grooved mech pipe coupling or flanged. Ftgs; malleable iron, ductile iron, or steel; ends and lining to match pipe.

(2 1/2" thru 8")

Valves:	Butterfly; Substitute Type B on 2-1/2-inch lines. Swing check; spring loaded.

(10" thru 24")

Pipe:	Steel; same as 8 inch or AWWA C200, 3/16 inch thick, with cement mortar lining. Conn; same as 8 inch. See Remarks. Ftgs; steel, ASTM A234, or fabricated steel, AWWA C208. Lining and ends to match pipe.
Valves:	Butterfly. Swing check; spring loaded.

PIPING SPECIFICATION SHEETS–PIPESPEC

Piping System: 9 (continued)

Buried and Encased Pipe and Valves:

(3" and smaller)

Pipe:	PVC; ASTM D1784, Class 12454-B, NSF certified, ASTM D1785, Sch. 80. Provide magnetic tracer tape. Conn; plain end; solvent weld with threaded or flanged adapters for valves. Ftgs; PVC, Sch. 80, socket weld.
Valves:	Gate; with extension stem and valve box. Coating shall be petrolatum based mastic and wrapping tapes.

(4" to 12")

Pipe:	Ductile iron; AWWA C151 with cement mortar lining. Outer coating shall be 100-percent solids polyurethane, fusion bonded epoxy, or tape wrap conforming to AWWA C209. Conn; grooved end or restrained push-on rubber gasket joint. Flanged adapters for valves. Ftgs; ductile iron; coating, lining and ends to match pipe.
Valves:	Butterfly; same as exposed with extension stem and valve box. Coating shall be petrolatum based mastic and wrapping tapes.

(14" and larger)

Pipe:	Ductile iron; same as 12 inch for pipe, conn and ftgs
Valves:	Butterfly; same as exposed with extension stem and valve box.

Remarks:

1. Manual air vents shall be provided at the high points and drains provided at the low points of each reach of pipeline.
2. Provide lug or flanged butterfly valves for dead end or isolation service.

3.06 PIPING SPECIFICATION SHEETS--PIPESPEC

Piping Symbol/Service: 3WS No. 3 Spray Water System--10

Test Requirements:

Medium:	Water
Pressure:	125 psig
Duration:	120 minutes

Gasket Requirements:

Flange:	Compressed gasketing consisting of organic fibers (Kevlar) and neoprene binder
Push-on/Mech Cpl:	Nitrile or Neoprene

Exposed Pipe and Valves:

(2" and smaller)

Pipe:	Steel; ASTM A53, galvanized. Conn; taper threaded, ANSI B1.20.1. Ftgs; malleable iron, ASTM A197, ANSI B16.3, Class 150, galvanized.
Valves:	Ball; Jamesbury Fig. 351, Nibco T-580, or equal. Globe; Crane 7TF or 17TF, Lunkenheimer 123 or 214, or equal. Swing check; Crane 137, Lunkenheimer 230, or equal.

(2 1/2" thru 8")

Pipe:	Steel; ASTM A53, ERW, Grade B, black, no lining. Conn; butt weld, grooved mech pipe coupling or flanged. Ftgs; malleable iron, ductile iron, or steel; ends to match pipe.
Valves:	Butterfly; Substitute Type B on 2-1/2-inch lines. Swing check; spring loaded.

(10" and larger)

Pipe:	Steel; same as 8 inch or AWWA C200, 3/16 inch thick, w/lining. Conn; butt weld, mech pipe coupling, or flanged. Ftgs; steel, ASTM A234, or fabricated steel, AWWA C208; lining and ends to match pipe.
Valves:	Butterfly. Swing check; spring loaded.

Buried and Encased Pipe and Valves:

(3" and smaller)

3.06 PIPING SPECIFICATION SHEETS--PIPESPEC

Piping System: 10 (continued)

Pipe: PVC; ASTM D1784, Class 12454-B, ASTM D1785, Sch. 80. Provide magnetic tracer tape.
Conn; plain end; solvent weld with threaded or flanged adapters for valves.
Ftgs; PVC, Sch. 80, socket weld.

Valves: Gate; with extension stem and valve box. Coating shall be petrolatum based mastic and wrapping tapes.

(4" thru 12")

Pipe: Ductile iron; AWWA C151. Outer coating shall be 100-percent solids polyurethane, fusion bonded epoxy, or tape wrap conforming to AWWA C209.
Conn; grooved end or restrained push-on rubber gasket joint. Flanged adapters for valves.
Ftgs; ductile iron; coating, lining and ends to match pipe.

Valves: Butterfly; same as exposed with extension stem and valve box. Coating shall be petrolatum based mastic and wrapping tapes.

(14" and larger)

Pipe: Ductile iron; same as 12 inch for pipe and ftgs.
Conn; restrained bell and spigot with O-ring rubber gasket joint. Flanged adapters for valves.
Ftgs; fabricated steel, mortar lined and coated.

Valves: Butterfly; same as exposed with extension stem and valve box. Coating shall be petrolatum based mastic and wrapping tapes.

Remarks:

1. Manual air vents shall be provided at the high points and drains provided at the low points of each reach of pipeline.
2. Provide lug or flanged butterfly valves for dead end or isolation service.

PIPING SPECIFICATION SHEETS--PIPESPEC

Piping Symbol/Service:	RS--Raw Sewage	System--12

Test Requirements:

Medium:	Water.
Pressure:	125 psig
Duration:	120 minutes

Gasket Requirements:

Flange:	Compressed gasketing consisting of organic fibers (Kevlar) and neoprene binder
Push-on/Mech Cpl:	Nitrile or Neoprene

Exposed Pipe and Valves:
(Not Used)

Buried and Encased Pipe and Valves:

(3" and smaller)

Pipe:	PVC; ASTM D1784, Class 12454-B, ASTM D1785, Sch. 80. Provide magnetic tracer tape. Conn; plain end; solvent weld with threaded or flanged adapters for valves. Ftgs; PVC, Sch. 80, socket weld.
Valves:	Eccentric plug; same as exposed with extension stem and valve box. Fusion bonded epoxy lined and coated, applied in accordance with AWWA C550.

(4" thru 12")

Pipe:	Ductile iron; AWWA C151. Coated with 100-percent solids polyurethane, fusion bonded epoxy, or tape wrapped conforming to AWWA C209. Conn; grooved end or restrained push-on rubber gasket joint. Flanged adapters for valves. Ftgs; ductile iron; coating, lining and ends to match pipe.
Valves:	Eccentric plug; same as exposed with extension stem and valve box. Coating shall be petrolatum based mastic and wrapping tapes.

(14" thru 24")

Pipe:	Ductile iron; same as 12 inch for pipe and ftgs. Conn; restrained bell and spigot with O-ring rubber gasket joint. Flanged adapters for valves. Ftgs; ductile iron; coating, lining and ends to match pipe.

PIPING SPECIFICATION SHEETS--PIPESPEC

Piping System:	12 (continued)
Valves:	Eccentric plug; same as exposed with extension stem and valve box. Coating shall be petrolatum based mastic and wrapping tapes.
(24" or larger) Pipe:	Reinforced concrete pipe with PVC lining. Conn; bell and spigot with rubber gasket joint. Joint design shall include provisions for double rubber gasket for pipe greater than or equal to 48-inch in diameter and a single or double gasket for smaller pipe. Ftgs; fabricated from same material as pipe; lining and ends to match pipe or manholes.
Valves:	None.

Remarks:

1. Verify that wall stiffness of the concrete pipe is sufficient to withstand external loads imposed from specified trenching, bedding and backfill operations. If required, modify trenching, bedding and backfill operations and/or increase the wall stiffness to satisfy actual conditions.

3.06 PIPING SPECIFICATION SHEETS–PIPESPEC

Piping Symbol/Service:	FM — Force Main PD — Pump Drainage	System—12A

Test Requirements:

Medium:	Water.
Pressure:	125 psig
Duration:	120 minutes

Gasket Requirements:

Flange:	Compressed gasketing consisting of organic fibers (Kevlar) and neoprene binder
Push-on/Mech Cpl:	Nitrile or Neoprene

Exposed Pipe and Valves:

(2" and smaller)

Pipe:	Steel; ASTM A53, galvanized. Conn; taper threaded, ANSI B1.20.1. Ftgs; malleable iron, ASTM A197, ANSI B16.3, Class 150, galvanized.
Valves:	Eccentric plug; Install valve with seat upstream. Swing check; Lunkenheimer 230, Crane 137, or equal.

(2 1/2" thru 8")

Pipe:	Steel; ASTM A53 ERW, Grade B, black, no lining. Conn; butt weld, grooved mech pipe coupling or flanged. Ftgs; malleable iron, ductile iron, or; ends to match pipe.
Valves:	Eccentric plug; Install valve with seat upstream. Swing check; spring loaded.

(10" thru 12")

Pipe:	Steel; same as 8 inch or AWWA C200, 3/16 inch thick, with lining. Conn; butt weld, mech pipe coupling, or flanged. Ftgs; steel, ASTM A234, or fabricated steel, AWWA C208; lining and ends to match pipe.
Valves:	Eccentric plug. Swing check; spring loaded.

(12" and larger)

Pipe:	Ductile iron; AWWA C115 with lining and 100-percent solids polyurethane or fusion bonded epoxy coating or tape wrapped conforming to AWWA C209. Conn; Flanged.

3.06 PIPING SPECIFICATION SHEETS--PIPESPEC

Piping System: 12 (continued)

Ftgs; ductile iron; coating, lining and ends to match pipe.

Valves: Eccentric plug; Install valve with seat upstream.
Swing check; spring loaded.

Buried and Encased Pipe and Valves:

(3" and smaller)

Pipe: PVC; ASTM D1784, Class 12454-B, ASTM D1785, Sch. 80. Provide magnetic tracer tape.
Conn; plain end; solvent weld with threaded or flanged adapters for valves.
Ftgs; PVC, Sch. 80, socket weld.

Valves: Eccentric plug; same as exposed with extension stem and valve box. Coating and lining shall be fusion bonded epoxy.

(4" thru 12")

Pipe: Ductile iron; AWWA C151 with lining and 100-percent solids polyurethane or fusion bonded epoxy coating or tape wrapped conforming to AWWA C209.
Conn; grooved end or restrained push-on rubber gasket joint. Flanged adapters for valves.
Ftgs; ductile iron; coating, lining and ends to match pipe.

Valves: Eccentric plug; same as exposed with extension stem and valve box. Coating and lining shall be fusion bonded epoxy.

(14" and larger within Pump Station Site)

Pipe: Ductile iron; same as 12 inch for pipe and ftgs.
Conn; restrained bell and spigot with O-ring rubber gasket joint. Flanged adapters for valves.
Ftgs; fabricated steel, mortar lined and coated.

Valves: Eccentric plug; same as exposed with extension stem and valve box. Coating and lining shall be fusion bonded epoxy.

(14" and larger outside of Pump Station Site)

Pipe: High Density Polyethylene (HDPE), ASTM D3350, DR 21.
Conn; butt fusion. Flanged adapters for valves.
Ftgs; molded or fabricated of the same pipe material as pipe, AWWA C906. SDR no greater than pipe. Pressure rating at least equal to pipe.

3.06 PIPING SPECIFICATION SHEETS--PIPESPEC

Piping System: 12 (continued)

Valves: Eccentric plug; same as exposed with extension stem and valve box. Coating and lining shall be fusion bonded epoxy.

3.06 PIPING SPECIFICATION SHEETS--PIPESPEC

Piping Symbol/Service:	DSF--Diesel Fuel LOR--Lube Oil Return LOS--Lube Oil Supply LOW--Lube Oil Waste	System--18

Test Requirements:

Medium:	Fuel oil.
Pressure:	150 psig (pressure piping)
5 psig (nonpressure piping)	
Duration:	60 minutes

Gasket Requirements:

Flange:	Compressed gasketing consisting of organic fibers (Kevlar) and neoprene binder
Push-On/Mech Cpl:	N/A

Exposed Pipe and Valves:

(2" and smaller)

Pipe:	Steel; ASTM A106, seamless, Grade B, black, pickled. Conn; threaded or socket weld with threaded adapters for valves. Ftgs; forged steel, ASTM A105, ANSI B16.11, pressure Class 3000, pickled.
Valves:	Lubricated plug; cast iron, PTFE coated plug, Nordstrom Fig. 142, Walworth Fig. 1796, or equal. Lift check; Crane 27TF, Lunkenheimer 231, or equal.

(2 1/2" thru 12")

Pipe:	Steel; ASTM A53, seamless, Grade B, black, pickled. Conn; butt weld, flanged for valves. Ftgs; steel, ASTM A234, seamless, ANSI B16.9, pickled; ends shall match pipe.
Valves:	Lubricated plug; cast iron with PTFE or molydisulfide coated plug, Nordstrom Fig. 143, Walworth Fig. 1797F, or equal, thru 5 inch; worm gear operator Rockwell Fig. 149, Walworth Fig. 1727F, or equal, 6 to 12 inches. Swing check; cast iron, flanged, Jenkins 1025-B2, Walworth 5344F, or equal.

Buried and Encased Pipe and Valves:

(2" and larger)

3.06 PIPING SPECIFICATION SHEETS--PIPESPEC

Piping System:	18 (continued)
Pipe:	Reinforced thermosetting resin (RTRP); Type 1. Double containment unless otherwise specified. Provide magnetic tracer tape. Conn; bonded bell and spigot or flanged. Ftgs; RTRP to match pipe.
Valves:	Lubricated plug; same as exposed with extension stem and valve box.

Remarks:

1. The cleaning (pickling) solution used shall comply with Mil-H-13528B. Immediately following pickling and rinsing procedures, steel pipe and fittings shall be coated inside and outside with a rust and corrosion preventative system, and the ends sealed to prevent the entry of dirt.
2. Provide double contained piping for all piping. Carrier and secondary piping shall be hydrostatically tested as specified in this section.
3. Low pressure air testing of approximately 5 psig is allowable for secondary containment piping and is the preferred method of testing. A 5 psig test will attest to the integrity of the system. If secondary containment piping is specified, add the following remark: "Low pressure air testing of approximately 5 psig is allowed for testing the secondary containment piping."

3.06 PIPING SPECIFICATION SHEETS--PIPESPEC

Piping Symbol/Service: CSO--Caustic Soda System--19
HOCL--Sodium Hypochlorite

Test Requirements:
- Medium: Water.
- Pressure: 150 psig
- Duration: 120 minutes

Gasket Requirements:
- Flange: PTFE bonded EPDM, full-face gaskets, ANSI B16.1.
- Push-on/Mech Cpl: N/A

Exposed Pipe and Valves:
(See drawings for pipe size and valve type)

(All sizes)
- Pipe: PVC; ASTM D1784, Class 12454-B, NSF certified, ASTM D1785, Sch. 80. Pipe and fittings exposed to sunlight shall be painted.
  Conn; plain end, solvent weld, flanged for valves 3 inch and larger.
  Ftgs; PVC, Sch. 80, solvent weld.

(4" and less)
- Valves: Ball; PVC Chemtrol Tru Bloc TU Series, Asahi/America Duo Bloc TU Series, GSR TU Series, or equal, with PTFE seats and EPDM O-rings.
  Diaphragm; PVC body, Chemtrol Series PD, Posacon 677, Asahi/America, or equal with EPDM or PTFE diaphragm.
  Ball check; PVC body, Chemtrol Series BC, Asahi/America, or equal with EPDM or PTFE seats/seals.

(5" and larger)
- Valves: Diaphragm; ITT Dia-Flo 2558-2-M, Hills-McCanna 0649-1-38, or equal.
  Swing or ball check; fully lined valve body; fully coated swing check flapper or ball check ball; lining and coating shall be Hypalon or fluorinated ethylene propylene. Valve and Primer Co. APCO Series 100R, Peabody Dore Model 770, or equal.

Buried and Encased Pipe and Valves:

(All sizes)
- Pipe: PVC; same as exposed. Provide magnetic tracer tape.
  Conn; same as exposed.
  Ftgs; same as exposed.

3.06 PIPING SPECIFICATION SHEETS--PIPESPEC

Piping System: 19 (continued)

(2" and less)
Valves: Ball; same as exposed with extension stem and valve box.

(2 1/2" and larger)
Valves: Diaphragm; same as exposed with extension stem and valve box.

Remarks:

1. Ball valves and threaded fittings are not permitted on chemical service.

2. Diaphragm valves shall be provided with PVDF limits with EPDM Teflon Diaphragm.

3. Diaphragm valves 4 inches and smaller shall be provided with PTFE diaphragms; valves 5 inches and larger shall be provided with Hypalon or PDVF linings with PTFE diaphragms.

4. The procedure for making solvent-cemented joints with schedule 80 PVC pipe and fittings shall strictly conform to ASTM D2855. The solvent weld cement for joints shall only be IPS WELD-ON® 724 glue. The glue is labeled for CPVC, but is also rated for PVC. A representative of the PVC pipe company shall provide training to certify the plumbers.

5. Closer spacing of pipe supports shall be provided for plastic pipe operating with chemical solutions. For high temperature caustic soda service, add the following remark: "Pipe supports for caustic soda piping shall be 60 percent closer than maximum spacing specified for plastic piping."

6. Piping outside of containment areas shall be double contained. Carrier and secondary piping shall be hydrostatically tested as specified in this section.

7. Joints shall be true union for all PVC valves.

1.06 PIPING SPECIFICATION SHEETS—PIPESPEC

Piping Symbol/Service: FA–Foul Air System–22

Test Requirements:

Medium:	Air
Pressure:	20 inches water column
Duration:	60 minutes

Gasket Requirements, 16” and smaller:

Flange:	Gylon gasketing, Garlock style 3504
Push-on/Mech Cpl:	PTFE

Exposed Pipe and Valves:

(24" and smaller)

Pipe:	Fiberglass Reinforced Plastic; ASTM D883, filament wound construction. Conn; butt or mitered weld, flanged for valves. Ftgs; molded or fabricated as the same material as the pipe.
Valves:	Butterfly

Buried and Encased Pipe and Valves:

(24" and smaller)

Pipe:	HDPE; AWWA C906. Conn; thermal butt-fusion welded with flanged adapters for valves. Ftgs; HDPE AWWA C906, fabricated; ends and SDR to match pipe
Valves:	Butterfly; same as exposed with extension stem and valve box. Coating shall be petrolatum based mastic and wrapping tapes.

Remarks:

1. All piping shall be sloped to drain into wet well.

3.06 PIPING SPECIFICATION SHEETS--PIPESPEC

Piping Symbol/Service:	D--Drain SD--Sanitary Drain STD--Storm Drain V--Vent	System--24

Test Requirements:

Medium:	In accordance with Section 712, Uniform Plumbing Code.
Pressure:	In accordance with Section 712, Uniform Plumbing Code.
Duration:	In accordance with Section 712, Uniform Plumbing Code.

Gasket Requirements:

Flange:	Compressed gasketing consisting of organic fibers (Kevlar) and neoprene binder
Push-on/Mech Cpl:	Nitrile or neoprene

Exposed Pipe and Valves:

(3" and smaller)

Pipe:	Steel; ASTM A53, galvanized. Conn; taper threaded, ANSI B1.20.1. Ftgs; cast iron, threaded drainage fittings, ASTM A126, ANSI B16.12, galvanized.
Valves:	None

(4" thru 12")

Pipe:	Cast iron soil pipe (CISP); ASTM A74. Conn; service hub and spigot compression type or hubless cast iron sanitary system per CISPI 301. Ftgs; CISP, ASTM A74, joint options to match pipe.
Valves:	None

(14" and larger)

Pipe:	Ductile iron; AWWA C151. Conn; flanged or mechanical. Ftgs; ductile iron; ends to match pipe.
Valves:	None

Buried and Encased Pipe and Valves Under and 5 Feet Outside Building

(12" and smaller)

Pipe:	Cast iron soil pipe (CISP); same as exposed.

3.06 PIPING SPECIFICATION SHEETS--PIPESPEC

Piping System: 24 (continued)

Valves: None

(14" and larger)
Pipe: Ductile iron; same as exposed.

Valves: None

Buried and Encased Pipe and Valves Beyond 5 Feet Outside Building

(8" and smaller)
Pipe: PVC; ASTM D1784, Class 12454-B, ASTM D2665, Sch. 40.
Provide magnetic tracer tape.
Conn; plain end, solvent weld.
Ftgs; PVC, socket type, DWV, ASTM D2665.

Valves: None

(10" and 12")
Pipe: PVC; ASTM D3034, SDR 35. Provide magnetic tracer tape.
Conn; Push-on with nitrile gasket.
Ftgs; PVC or IPS cast iron; ends to match pipe.

Valves: None

(14" and larger)
Pipe: Reinforced concrete pipe (RCP).
Conn; ASTM C443, rubber gasket type.
Ftgs; concrete manhole as specified on the drawings.

Valves: None

Remarks:

1. PVC pipe, 12 inches and smaller, is specified for buried service beyond five feet outside buildings. Governing local building and plumbing codes must be reviewed for compliance, and client preference must be determined before using this PIPESPEC.

2. Pipe slope requirements and direction of flow shall be shown on the drawings. For building drainage, piping should be provided with a minimum downward slope of 1/4 inch per foot in the direction of flow.

3. Copper condensate drains shall be specified on the drawings for HVAC equipment. If HVAC equipment condensate drains are required, add the following specification to remarks:

3.06 PIPING SPECIFICATION SHEETS--PIPESPEC

Piping System: 24 (continued)

"HVAC equipment condensate drains shall be copper tube; ASTM B88, Type M, drawn. Fittings shall be wrought copper or bronze, ANSI B16.22. Connections shall be solder type with threaded adapters for equipment connections where required."

3.06 PIPING SPECIFICATION SHEETS--PIPESPEC

Piping Symbol/Service: CD–Chemical Drain System--25
VC–Chemical Vent

Test Requirements:

Medium: In accordance with Section 712, Uniform Plumbing Code.

Pressure: In accordance with Section 712, Uniform Plumbing Code.

Duration: In accordance with Section 712, Uniform Plumbing Code.

Gasket Requirements:

Flange: N/A
Push-on/Mech Cpl: N/A

Exposed Pipe and Valves:
(See drawings for pipe size and valve type)

(All sizes)

Pipe: PP; ASTM D4101, Sch. 40, flame retardant.
Conn; electrical fusion coils energized by a variable low-voltage power supply to completely fuse the interface between the pipe and socket to form a completely homogenous structure. Mechanical joint fittings may be used under bench or in exposed locations where future disassembly is desired.
Ftgs; PP, socket type coil fused DWV.

Valves: None

Buried and Encased Pipe and Valves:

Pipe: PP; same as exposed. Provide magnetic tracer tape.
Conn; same as exposed.
Ftgs; same as exposed.

Valves: None.

Remarks: None.

3.06 PIPING SPECIFICATION SHEETS--PIPESPEC

Piping Symbol/Service: 2WL--Landscape Irrigation System--29

Test Requirements:

Medium:	Water.
Pressure:	125 psig
Duration:	120 minutes

Gasket Requirements:

Flange:	Compressed gasketing consisting of organic fibers (Kevlar) and neoprene binder
Flush-on/Mech Cpl:	Nitrile or Neoprene

Exposed Pipe and Valves:
(See drawings for pipe size and valve type)

(2" and smaller)

Pipe:	PVC; ASTM D1784, Class 12454-B, NSF certified, ASTM D1785, Sch. 80. Pipe and fittings exposed to sunlight shall be painted. Conn; plain end; solvent weld with threaded adapters for valves. Ftgs; PVC, Sch. 80, socket type.
Valves:	Ball; Jamesbury Fig. 351, Nibco T-580, or equal. Globe; Crane 7TF or 17TF, Lunkenheimer 123 or 214, or equal. Swing check; Crane 137, Lunkenheimer 230, or equal.

(2 1/2" thru 8")

Pipe:	Steel; ASTM A53, ERW, Grade B, black, no lining. Conn; butt weld, grooved mech pipe coupling or flanged. Ftgs; malleable iron, ductile iron, or steel; ends to match pipe.
Valves:	Butterfly; ref. spec Section 15103. Substitute Type B on 2-1/2-inch lines. Swing check; spring loaded.

(10" and larger)

Pipe:	Steel; same as 8 inch or AWWA C200, 3/16 inch thick with lining. Conn; butt weld or flanged. Ftgs; steel, ASTM A234, or fabricated steel, AWWA C208; lining and ends to match pipe.
Valves:	Butterfly. Swing check; spring loaded.

Buried and Encased Pipe and Valves:

(6" and smaller)

3.06 PIPING SPECIFICATION SHEETS--PIPESPEC

Piping System: 29 (continued)

Pipe: PVC; ASTM D1784, Class 12454-B, NSF certified, ASTM D2241, SDR 21.
Conn; plain end; solvent weld with threaded or flanged adapters for valves.
Ftgs; PVC, Sch. 80, socket type.

(All sizes)
Valves: Butterfly.
Swing check; spring loaded.

(8" thru 12")
Pipe: PVC; same as 6 inch.
Conn; push-on gasketed joint with flanged adapters for valves.
Ftgs; steel or ductile iron, IPS, push-on or mechanical joint with standard lining and coating.

Remarks: None.

3.06 PIPING SPECIFICATION SHEETS--PIPESPEC

Piping Symbol/Service EE--Engine Exhaust System--31

Test Requirements:

Medium:	None
Pressure:	None
Duration:	None

Gasket Requirements:

Flange:	See Remarks
Push-on/Mech Cpl:	N/A

Exposed Pipe and Valves:
(See drawings for pipe size)

All Pipe:	Stainless Steel; ASTM A312, Type 321 or 316L seamless, Schedule 10S, welded. Conn; butt weld, flanged for equipment connections. Ftgs; ASTM A403, material, thickness, and end connections to match pipe.

Remarks:

1. Pipe and fittings shall be insulated as specified with removable blanket type insulation.

2. Flange gasket shall be flat, full-face, graphoil suitable for temperatures to 1200 degrees F.

3. Engine exhaust piping shall be provided with stainless steel formed metal bellows type expansion joints.

4. Provide plugged sample ports as required for testing.

I. ATTACHMENT

HVAC Design

I.1 Purpose

The purpose of this document is to guide the pump station final design teams and to ensure consistent quality and similar facilities for ease of operation and maintenance. This document is meant to be a working document for the design teams such that during the design, changes can be made based on design team review and consensus.

I.2 Codes and Standards

Ventilating, and air conditioning (HVAC) design for the pump stations shall comply with the California Building Code (CBC), the California Mechanical Code (CMC), the California Energy Code (CEC), the American Society of Heating Refrigerating and Air Conditioning Engineers (ASHRAE), and the National Fire Protection Association (NFPA).

HVAC construction shall be performed in accordance with the most current version of the following codes and standards:

- American National Standards Institute (ANSI) standards.
- National Fire Protection Association: Standard for Fire Protection in Wastewater Treatment and Collection Facilities (NFPA 820)
- California Building Code (California Code of Regulations, Title 24, Part 2)
- California Mechanical Code (California Code of Regulations, Title 24, Part 4)
- California Energy Code (California Code of Regulations, Title 24, Part 6)
- Sheet Metal and Air Conditioner Contractor's National Association (SMACNA) standards.

I.3 Definitions

1. Conditioned Space – A space that is directly or indirectly conditioned with mechanical heating or cooling, unless it is a process space.
2. Process Space – A space that is thermostatically controlled to maintain a process environment heating temperature less than 55 degrees Fahrenheit, or to maintain a process environment cooling temperature greater than 90 degrees Fahrenheit for the whole space that the system serves. The space conditioning is not for human comfort but for equipment protection. Process spaces are not considered conditioned spaces by definition.
3. Physical Separation - A gas-tight partition between two adjacent spaces, or two nonadjacent spaces, with no means of gas communication between the spaces. Personnel entry to the separate spaces is by individual, grade-level exterior access ports with no physical connection between the two entrances.
4. Ventilation Rate – a value based on the number of air changes per hour, and calculated using 100 percent outside air for the supply air that is exhausted. The number of air changes per hour is calculated on the basis of the maximum aggregate volume of the space to be ventilated.

I.4 Design Criteria

HVAC systems shall be designed to provide ventilation for air quality, personnel safety, and equipment protection. All ventilated spaces shall be served by both supply and exhaust fans. All of the spaces shall be designed as process or unconditioned spaces. Materials and coatings will be selected for corrosion resistance in marine environments. Powered equipment shall be selected for quiet operation, but noise attenuation measures will not be incorporated.

Dedicated electrical rooms with VFDs shall be served with a dedicated HVAC system for equipment cooling, including mechanical filtration, chemical filtration, and positive pressure to maintain a clean, noncorrosive atmosphere.

I.5 Design Conditions

The HVAC systems will be designed for the following outdoor temperature conditions listed in Table I-1 based on the ASHRAE climatic data for the San Francisco International Airport:

Table I-1. HVAC Outdoor Temperature Design Conditions

Table I-1. HVAC Outdoor Temperature Design Conditions	
Winter design dry bulb temperature	39 degrees F (ASHRAE 99.6% heating design condition)
Summer design dry bulb temperature	83 degrees F (ASHRAE 0.4% cooling design condition)
Summer mean coincident wet bulb temperature	63 degrees F (ASHRAE 0.4% wet bulb design condition)

The pump stations will be designed as unconditioned spaces. The indoor temperature design criteria are listed below in Table I-2.

Table I-2. HVAC Indoor Temperature Design Conditions	
Wet well	
Heating	None, ventilation only
Cooling	None, ventilation only
Valve vault	
Heating	None
Cooling	None
Electrical building	
Heating	None
Cooling	90 degrees F

I.6 Ventilation Rates

Wet well spaces will be ventilated at 12 air changes or more per hour, and valve vault spaces will not be ventilated. These ventilation rates will allow all spaces in the pump stations to have an electrical hazard classification of "Class I, Division 2". Physical separation shall be provided between each wet well and between the wet well and associated valve vault.

I.7 HVAC Equipment

Roof Fans. Roof fans will be direct drive if possible to minimize maintenance. Roof fans will be specified with manufacturer-supplied mounting curbs. Fans equipped with ducting will be centrifugal type. Supply fans will be specified with disposable particulate filters.

Air Conditioners. Air conditioners,if required may be packaged, split system, or wall-mounted.

Ducting. All ductwork and duct accessories will be specified as aluminum for corrosion resistance. Ductwork will be fabricated according to SMACNA. Access doors will be provided adjacent to all pieces of duct-mounted equipment or instrumentation. Ductwork insulation is not an anticipated requirement.

Louvers. Intake and exhaust louvers will be provided with bird screens or insect screens. Louvers will be sized for a face velocity of 500 to 750 feet per minute, less than 0.10 inch water column pressure drop, and no water penetration. Louvers will be of aluminum construction with an anti-corrosion coating.

Grilles, Registers, and Diffusers. Grilles, registers, and diffusers shall be of aluminum construction and shall be sized in accordance with the manufacturer's recommendations for noise level, air velocity, pressure drop, and throw.

I.8 HVAC Controls

Ventilation systems shall run continuously. Cooling functions will be controlled by local thermostats. Ventilation systems used to downgrade the electrical classification of a space will be provided with ventilation failure alarms.

I.9 Standard Details

Standard details for each pump station are located in Attachment N.

This page intentionally left blank.

J. ATTACHMENT

Electrical and Power

This section describes the electrical design criteria and construction standards for the design of the Silicon Valley Clean Water (SVCW) Pump Stations as noted herein. Included in the design criteria are the electrical distribution system, the standby generator system and automatic transfer switch, switchboards, motor control centers, motor starters, variable frequency drives (VFDs), conduit and wiring, etc.

The project consists of three existing pump stations,

1. Menlo Park S.D. Pump Station (PS1)
2. Redwood City Pump Station (PS2)
3. San Carlos Pump Station (PS3)

These three pump stations will require electrical equipment upgrades and replacement to meet the increased pumping capacity and reliability requirements. Additionally, the upgraded pump stations will have larger pump motors than the existing and will require a new standby generator to replace the existing.

It is assumed that the existing PG&E electrical service does not have the capacity for the increased pumping loads. Therefore, each pump station may require replacement of the existing utility transformer with a larger unit. During final design the size of the service requirements for the new pump station loads should be verified with the existing utility transformer capacity and coordinated with PG&E.

If this document overlaps or conflicts with governing codes, standards or manufacturer's directions and instructions, the more restrictive interpretation or requirements shall be followed.

Where required the removal of existing power distribution equipment should be indicated on the drawings. Contractor should disconnect and remove in an orderly, planned, approved manner to facilitate continuous operation of the existing pump station. Electrical work shall be coordinated with mechanical work to minimize outages, downtime, altered plant operations, etc. All existing electrical equipment to be removed under this project shall be presented to SVCW for right of refusal. If SVCW elects to salvage the contractor shall remove and place the equipment at a location on the pump station site. If SVCW elects to refuse, the contractor shall remove and dispose of said equipment.

J.1 Purpose

The purpose of this document is to guide the pump station final design teams and to ensure consistent quality and similar facilities for ease of operation and maintenance. This document is meant to be a working document for the design teams such that during the design, changes can be made based on design team review and consensus.

J.2 Standard Definitions and Abbreviations

1. Authority Having Jurisdiction (AHJ) – An organization, office, or individual responsible for enforcing the requirements of a code or standard, or for approving equipment, materials, an installation, or a procedure.
2. Corrosive Location – An area normally subject to corrosive gasses or liquids. Material types for enclosures, conduit and conduit supports shall be compatible with corrosive gasses or liquids and not subject to premature failure.
3. Damp Location - Locations protected from weather and not subject to saturation with water or other liquids but subject to moderate degrees of moisture. Examples of such locations include partially protected locations under canopies, marquees, roofed open porches, and like locations, and interior locations subject to moderate degrees of moisture, such as some basements, some barns and some cold-storage warehouses.
4. Dry Location – A location not normally subject to dampness or wetness. A location classified as dry may be temporarily subject to dampness or wetness, as in the case of a building under construction.
5. GRS-PVC (conduit) – Galvanized Rigid Steel with Polyvinyl Chloride coating.
6. RAC-PVC (conduit) – Rigid Aluminum Conduit with Polyvinyl Chloride coating.
7. Hazardous (Classified) Location – A location that is classified based on the properties of the flammable vapors, or gases, combustible dusts, or fibers that might be present and the likelihood that a flammable or combustible concentration or quantity is present. The following NFPA 820 hazardous location classifications are as follows:

    a. Class I, Division 1 Location: A location (1) in which ignitable concentrations of flammable gases, flammable liquid-produced vapors, or combustible liquid-produced vapors can exist under normal operating conditions; or (2) in which ignitable concentrations of such flammable gases, flammable liquid-produced vapors, or combustible liquids above their flash points may exist frequently because of repair or maintenance operations or because of leakage; or (3) in which breakdown of faulty operation of equipment or processes might also cause simultaneous failure of electrical equipment to become a source of ignition. Classification subject to NFPA 820.

    b. Class I, Division 2 Location: A location (1) in which volatile flammable gases, flammable liquid-produced vapors, or combustible liquid-produced vapors are handled, processed, or used, but in which the liquids, vapors or gases will normally be confined within closed containers or closed systems from which they can escape only in case of accidental rupture or breakdown of such containers or systems, or in case of abnormal operation of equipment; (2) in which ignitable concentrations of flammable gases, flammable liquid-produced vapors, or combustible liquid-produced vapors are normally prevented by positive mechanical ventilation and which might become hazardous through failure or abnormal operation of the ventilation equipment; or (3) that is adjacent to a Class I, Division 1 location and to which ignitable concentrations of flammable gases, flammable liquid-produced vapors, or combustible liquid-produced vapors above their flash point might occasionally be communicated unless such communication is prevented by adequate positive-pressure ventilation from a source of clean air and effective safeguards against ventilation failure are provided. Classification subject to NFPA 820.

c. Electrical conduits and their associated enclosures separated from process fluids or gasses by a single seal or barrier are classified as a Class I, Division 2 location if the outside of the conduit and enclosures is a nonhazardous (unclassified) location. Classification subject to NFPA 820.

8. I/O – Input and Output – Used to describe any program, operation or device that transfers data to or from a computer and to or from a peripheral device. Every transfer is an output from one device and an input into another.
9. Intrinsic Safety – A type of protection in which a portion of the electrical system contains only intrinsically safe equipment (apparatus, circuits, and wiring) that is incapable of causing ignition in the surrounding atmosphere. No single device or wiring is intrinsically safe by itself (except for battery-operated self-contained apparatus such as portable pagers, transceivers, gas detectors, etc., which are specifically designed as intrinsically safe self-contained devices) but is intrinsically safe only when employed in a properly designed intrinsically safe system.

   a. Intrinsic Safety Barrier: A component containing a network designed to limit the energy (voltage and current) available to the protected circuit in the hazardous (classified) location under specified fault conditions.
   b. Intrinsically Safe Circuit: A circuit in which any spark or thermal effect, produced either normally or in specified fault conditions, is incapable of releasing sufficient electrical or thermal energy to cause ignition of a specific hazardous atmospheric mixture in its most easily ignitable concentration.
   c. Intrinsically Safe Equipment (apparatus, circuits, and wiring): Equipment and wiring that, under normal or abnormal conditions, are incapable of releasing sufficient electrical or thermal energy to cause ignition of a specific hazardous atmospheric mixture in its most easily ignitable concentration.
10.
11. Labeled Equipment – Equipment or materials, to which has been attached a label, symbol, or other identifying mark of an organization concerned with product evaluation, that may maintain periodic inspection of the production of labeled equipment or materials, and by whose labeling the manufacturer indicates compliance with appropriate standards or performance in a specified manner.
12. LED – Light Emitting Diode
13. Listed – Equipment, materials or services included in a list published by an organization acceptable to the AHJ that is concerned with evaluation of products, that conducts periodic inspection of the production of the listed equipment or materials, and whose listing states either that the equipment, material or service meets appropriate designated standards, or has been tested and found suitable for a specified purpose.
14. MCC – Motor control center – A means to provide a convenient method for grouping motor control, as well as associated distribution equipment.
15. PLC – Programmable Logic Controller – A digital computer used for automation of electromechanical processes.
16. PPE – Personal Protective Equipment – Refers to protective clothing, helmets, goggles, or other garments or equipment designed to protect the wearer's body from injury.

17. Qualified Person – One who has skills and knowledge related to the construction and operation of the electrical equipment and installations and has received safety training to recognize and avoid the hazards involved.

18. SCADA – Supervisory Control and Data Acquisition – Type of industrial control system, computer controlled system that monitor and control industrial processes that exist in the physical world.
19. Short Circuit Rating – The prospective symmetrical fault current at a nominal voltage to which an apparatus or system can be connected without sustaining damage exceeding defined acceptance criteria.
20. THD – Total Harmonic Distortion.
21. UPS – Uninterruptable Power Supply.
22. VFD – Variable Frequency Drive.
23. Wet Location – Installations under ground or in concrete slabs in direct contact with the earth; in locations subject to saturation with water or other liquids such as vehicle washing areas or areas requiring wash down by operations staff; or in unprotected locations exposed to weather.

J.3 Codes and Standards

1. Electrical design and construction shall comply with the National Electrical Code, the California Electrical Code, the Occupational Safety and Health Act, and the requirements of local codes in effect at the project site. All electrical construction shall be performed in the accordance with the most current version of the following codes and standards:
   - American National Standards Institute (ANSI) standards.
   - Insulated Cable Engineers Association (ICEA) standards.
   - Institute of Electrical and Electron Engineers Association (IEEE) standards.
   - Instrument Society of America (ISA) standards.
   - California Electrical Code (CEC), 2013, based on the 2011 National Electrical Code (NEC)
   - National Fire Protection Agency (NFPA 70E) Standard for Electrical Safety in the Workplace.
   - National Fire Protection Agency (NFPA 820) Fire Protection in Wastewater Treatment and Collection Facilities.
   - National Electrical Manufacturers Association (NEMA) standards.
   - Occupational Safety and Health Administration (OSHA) standards.
   - Acceptance Testing Specifications of Electrical Power Distribution Equipment and Systems, International Electrical Testing Association (NETA).
   - Underwriters Laboratories, Inc.
   - Insulated Power Cable Engineers Association (IPCEA)

2. In instances where two or more codes are at variance, the most restrictive requirements shall apply. Codes and standards referenced shall be considered minimum acceptable work.
3. All work shall also be performed in accordance with SVCW, State, County or Owner standards and local Utility codes.

J.4 ELECTRICAL DESIGN AND CONSTRUCTION STANDARDS

J.4.1 General

Electrical systems shall be heavy-duty industrial type with design emphasis placed on safety, reliability, maintainability and economics.

A new operationally reliable and cost effective electrical power system will be required to safely distribute power for the highest projected electrical demand at the modified pump station facility.

The equipment providing electrical power distribution must provide the safest conditions possible for normal electrical operation, for maintenance procedures and for pump station operation during a primary source power outage. This includes providing ample working clearances, ability to isolate equipment, spare parts storage and strict adherence to the latest published requirements and recommendations of NFPA 70E, Electrical Safety in the Workplace.

It is the intent to secure the highest quality in all materials and equipment in order to facilitate operation and maintenance of the pump stations. All equipment and materials shall be new and the products of reputable suppliers with adequate experience in the manufacture of these particular items. For uniformity and standardization, only one manufacturer will be accepted for the motor control centers and power distribution equipment: Eaton provide the manufacturer's latest design conforming to these standards. All electrical equipment shall be UL listed.

All equipment shall be designed for the service intended and shall be of rugged construction, of ample strength for all stresses which may occur during fabrication, transportation, erection and continuous or intermittent operation. All equipment shall be adequately stayed, braced and anchored and shall be installed in a neat and workmanlike manner. Appearance and safety, as well as utility, shall be given consideration in the design of details. All components and devices installed shall be standard items of industrial grade and shall be of sturdy and durable construction suitable for long, trouble-free service. Light duty, fragile, or competitive grade devices are not acceptable for use.

Electrical and instrument modifications and additions will be made at an operational pump station which is continuously pumping wastewater. Contractor shall schedule all required work with SVCW, including all shutdown periods. Each shutdown shall be scheduled to minimize disruption of pump station operations. Shutdowns may have to be scheduled outside of normal working hours when pump station flow is at a minimum. The work shall not disrupt any existing operations without prior approval by SVCW.

J.4.2 Safety

Design shall include Contractor requirements to provide services for Short Circuit, Coordination and Arc Flash Analysis for all new power distribution equipment. Design shall meet the requirements of the NEC and NFPA 70E, however design of the power distribution system should consider reduction of the Category level to the extent possible. Design features shall provide the inclusion of infrared (IR) options such as IR view ports that would allow Thermo graphic Imaging to be done with Category 0 PPE for critical areas of power distribution switchboards, and other points of distribution.

Classified areas shall be identified and designed to meet the requirements of NFPA 820.

J.4.3 Reliability

Design shall include reliability of the power distribution system. Reliability is defined as a measurement of the ability of a component or system to perform its designated function without failure. When designing the electrical system the following elements shall be incorporated:

- Standby Generator - A standby generator provides capacity (sufficient to power the pump stations vital components) in case of failure of normal plant power.
- Redundancy - The redundancy of vital components within a system ensures reliability of the power supply to the vital component loads by providing alternate paths for the electrical power supply. MCC loads will be split between two MCC's to provide 50 percent redundancy to the system upon failure of one MCC.
- Sizing - Correct sizing of vital components of the electrical distribution system prevent premature component failure and maintain reliability of the system.
- Coordination - Electrical protective devices need to be sized and set to provide fast isolation of electrical faults and minimum interference with the remaining healthy system. Poor coordination between protective devices reduces the reliability of the system.
- Protection - Judicious placement of equipment or physical protection of vital components of the electrical system prevent possible physical damage.

Where power feeder circuits can be transferred from one power source to another, a transfer switch will be provided to assure that the two power sources cannot be cross-connected, if unsynchronized. Automatic transfer should be provided to ensure minimal interruption for pumping performance. The control panel power source and pump power source should both be transferred to the standby power source. The actuation of an automatic transfer switch should be alarmed and annunciated, with these signals passed to the SCADA system.

J.5 DESIGN GUIDELINES

J.5.1 Power Distribution Design

J.5.1.1 Pump Station Load Capacity

The existing load capacity at the pump stations will not be suitable for the new equipment loads being proposed for this project. A detailed load analysis and calculations will be required in order to determine the size of the new service and rating of the power distribution system at each pump station. The load analysis will be based on the NEC requirements and operational requirements of the pump station.

A minimum of 20 percent space and 20 percent spare circuit breakers shall be provided in each switchboard, motor control center and panelboard.

On all transformers, 25 percent spare loading shall be provided. The following will be included in the load analysis:

- Perform calculations for connected load (amp), maximum demand load (amp) and standby power loads (amp).
- Utility service size (amp) and voltage minimum requirements.

J.5.1.2 Short Circuit Calculations

Short circuit calculations using the simplified "infinite bus" formula shall be completed and provided to determine the available interrupting circuit (AIC) for determining the AIC rating of the power distribution equipment

Results are conservative since the Power Utility systems do not have infinite short circuit current.

J.5.1.3 Distribution

Provide 600V class service entrance rated switchboard to accept ±480V power from the utility company. Service entrance switchboard and service equipment from the utility shall be in strict conformance with the utility company requirements for incoming cables, metering and main overcurrent protection type, and coordination. The distribution equipment will be located indoors.

J.5.1.4 Utilization Voltage

Utilization voltage shall be as follows:

- 480V, three phase (3Ø), 60Hz for all motors 1 HP to 500 HP.
- 120/240V for controls, receptacles and lighting circuits.
- 24VDC for low voltage control and signals.

J.5.1.5 Power Quality

Voltage Regulation shall include the following criteria:

- Maintain voltage regulation to ±3 percent under normal conditions
- Limit starting voltage drop to less than 10 percent
- Limit running voltage drop to less than 3 percent for branch circuitry and not exceeding 5 percent for total at subject operating voltage

Harmonics shall include the following criteria:

- Mitigate harmonic interference with sensitive equipment as necessary
- Limit individual current harmonics to not greater than the values listed in Table 10.3 of IEEE 519 for the ratio of short circuit to load current that is applicable to each point of common coupling. Limit total voltage harmonic distortion to not greater than 5 percent at this point.
- Surge Protection Device shall include the following criteria:
- Properly size surge protective device for the equipment within the design.
- Provide surge protective device at all switchboards. Surge protection devices shall be UL Listed with class/category ratings as required to meet the Lightning Protection Institute certifications.
- The surge protection device shall be rated for use on and above 480V, three phase Wye systems. The nominal line voltage of the surge suppressor shall be 277V with a maximum continuous line voltage of 320V.

- Provide a circuit breaker with each surge device. Locate surge protective device so that the indicating lights are viewable without removing panels.

J.5.1.6 Voltage Drop

Voltage drop calculations confirm available voltage at equipment during motor start and run conditions. Calculations shall be done for conductor runs over 250 feet.

J.5.2 Utility Coordination

The Design engineer shall take the lead role in coordination with the Utility during final design.

J.5.3 Power Monitoring

Utility and standby power shall be continuously monitored by a microprocessor-based power monitoring instrument, networked to the pump station control system and monitored via the pump station control system.

The power monitor display unit shall be door mounted with the meter module mounted inside a transition section. The meter module shall transmit all data via Ethernet to the pump station control system for monitoring all parameters.

The units shall be self-powered excluding power monitors that have the features of power quality and harmonic analysis. Power monitors shall be Rockwell 1426 PowerMonitor 5000,or Approved Equal.

J.5.4 Standby Power

A new generator shall be provided at each pump station to provide emergency standby power to essential equipment when normal power (utility power) is not available. The generator will be located indoors and be a skid mounted unit. A separate fuel storage tank with provision for fuel transfer during periods of generator operation will be located outdoors and provide 24 hours of fuel capacity at 100 percent generator loading.

The designer shall coordinate with the City Fire Marshal in regards to any applicable fire codes and required monitoring for the standby power generator and fuel storage tank.

The fuel storage tank shall be located on the property such that it meets the requirements of NFPA 30 (Flammable and Combustible Liquids Code) for minimum distances from the property line and buildings.

Transfer of standby power shall be done using an automatic transfer switch, open transition with non-paralleling capabilities.

The standby power generator shall be sized based on the load analysis for standby power loads and the stepping sequence for starting essential loads. The size will be determined in kilowatts (kW) / kilovolt-amps (kVA). In addition to the standby power load analysis the following will be used to size the generator:

- Maximum voltage dip of 20 percent.
- Engine generator sets shall be sized at a load capacity not to exceed 75 percent of nameplate rating.
- Generator shall be sized for motor starting requirements and harmonic content of the load (variable frequency drives).
- Ambient temperature conditions.

The standby power system (generator, transfer equipment, schemes, etc.) shall meet the requirements of NEC Article 701, Legally Required Standby Systems. Standby system shall be a Class rating in accordance with Chapter 2 specified run time, Type 10, Level 1.

The system shall meet the requirements of NFPA 704 Hazard Identification System. Diamond indicating the hazards associated with the fuel being stored.

Generator shall be EPA Certified and meet expected emissions tier requirements at the time of installation for the local air quality management district.

Best available control technology shall be used as it pertains to emissions systems.

The engine shall utilize only No. 2 diesel fuel approved by local air quality authorities.

An Ethernet communication link from the generator control panel to the pump station control system for monitoring all operating parameters and alarms shall be included. SCADA screens shall be developed for status, trends, alarms etc. Dry contacts shall be provided for critical alarms and basic running conditions.

The major equipment emergency standby power requirements for each pump station are listed in Table J-1.

Table J-1. Major Equipment Emergency Standby Power Requirements

Pump Station	Model	Power Required per Pump (HP)	Pump Motor Nominal Power (HP)	Worst case power required (HP)	Type	Max Pumps on Duty
PS1 – Menlo Park	Vaughan SE10R (13.7")	75	75	Same	Dry weather	3
	Flygt N3356	215	250	Same	Wet Weather	3
PS2 – Redwood City	Vaughan SE10R (14")	100	100	Same	Dry weather	3
	Flygt C3531 (840)	330	350	Same	Wet Weather	3
PS3 – San Carlos	Vaughan HE10R12 (15")	40	40	Same	Dry weather	0
	Flygt 3531 (1040)	250	250	300 (approx 257 needed)[1]	Wet Weather	3

[1]Based on model run pressure head of 71.5 feet at PS3 with 42.9 mgd from PS3 and 38.0 mgd from PS2 going to WWTP.

The generator package shall be specified to be a complete operation package consisting of the engine, alternator, controls, support frame, exhaust system including muffler and the fuel system including the main storage tank as well as a day tank if required.

The generator system shall include provision for automatic scheduled exercise operation of the engine and alternator, with load bank sized to allow loading the alternator to a minimum of 30 percent of its rated capacity.

Current regulatory agencies have established air quality standards for the engine exhaust from emergency generators and the generator system will be specified to be EPA certified for stationary emergency applications. Further consideration shall be made for the local permitting requirements for new installation within specified distances of public education facilities. Final design will require the investigation of each pump station location with regard to its proximity to these facilities.

Diesel Generator Fuel Storage Tank

A dedicated diesel fuel storage tank shall be provided at each pump station. The fuel tank shall be provided with the following:

- The generator fuel tank shall be UL 2085 listed.
- Fuel tank sized for 24hrs at 100 percent load
- Analog level of fuel tank for monitoring locally and at the pump station control system
- High fuel level alarm
- Fuel pipe leak detection alarm
- Fuel pump
- Fuel pump control panel
- Unit shipped as a finished assembly
- Primary and secondary containment

A day tank shall be provided for the generator. Generator day tank shall be provided with the following:

- Diesel fuel tank with double wall containment

- Leak detection alarm
- Diesel transfer pumps
- Diesel tank return pump
- Filters
- Level switches (LSHH, LSH, LSL, LSLL)
- Control panel

Approximate fuel tank dimensions are 135” x 96” x 66”H. Storage tank capacity varies between each pump station site depending on the size of the generator. Fuel storage tank and transfer pumps shall be coordinated with the generator manufacturer during final design.

Load Bank

A permanently installed load bank shall be provided for generators. The load bank shall be installed on the duct or the radiator of the generator. The Load bank shall be sized per manufacturer’s recommendations. Load bank will be required for use when only the dry weather (smaller HP pumps) are used. The size difference in wet weather and dry weather pumps will require the load bank to prevent “wet stacking” of the generator.

Load banks shall be utilized to exercise the generator once a month.

A local 240/120v distribution panelboard shall be provided at the generator skid or in the same room as the generator. Distribution panel shall provide local power for battery charger, block heater, lights, receptacles, etc.

J.5.5 Uninterruptable Power Supply (UPS)

Provide an industrial rated uninterruptable power supply (with maintenance bypass switch to allow transfer to utility power in the event of a UPS fail) for all pump station SCADA panels. UPS runtime shall be a minimum of 20 minutes, refer to the Automation Standards.

J.6 SITE DESIGN GUIDELINES

J.6.1 Underground Conduits and Ductbanks

All equipment and instrumentation located below grade fed by conduits from above grade shall have conduit drain boxes. Conduit interiors shall be plugged with sealant to keep water from traveling down conduits into equipment or instrumentation. Drain boxes will not be located over or on top of electrical panels.

Underground conduits outside of structures, excluding utility conduits, shall have a minimum cover of 24 inches. Utility power and telephone conduits shall have a minimum cover of 36 inches or as required by the utility company.

Signal conduits shall be separated from power and control conduits by a minimum of 12 inches.

Detectable warning tape shall be buried approximately 12 inches above all underground ductbanks and other conduits runs over 10 feet in length. Detectable warning tape shall be aligned parallel to and within 3 inches of the centerline of the conduit or ductbank. Use red tape for “Electric” service and orange tape for “Communication” service.

Labels shall be provided for all pullboxes and at end of parallel runs and tees.

A minimum of 20 percent spare conduits shall be provided in main ductbanks, minimum size 1”.

All ductbanks that are installed under regularly used roadway or motor vehicle pathways, shall be concrete reinforced to protect the conduits.

J.6.2 Grounding System

The grounding system shall consist of a perimeter ground grid, #4/0 bare copper wire, with ground test wells for each new structure of the pump station with interconnections between each ground electrode and also the existing grounding system.

The ground grid shall have copper-clad ground rods driven to a depth of 10 feet.

Building steel, pumping equipment, all electrical equipment and enclosures, and exposed metal that might become a current carrying conductor shall be connected to the ground grid to limit touch potential.

An equipment grounding conductor sized per applicable codes shall be run in all raceways.

Ground connections that are buried or embedded shall be made by the compression method.

J.6.3 Equipment Layout

The following shall be required for equipment layout:

- Provide the minimum clear working space in front of electrical equipment as required by the NEC.
- Rooms shall be climate controlled for efficient cooling and heating for the new equipment and to maintain ambient temperature rating of equipment.
- Provide housekeeping pads for all pad mounted equipment. Housekeeping pads shall be 3-1/2 inches above surrounding finished floor or grade unless otherwise shown and shall be 4 inches larger in width on all sides of equipment. Concrete shall be precisely leveled so that equipment set in place will not require shimming.
- Maximize use of concealed conduits where possible. However, conduits embedded in concrete slabs shall not exceed the limit at which the concrete slab integrity becomes compromised. The Designer will coordinate with structural design regarding location of concrete embedded conduits.
- Utility metering and enclosure shall be mounted remotely on the exterior wall of the building.

J.7 ELECTRICAL EQUIPMENT

J.7.1 Switchboards

The following shall be required for switchboards:

1. Confirm to IEEE, ICEA, NEC, ANSI, UL and NEMA standards.
2. Low voltage power circuit breakers shall comply with the following specific standards:
   - ANSI Std. C37.16 – Preferred Ratings
   - ANSI Std. C37.17 – Trip Devices for LVPCB
   - ANSI Std. C37.50 – Test Procedures
   - IEEE Std. C37.13 – LVPCB Used in Enclosures
   - UL 1066 - LVPCB

3. Heavy gauge steel with NEMA 1 rating for indoor location.
4. Busses shall be tin plated copper.
5. Power bus shall have continuous amperage rating at least equal to the main circuit or the power source and shall be braced to withstand stresses resulting from the maximum short circuit current available. Minimum bracing shall be 65,000 amperes symmetrical unless deemed too low by results of the available fault current from the serving utility company.
6. Ground bus shall be rated per NEC relative to the power bus amperage rating.
7. Main circuit breakers shall be 100 percent rated and indicating type with adjustable ground fault (G), Long (L), Short (S), and Instantaneous (I) trip functions. Specify digital trip units on all circuit breakers with L/S, L/S/I, or L/S/I/G trip functions.
8. 8. Main circuit breakers and feeder breakers shall be low voltage power circuit breaker type. Breakers shall be selected with adjustable trip functions for select coordination.

J.7.2 Automatic Transfer Switch (ATS)

The following shall be required for ATS:

1. The ATS will be of the open transition type using power circuit breakers for transferring power between the generator and utility power. A solid state controller will be specified with the ATS for the automatic transfer scheme.
2. ATS shall conform to IEEE, ICEA, NEC, ANSI, UL 1008 and NEMA standards.
3. Heavy gauge steel with NEMA 1 rating for indoor location.
4. ATS shall be positively interlocked mechanically and electronically to ensure only one of two possible positions, normal or standby power.
5. A position indicator shall be visible from the front of the switch to show to which source the load is connected to.
6. Breakers shall be rated for continuous duty, repetitive switching of all types of loads or transfer between two active power sources and be 100 percent rated.
7. Ground bus shall be rated per NEC relative to the power bus amperage rating. All busses shall be tin plated copper.
8. Circuit breakers shall be indicating type with ground fault (G), Long (L), Short (S) and Instantaneous (I) adjustable trip functions.
9. Provide microprocessor based ATS control panel with programmable generator exercise time.
10. Provide Auto/Test switch to test operation of the ATS by simulation a loss of the Normal Power Source.
11. At a minimum, the ATS shall include the following dry contacts:
    - Switch Closure to Utility
    - Switch Closure to Alternate Source
    - Pre-Transfer Delay
    - Engine Start

J.7.3 Motor Control Centers

The following shall be required for motor control centers:

1. Motor control centers shall conform to the standards for NEMA Class II, Type B diagrams and wiring.
2. UL 845, 600v, 65,000 amperes interrupting current (AIC) minimum unless deemed too low by results of a power systems study and available fault current from serving utility company.
3. Circuit breaker operator extensions or similar for a breakers over 70 inches in height.
4. MCC shall be designed to minimize fault propagation between and in front of MCC sections.
5. MCC shall have removable draw-out buckets for all cubicles labeled “SPACE”.
6. MCCs shall be located indoors, in climate controlled rooms or buildings.
7. MCCs shall be manufactured by Eaton, Freedom 2100 to standardize on one manufacturer as required by SVCW.

J.7.4 Variable Frequency Drives (VFDs)

The following shall be required for VFDs:

1. The VFD shall be of the latest technology used to control and maintain a process variable (level, flow, pressure, speed, etc.) by varying the motor speed.
2. VFD shall constantly monitor the load current with an electronic thermal overload relay and trip the drive on motor overload. The electronic overload relay shall be adjustable and compensate for the reduced cooling of the motor at reduced speeds.
3. For each programmed warning and fault protection function, the drive shall display a message in complete English words or Standard English abbreviations. The three (3) most recent fault messages along with time, current, speed, voltage, frequency and digital input status shall be stored in the drives fault history. The last ten (10) fault names shall be stored in the drive memory.
4. Transient and surge voltage power line input and out protection shall be provided for each VFD through use of metal oxide varistors (MOVs), phase-to-ground filter capacitors, or other approved equal methods.
5. Provide 18 pulse VFDs for all motors 50 HP and greater.
6. VFDs shall be located indoors, in climate controlled rooms.
7. VFDs shall be located in electrical rooms or enclosures that include environmental controls to maintain internal temperature not greater than 40 Degrees Celsius.
8. VFDs shall be configured to be re-enabled automatically after a power fail (no manual reset required) for automatic operation by the pump station control system.
9. Provide 120v control panel interface which provides power to VFD input and output control circuits as well as external devices, such as pilot lights, meters, relays, and other miscellaneous equipment.
10. Provide VFDs with a door mounted alpha-numeric human interface module (HIM) digital display with keypad to view and adjust the setpoints, parameters, diagnostic, and status indicators.
11. All VFDs shall be provided with Ethernet communications for non-essential data.

12. Provide VFDs with the following protection:
    - Inrush current limit
    - Ground fault
    - Over-temperature heat sink thermal switch to protect against excessive ambient temperature or loss of cooling
    - DC bus protection
    - Under voltage
    - Over frequency
    - Input or output phase loss
    - Speed compensated electronic motor overload current
13. VFDs shall comply with the latest edition of IEEE 519 for total harmonic voltage, current distortion calculation and measurement.
14. Voltage Harmonics: Operation of the VFD shall not add more than 3 percent total harmonic voltage distortion while operating from the utility source, or more than 5 percent while operating from the standby generator.
15. Current Harmonics: Maximum allowable total harmonic current distortion limits for each VFD shall not exceed 5 percent as calculated and measured at the point of common coupling.
16. Maximum allowable audible noise from the VFD system shall be 85 A-weighted decibels (dBA) at a distance of one (1) meter (3.3 feet) at any speed or load condition.
17. The Point of Common Coupling (PCC) for all harmonic calculations and field measurements for both the voltage and current distortion shall be defined as the closest feed electrical distribution equipment (i.e., MCC, or distribution switchboard where VFDs are fed directly from the switchboard.)
18. Provide VFD with output dv/dt filters when the motor load exceeds the manufacture's recommended distance to avoid long lead voltage distortion at the motor.
19. VFD's shall be Eaton SVX9000 series (50HP and less) and Eaton CPX9000 series (greater than 50 HP), Allen-Bradley/Rockwell PowerFlex 755 series or approved equal.

J.7.5 Electronic Reduced Voltage Solid State (ERVSS) Motor Starters

The following shall be required for ERVSS Motor Starters:

1. For all motors above 50 HP and not using a variable frequency drive, provide ERVSS motor controllers designed with adjustable time interval soft start and soft stop features. The RVSS shall be equipped with "Pump Control" mode for non-linear voltage ramp starting and stopping to smoothly accelerate and decelerate the motor.
2. Specify 120vAC control power interface.
3. The RVSS shall include an integral bypass contactor, NEMA rated.
4. The ERVSS control circuit shall have a built-in motor overcurrent and phase loss/reversal protection.
5. Front panel mounted remote interface module with two line LCD display and keypad to access ERVSS programming.
6. ERVSS motor controllers shall be networked to the pump station control system for operation and monitoring.

7. ERVSS shall be provided with isolation contactors ahead of the ERVSS to isolate against voltage or current spikes while not in operation.

J.7.6 Full Voltage Non-Reversing Motor Starters (FVNR)

The following shall be required for FVNR Motor Starters:

1. Full voltage non-reversing starters shall be provided for all motors below 30 HP not using a variable frequency drive, and be rated for a minimum of 65,000 RMS symmetrical amperes or as deemed necessary from the results of the power system study.
2. Motor starters shall be NEMA size 1 minimum, magnetic line voltage type with individual control power transformers and 120v secondary fuses with blown fuse indicators.
3. All starters and contactors shall be rated and designated in accordance with NEMA standards. Starters designated as IEC ratings or with dual IEC/NEMA ratings shall not be allowed.
4. For stand-alone FVNR motor controllers, overload relays shall utilize bi-metallic heater elements. Trip setting shall be adjustable from 85 percent to 115 percent of rating.

J.7.7 Panelboards

The following shall be required for panelboards:

1. Panelboards shall comply with the applicable sections of UL, NEC and NEMA and be manufactured by the same manufacturer for all panelboards.
2. A removable machine-typed circuit directory with clear plastic cover shall be shipped with each panelboard and mounted on the inside door in a frame. Circuit directory shall be as approved in the Submittal. Circuit directory shall be updated or replaced to show as-built breaker identification. “Sticker” type panelboard schedules are not acceptable.
3. Panelboard shall have bolt-on devices with a hinged door over all circuit breaker handles. A copper ground and neutral bus bar shall be included in panelboards with terminal screws.
4. Provide panelboard breakers with individual padlock hasps (lockable in off position) when feeding a motor.

J.7.8 Electrical Enclosures and Boxes

The following shall be required for electrical enclosures and boxes:

1. Enclosures shall be NEMA rated for installed locations with fast access door latches. Enclosure construction shall be 14 gauge minimum with continuously welded seams. Outer door shall have provisions for locking enclosure with standard padlock. Enclosures shall be per SVCW standards. Enclosure ratings are listed in Table J-2.

Table J-2. Enclosure ratings

Item	NEMA Rating	Material	Closure Type	Notes
Local Control Panels	NEMA 4X	FRP	Latch-bale type closures with hinges per vendor design.	Generally in close proximity to equipment and processes and so exposure to water, gases, sludge, etc. drive the NEMA 4X
PLC & RIO Panels	NEMA 12	Painted Steel	Full piano hinge and three point lockable door latch.	Protection from gasses, dust, water drip & dust.
Fiber Termination Panels	NEMA 12	Painted Steel	Free standing with full piano hinge and three point lockable door latch.	Protection from gasses, dust, water drip & dust.
Junction Boxes	Per design engineer with possible review by SVCW as warranted	Per design engineer with possible review by SVCW as warranted	Per design engineer with possible review by SVCW as warranted	
Pull Boxes	Per design engineer with possible review by SVCW as warranted	Per design engineer with possible review by SVCW as warranted	Per design engineer with possible review by SVCW as warranted	
VFD enclosures	NEMA 4X	FRP	Latch-bale type closures with hinges per vendor design.	Given the proximity to equipment and processes this drive potential exposure to water, gases, sludge, etc. drive the NEMA 4X
MCCs Use current Eaton MCC specification.	NEMA 12	Painted Steel	Per vendor design.	
LOS Boxes	NEMA 4X	316 SS	Lift off/screw on covers.	At the Equipment. Wall mounted or pedestal mounted.

Notes:

1.NEMA 4X panels/boxes become 3R when penetrated, but 4X is the starting basis for the panels and boxes specified to be purchased/provided by the contractor.

2. If local hazards drive a higher level of protection such as NEMA 7, the higher level of protection will be used in lieu of the designation above.

3. Panels located outside expose to sun shall be 316 stainless steel. FRP shall not be installed where subject to direct sun exposure.

2. Provide full height white back pan, thermoplastic data pocket mounted on inside door and 10 tap (min) copper ground bus.
3. Provide enclosures with accessories consisting of breaker to disconnect incoming power, pad lockable disconnect for breakers used in circuits above 120v, dead front door, heater, fan, removable metal filters, louvers and thermostats. Enclosure shall be provided with engraved phenolic nameplate.
4. Terminal boxes located at wet well area for connecting vendor pump cables to field wiring will be constructed to provide required isolation of conduit system from the hazardous area defined in the NEC Article 500 and 501. The terminal box shall be sized per NEC, 36” x 36” x 12”D minimum. The terminal box will provide hard mounted lugs for the motor conductors larger than #10 AWG as well as din rail mounted terminal blocks for the motor temperature and moisture (leak) sensors conductors. Din rail mounted terminal blocks shall be coordinated with the pump control conductors and rated 600v minimum. Power terminal blocks shall be coordinated with

the pump cables and rated 600v. The design of the enclosure and conduit penetrations shall allow for pump cable entry without requiring conduit seals on these cables. The enclosure shall be rated as non-corrosive and weatherproof, NEMA 4X 316 Stainless Steel. Terminal box shall be installed a minimum of 18" above finished grade. Provide copper ground bar 2" x 12" x ¼" with lugs to suit conductors. Provide cable supports and cable connectors. Refer to the Drawings for Standard Detail of this piece of equipment.

J.7.9 Dry-Type Transformers

The following shall be required for dry-type transformers:

1. Primary winding rating 600v and less used for power distribution.
2. Maximum size will be 30 kVA, three-phase, 80-degree C rise with 220-degree C insulation.
3. Ratings and Standards
   - 10kVA and smaller shall be single phase or as indicated
   - 15kVA and greater shall be 3 phase or as indicated
   - Voltage, frequency, number of phases and kVA as indicated.
   - Conform to ANSI/IEEE c57.12.01 and ANSI/UL 506.
4. Enclosures
   - 15kVA and smaller – weatherproof, nonventilated enclosures
   - Indoor over 15kVA – drip proof, ventilated enclosures
   - Outdoor – weatherproof enclosures.
5. Transformers 25kVA and below shall be suitable for wall mounting and include mounting brackets and hardware. Transformers over 25kVA shall be floor mounting type. Transformers shown inside the MCC shall be mounted in the MCC compartment sized for the size of transformer required.
6. Bond transformer enclosures and neutrals together and connect to the ground grid.
7. Adjust tap settings to provide proper voltage at panelboards.
8. Ground transformer in conformance with the NEC.

J.7.10 Lockout Stop Pushbutton Control Stations (LOS)

The control station shall consist of a NEMA 4X, 316 stainless steel enclosure, a 2-position Push-Pull button and a padlock attachment. The lockout stop pushbutton control station shall be as manufactured by Eaton Cat #10250TN33 enclosure, #10250T5B62 pushbutton with a #10250Ta64 padlock attachment or equal. Provide auxiliary contacts on the pushbuttons for LOS status to SCADA. No equal to match SVCW standards.

J.7.11 Wiring Devices

The following shall be required for wiring devices:

1. Three phase receptacles shall be suitable for 480 volt, 3-phase, 4-wire service, with ampere ratings as specified. Receptacles and plugs shall be designed so that the grounding pole is permanently connected to the housing. The grounding pole shall make contact before the line poles are engaged when the plug is connected to the receptacle housing. The plug sleeve shall also make contact with the receptacle housing before the line and load poles make contact. Receptacles shall be provided complete with cast back box, angle adapter, gaskets, and a gasketed screw-type, weathertight cap with chain fastener. Each receptacle shall be provided with one plug.

2. Receptacles for use in hazardous areas shall be rated in accordance with NEC for the area in which they are to be located and shall be factory sealed. Receptacles shall be designed so the plug must be inserted and turned before load is energized. Receptacles shall be provided with mounting box, sealing chamber, and compatible plug. Voltage and current ratings shall be as 120 Vac, 20-ampere.

J.8 600V CONDUCTORS

J.8.1 Low Voltage Conductors

The following shall be required for low voltage conductors:

1. Conductors shall be copper with 600V minimum rated insulation.
2. Conductors shall be Class C stranded.
3. Surface mark with manufacturers name or trademark, conductor size, insulation type and UL label.
4. Insulation type XHHW-2, rated 90 degrees Celsius in dry and wet locations, oil resistant for all power and control conductors.
5. Insulation type THHN/THWN, 19 strand, rated 90 degrees Celsius in dry locations and 75 degrees Celsius in wet locations, oil resistant for lighting and receptacles only. Seven strand is not acceptable.
6. Minimum #12 AWG for wires used in power transmission circuits or as defined on the Drawings.
7. Minimum #14 AWG for wires used in signal transmission circuits or as defined on the Drawings.
8. All conductors shall be routed in conduits per NEC conduit fill requirements.
9. Splices will be made with water-tight kits as manufactured by 3M or Raychem.
10. Motor terminations will be made with motor disconnect/boot kits.
11. Provide 1000V, VFD rated conductors for all connections from VFD to motors.

J.8.2 Equipment Internal Wiring

The following shall be required for equipment internal wiring:

1. Conductors shall be copper with 600v rated insulation – Type MTW, NFPA standard 79.
2. Minimum #16 AWG for wires used for individual conductor circuits 100v and above.
3. Minimum #18 AWG for wires used for individual conductor circuits below 100v.

J.8.3 Instrument Wiring

The following shall be required for instrument wiring:

1. Conform to UL 2250, UL 1581 and NFPA 70 Type ITC.
2. Field instrument cables shall be 600v insulation 100 percent individual and overall foil shield coverage, twisted pair #16 AWG conductors with drain wire.
3. Non-field instrument cables shall have 300v rated insulation and individual foil shielded twisted pair #18 AWG conductors with drain wire.

J.8.4 Data Cable

The following shall be required for data cable:

1. Data network cable (indoor) shall consist of 4 pair unshielded twisted pair #24 AWG solid conductors. The cable shall be rated by IEEE for service intended – plenum and dry.
2. Data network cable (outdoor) shall consist of 4 pair shielded twisted pair #24 AWG solid conductors. The cable shall be rated by IEEE for service intended – plenum, conduit, wet or dry.

J.9 CONDUIT

J.9.1 General

Conduit types shall be designed per area designations and use according to the following criteria:

- Data conduits shall be RAC-PVC, the entire length of the run
- Dry areas: Rigid Aluminum Conduit (RAC)
- Wet areas: Rigid Aluminum Conduit, Polyvinyl coated (RAS-PVC)
- Corrosive areas: Rigid Aluminum Conduit, Polyvinyl coated (RAS-PVC) or PVC -80
- Class I hazardous area: Rigid Aluminum Conduit (RAC) and Rigid Aluminum Conduit, Polyvinyl coated (RAS-PVC) when required in other designated areas.
- Stud framed walls in insulated and temperature controlled buildings: Electrical Metallic Tubing (EMT)
- Concrete block or brick walls: Polyvinyl chloride (PVC-40)
- Direct buried conduits and ductbanks: Polyvinyl chloride (PVC-80)
- Beneath floor slab-on grade: Polyvinyl chloride (PVC-40)

Twenty percent spare conduits of all types (1 inch diameter minimum) shall be provided in ductbanks between MCCs, switchboards, Electrical rooms, PLC cabinets, major process area pullboxes, handholes and manholes.

J.9.2 Conduit Requirements

The following shall be required conduits:

1. Rigid Aluminum Conduit, couplings, bends and nipples shall be in accordance with NECA 102.
2. Flexible conduit shall only be installed in exposed or accessible locations and shall be less than 36 inches (1/2 inch minimum trade size). Flex connectors shall be PVC coated when connected to RAC-PVC conduits or when located in a NEMA 4X area. Conduit between vibrating equipment and outlet boxes or conduits shall be liquid tight flexible electrical conduit.

J.9.3 Conduit Installation

The following shall be required for conduit installation:

1. Conduit transition (from below to above grade, through walls, through concrete, etc.) shall be RAC-PVC. The transition shall be made below grade at the final sweep RAC-PVC elbow or 1-foot minimum before the transition for exposed conduit. RAC-PVC conduit shall extend one (1) foot minimum beyond transition. Conduit transition has conformed to NFPA 70 requirements in classified areas.
2. The entire electrical raceway system shall be bonded and form a continuous metallic electrical conductor from service point to every box and shall be terminated with ground bushings

connected to the ground bus. Conduits entering enclosures shall be fitted with insulating grounding bushings. All grounding bushings shall be tied to the grounding system with properly sized bonding conductors per the NEC.

3. Conduits connected to boxes, cabinets, etc., outdoors, exposed to weather or in areas subject to excessive moisture shall be fitted with water tight sealing hubs.
4. Raceways for lighting, HVAC and receptacles can be surface mounted.
5. Support rigid conduits at 10 feet intervals and PVC conduits at 5 feet intervals. Support all conduits within 1 foot of boxes or changes in direction. Use riser supports with clamps for vertical conduit risers. For multiple conduit runs, group conduits together and support from the ceiling by means of trapeze hangers. Conduits installed outdoor or in NEMA 4X rated areas above grade shall be braced in place with stainless steel Unistrut stanchions and PVC coated clamps with backplates. Conduit supports with only a single hole are not acceptable.
6. Spare conduits for future use shall be mandrelled, have a pull cord installed and shall be labeled and capped with a coupling and/or plug. Provide a waterproof label on each end of pull cords in spare conduits to indicate the location of the other end.
7. Contactor to remove and recycle or waste all conduit and wire associated with removal or demolition of any equipment.
8. Conduits shall not penetrate any water bearing walls or slabs subject to flooding.
9. When a raceway passes between nonclassified and classified areas, or between noncorrosive and corrosive areas, seals will be installed.

J.9.4 Underground Boxes

1. All underground boxes located in paved areas or other areas which vehicles may travel shall be full H-20 loading rated and have traffic rated metal covers. Boxes over 2 x 3 feet shall be double leaf assemblies with end hinged, torsion spring opening assist-type covers.
2. Concrete perimeter skirts shall be poured around underground boxes in paved areas. Skirt shall extend minimum six (6) inches horizontally and twelve (12) inches vertically around the box.
3. Extension sections shall be specified to reach the depth of underground conduits with a maximum depth of forty eight (48) inches.
4. Provide eighteen (18) inches (minimum) of ¾ inch crushed rock under the lowest section of pullbox, extending eight (8) inches outside pullbox perimeter.
5. Install #4/0 bare copper ground through pullbox, in conduit ductbank. Screw-type copper ground bus shall be provided in each box.
6. Ground cover frame, cover and other exposed metal parts to bare copper ground cable.
7. Provide 10-foot long, ¾ inch diameter ground rods inside all vaults.
8. Covers shall be engraved or bead welded (minimum thickness ¼ inch) “ELECTRICAL” or “CONTROL” as applicable with specific pullbox numbers.
9. Limit the number of directional changes of the conduit to total no more than the equivalent of 270 degrees in any run between pull points. Install pullboxes for ease of pulling and as necessary to meet code. Conduit runs between two vaults, pull or junction boxes shall be limited to a maximum of 300 feet, or less 50 feet for every 90 degrees of conduit change in direction. A maximum of three equivalent 90 degree elbows are allowed in any continuous runs.

J.10 IDENTIFICATION

J.10.1 Equipment

The following shall be required for equipment identification:

1. All equipment numbering shall be as shown on the P&IDs
2. Each major piece of electrical equipment shall have a manufacturer's nameplate showing the name, model designation, part and model number, serial number and pertinent ratings such as voltage, amperage, # of phases, range, calibration etc.
3. All equipment shall have rigid laminated black phenolic plastic nameplates with beveled edges and white lettering. Provide engraved aluminum nameplates secured with stainless steel screws for outdoor equipment. No letters shall be smaller than 3/16 inch.

J.10.2 Conductors

The following shall be required for conductor identification:

1. All wires, field and interior to equipment, shall be identified with wire labels on both ends of each wire.
2. Wire labels shall be machine printed on with white heat shrinkable tubing.
3. Labels shall be shrunk to loose fit on wires.
4. Wire labels for lighting and receptacle circuits shall consist of the panel board and circuit number and a unique node number.
5. Wire color codes shall be as shown below:

   A. CONTROL CONDUCTORS:

   Single-conductor control conductors shall have the following colors for the indicated voltage listed in Table J-3:

Table J-3. Single-conductor Control Conductors Color Coding

Control Conductor	120V
Power (AC)	Black
Control (AC)	Red
Neutral	White
Ground	Green
Foreign Voltage (DC)	Blue/White
Foreign Voltage (AC) Non-powered contact interface	Yellow
Power (DC)	Blue
Control (DC)	Violet

   B. POWER CONDUCTORS:

   Power conductors shall have the following colors for the indicated voltage listed in Table J-4:

Table J-4. Power Conductor Color Coding		
Power Conductor	480V	240/120V
Phase A	Brown	Black
Phase B	Orange	Red
Phase C	Yellow	Blue
Ground	Green	Green
Neutral	Gray	White

Cables may be black with colored 3/4-inch vinyl plastic tape applied at each cable termination. Tape shall be wrapped with 25 percent overlay to provide 3 inches minimum coverage.

J.10.3 Conduits

The following shall be required for conduit identification:

1. Conduits shall be identified on the drawings.
2. Conduit shall conduit tags at both ends of each conduit run and where it enters and leaves an open transition point, junction boxes, terminal boxes, pullboxes, vaults, and manholes, etc.
3. All conduits shall have unique conduit names, including spare conduits. Conduit prefixes are as follows:

   C – Control wires

   D – Data / Communications

   H – Medium voltage (voltage > 1000v)

   P – Power wires (480v – 120V)

   S – Signal wires (low voltage analog)

   X – Spare
4. Tag material shall be aluminum with machine stamped lettering. The size of the tag shall be ½ inch high. No letters are allowed smaller than ¼ inch. The tag shall be attached to the conduit with 316 stainless steel wire of the type normally used for this purpose. Stainless steel wire must be crimp connected. Twisting ends together is not acceptable.

J.11 LIGHTING REQUIREMENTS

The following shall be required for lighting:

1. Area lighting for each site shall be from LED pole mounted lamps with utility 120v weatherproof GFI receptacles in each pole.
2. Lighting products shall minimize up-light and illuminate only the subject area.
3. All indoor areas shall be provided with switchable circuits with a minimum number of non-switched lighting fixtures for personal safety.
4. Motion activated primary lighting may be provided in infrequently visited areas such as bathrooms and storage areas to the extent that is suitable for the environmental and safety conditions of the area.
5. Battery pack type emergency lighting shall be provided for personnel safety.

6. Illumination levels will be established in compliance with California Title 24 energy levels, with illumination level goals as follows:

AREA	MAINTAINED FOOT CANDLES (FC)
a. Electrical equipment rooms	40 FC
b. Mechanical equipment rooms	30 FC
c. Outdoor areas	Compatible with existing systems. (Generally 1-2 FC)

7. Lighting circuits will be 120 volts or 277 volts as economically determined for each area except outdoor lighting system will be 120 or 240v.
8. All new lighting fixtures shall be suitable for use with LED lamps. Per SVCW standard on lights, provide BAYLED78W for all indoor lights. Refer to http://www.rabweb.com/specSheet.php?product=BAYLED78W, no equal.
9. Lighting panelboards shall be 120/40 VAC.

The following shall be required for receptacles:

1. Convenience (120v) receptacles will be provided in all new areas of the pump station.
2. Receptacles will be powered from different circuits than the lighting fixtures. Where convenient, these circuits may occupy the same raceways.
3. Receptacles located outdoors shall include ground fault interrupters and weather proof wet-in-use covers.
4. Receptacles shall use pressure lugs to accommodate 19 strand THHN or other suitable conductors.

J.12 Motor Sizing

Motor sizing will be based on hydraulic and capacity requirements for the pumps.

J.13 Utility Company (PG&E) Requirements

Based on the increased load requirements and new service equipment locations at the pump stations it is assumed that the existing utility service will have to be replaced. Replacement of the existing utility service would include the following:

- Pad mounted utility transformer
- Primary and secondary service conductors and conduit
- Utility meter and enclosure
- Primary conduit risers (at overhead poles)

Each pump station appears to have overhead poles located within 100FT of the existing utility transformers. It is assumed that the new primary service conductors will be connected to the existing overhead lines and poles near the pump station.

Final design shall include the onset of coordination and filing out the appropriate service application forms with the utility company to establish a new service and remove the existing service at the pump stations.

Design shall include transformer equipment pads, primary and secondary conduits, grounding, risers and meter enclosures per the utility company standards.

J.14 Standard Details

Standard details are included in Attachment N.

This page intentionally left blank.

K. ATTACHMENT

Instrumentation and Control

K.1 Purpose

The purpose of this document is to guide the pump station final design teams and to ensure consistent quality and similar facilities for ease of operation and maintenance. This document is meant to be a working document for the design teams such that during the design, changes can be made based on design team review and consensus.

K.2 Codes and Standards

1. Instrumentation and control design shall comply with the National Electrical Code, the California Electrical Code, the Occupational Safety and Health Act, and the requirements of local codes in effect at the project site. All electrical construction shall be performed in the accordance with the most current version of the following codes and standards:
   - American National Standards Institute (ANSI) standards.
   - Insulated Cable Engineers Association (ICEA) standards.
   - Institute of Electrical and Electron Engineers Association (IEEE) standards.
   - Instrument Society of America (ISA) standards.
   - California Electrical Code (CEC), 2013, based on the 2011 National Electrical Code (NEC)
   - National Fire Protection Agency (NFPA 70E) Standard for Electrical Safety in the Workplace.
   - Fire Protection in Wastewater Treatment and Collection Facilities (NFPA 820).
   - National Electrical Manufacturers Association (NEMA) standards.
   - Occupational Safety and Health Administration (OSHA) standards.
   - Acceptance Testing Specifications of Electrical Power Distribution Equipment and Systems, International Electrical Testing Association (NETA).
   - Underwriters Laboratories, Inc.
2. In instances where two or more codes are at variance, the most restrictive requirements shall apply. Codes and standards referenced shall be considered minimum acceptable work.
3. Nothing in the Procurement Documents shall be construed to permit work or materials not conforming to the preceding codes and standards.
4. All work shall also be performed in accordance with SVCW, State, County or Owner standards and local Utility codes.

K.3 Control Design Guidelines

The following information is a guideline for the final design of the pump station control system and may duplicate or be in addition to SVCW most recent version of their Automation Standards. The designer shall use this Standard as the basis for the final design of the control system at the pump station.

The existing pump stations' control systems shall be replaced in their entirety with new equipment to match SVCW's Automation Standards.

The new process equipment shown on the P&IDs shall be connected to the pump station control system. Exact I/O count for the new process equipment and instrumentation shall be determined during final design.

The existing SCADA HMI workstation at the SVCW main Waste Water Treatment Plant (WWTP) shall be configured to integrate the new process equipment at the pump stations. Graphic screen layout and reporting shall match the requirements of the Automation Standards. Each pump station shall be provided with redundant communication hardware for increased reliability for communications to the WWTP located in Redwood Shores.

The pump stations shall be remotely monitored and controlled from the SCADA HMI work station at the WWTP. Local monitoring and controls shall be available to operators via laptop connection to the pump station network or a desk top unit located in the Electrical Room.

The pump stations are considered critical process areas, therefore new SCADA hardware type and/or model shall adhere to the Automation Standards as stated herein.

Pump station control system architecture shall include redundant Allen-Bradley/Rockwell Automation ControlLogix PACs in redundant configuration consisting of (1) 1756-A7, (1) PA-75, (1) 1756-EN2T, (1) 1656-EN2TR, (1) 1756-RM, (3) 1756-N2 and (1) 1756-L73 Control Logix PAC for each chassis. Additionally, RIO cabinets will be located near the Wet Well areas to consolidate field data and send via Ethernet over fiber optic medium to the main control panel located in the Electrical Room. Refer to Figure K-1 for diagram of proposed pump station control system.

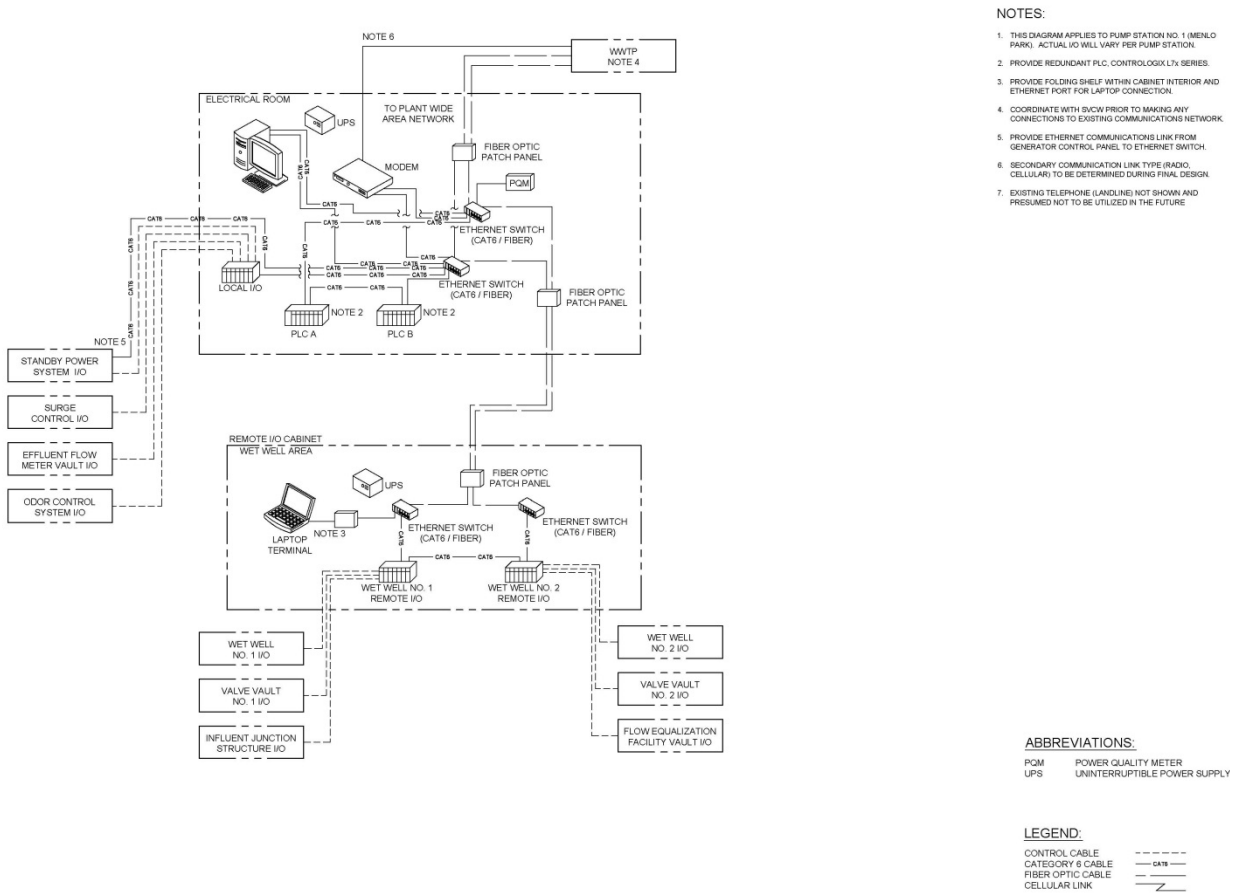

Figure K-1. Proposed Pump Station Control System Diagram

PLCs and all critical instrumentation shall be connected to an uninterruptable power supply located in the new control panel.

The control system shall be designed to use a high level of automation consistent with safety, maintenance and operational requirements. As a rule, the control system shall control sequences of control actions, which are either event-driven or time-driven during normal operation, as well as all control that would require frequent operator action to start/stop equipment or change valve positions. The control system shall separately monitor individual interlocks, alarms and status.

All personnel or equipment safety interlocks (including Lock-Out-Stop [LOS] or Emergency Stop pushbuttons) shall be hardwired and failsafe. The safety interlocks shall function in any mode of operation. Software interlocks can be performed through the PLC.

The control system shall monitor all analog instruments, final control elements, alarms, and interlocks for equipment and process-related operations.

Redundancy shall be provided for some critical instrumentation i.e., dual ultrasonic level transducers located in the wet well. Additional requirements for redundant instruments are included in the Automation Standards.

Manufacturer-supplied packaged units may be provided and integrated with the pump station control system. The designer shall evaluate the requirements for interfacing packaged equipment to the pump station control system including implementation of PLCs and the SCADA HMI monitoring and

control requirements. If the manufacturer provides an embedded PLC, it should be specified as one of the standard models used by SVCW.

K.4 Control System Hierarchy

Refer to Section 2.0 Control System Hierarchy in the Automation Standards for equipment control modes and operational status.

K.5 Device Colors

Pushbutton actuators and action-initiating icons of color graphic interface devices, indicating lights, and icons of color graphic interface devices shall be color-coded in accordance with the following table:

Table K-1. Device Colors

Color	Pilot Device	Typical Function	Examples
Red	Pushbutton	Emergency Stop, Stop, Off	Emergency Stop, Master Stop, local Stop at equipment
	Pilot Light	Stopped, Danger, Fault Condition, Alarm Closed	Equipment off or stopped. Machine ready for operation with all conditions normal or cycle complete and machine ready to be restarted. Valve or gate is closed and process is not flowing.
Yellow (Amber)	Pilot Light	Attention, caution/marginal conditions. Change or impeding change of conditions	Alarm condition, indication that a protective device has stopped the machine i.e., overload Some value (pressure, temperature) is approaching its permissible limit. Ground fault indication. Overload that is permitted for a limited time.
	Illuminated Pushbutton	Attention or caution/Start of an operation intended to avoid dangerous conditions	Reset of alarm conditions after conditions have been rectified and authorization by light.
Green	Pilot Light	Equipment running or in motion. Open	Automatic cycle or motors running Valve or gate is open and process is flowing.
	Illuminated Pushbutton	Machine or unit ready for operation/Start or On.	Start or On after authorization by light; start of one or more motors for auxiliary functions; start or energization of machine elements.
White (Clear)	Pilot Light	Normal condition confirmation	Power on; Normal pressure, temperature.
	Illuminated Pushbutton	Confirmation that a circuit has been energized or function or movement of the machine has been started/Start-On, or any pre-selection of a function.	Reset of power or normal conditions after authorization by light.

K.6 PLC Hardware and Software Standards

The following guidelines apply to new PLC/SCADA hardware and software.

K.6.1 Programmable Logic Controller (PLC)

1. Allen-Bradley ControlLogix L7x series shall be used for critical process areas. Provide redundant 100 Mbps Ethernet connectivity to the pump station control system network.
2. ControlLogix processors shall be provided with redundant monitored hot standby equipment. Each PLC system shall have dual process or chassis, dual processors, dual communications modules and dual redundancy modules. Each chassis shall be equipped with a dedicated power supply.

K.6.2 Software

1. Currently the WWTP is utilizing Wonderware 2012 R2 System Platform for their HMI and SCADA interface for monitoring the WWTP and existing pump station operations. This Shall be used for all pump stations.
2. The pump stations shall include software that allows localized HMI control via a workstation or laptop connected to the pump station network and PLC.
3. Wonderware Historian (for data storage) shall be used for recording historic data for process variables, power data, drive data, and equipment status tracking.
4. Programming software for the PLC's shall be Rockwell Softaware Studio 5000 for ControlLogix processors with the version coordinated with the WWTP version currently in use for compatibility.
5. PLC and SCADA software programming requirements are included in the Automation Standards.

K.6.3 Work Station (HMI) Hardware

1. The pump station shall include a desk top SCADA HMI work station located in the electrical room or where space permits in the pump station building. The workstation shall be connected to UPS power. Refer to the Automation Standards for hardware requirements.
2. A network connection for a laptop shall be provided at the RIO cabinet located at the wet well area for local monitoring and control of the pump station in addition to the desktop workstation located in the pump station building.
3. Pump Station control panels shall have data and power port assemblies mounted on the panel to provide 120 VAC and Ethernet access The mounting loaction on the panel is to be approved during panel design for each panel. Assemblies shall be by GracePort.

K.6.4 Remote Communications

1. Dual communication links shall be provided from the pump station to the WWTP. Primary communication link shall be over fiber optic lines. Secondary communication link shall be over a T-1, radio link or cellular systems and will be determined and coordinated with SVCW during final design. A radio study for the remote pump stations was completed by SVCW in 2013.
2. Currently the pump station uses T-1 service for communicating to the WWTP. The use of these lines will eventually be removed as SVCW updates their remote communication systems to provide increased data transfer speeds and reliability. New fiber optic cables and conduits are being installed as part of the pipeline projects and is assumed to be available when the pump stations are in construction.

K.6.5 Device Level Ring (DLR) for RIO Communications

1. All new redundant PLC's shall communicate to Remote Input/output RIO chassis via Device Level Rings. DLR's shall be use to communicate with Ethernet/IP enabled devices such as VFD's, Power Monitors, etc. Where possible when Ethernet Communication is used the designer shall attempt to specify equipment that uses the DLRs and Ethernet/IP.

K.6.6 Input & Output Circuits

1. Discrete input circuits shall be 24 VDC. 120 VAC discrete circuits shall not be implemented.
2. Discrete outputs shall be 24 VDC.
3. Analog input signals shall be scaled between 4 and 20 mA DC.
4. Input/output modules shall be as specified in section 3.2.3.6 of the Automation Standard.

K.6.7 RIO

1. RIO design shall utilize Allen-Bradley I/O module systems that are compatible with the ControlLogix L7x series . Provide dual chassis for the Wet Well RIO cabinet as shown on Figure K-1. Each chassis shall be equipped with a dedicated power supply.
2. Field connections shall only require single connections to the termination assembly.
3. The RIO chassis shall communicate to the PLC via a dual fiber optic communication system as shown on the control system diagram per the Automation Standards.
4. Provide uninterruptable power supply.
5. Provide managed switch with capability to connect laptop.
6. Enclosure requirements shall be as specified herin. In addition, provide foldable shelf for use as laptop support.

K.6.8 Panels and Enclosures

In lieu of SVCW's Automation Standards section 4.5, panel and enclosure requirements shall be as follows.

Table K-2. Panel and Enclosure Requirements

Item	NEMA Rating	Material	Closure Type	Notes
Local Control Panels	NEMA 4X	FRP	Latch-bale type closures with hinges per vendor design.	Generally in close proximity to equipment and processes and so exposure to water, gases, sludge, etc. drive the NEMA 4X
PLC & RIO Panels	NEMA 12	Painted Steel	Full piano hinge and three point lockable door latch.	Protection from gasses, dust, water drip & dust.
Fiber Termination Panels	NEMA 12	Painted Steel	Free standing with full piano hinge and three point lockable door latch.	Protection from gasses, dust, water drip & dust.

Notes:

1. NEMA 4X panels/boxes become 3R when penetrated, but 4X is the starting basis for the panels and boxes specified to be purchased/provided by the contractor.

2. If local hazards drive a higher level of protection such as NEMA 7, the higher level of protection shall be used in lieu of the designation above.

K.6.9 Ethernet Switches

Coordinate with SVCW for current Ethernet switch requirements.

K.6.10 Fiber Optic Patch Panels

Coordinate with SVCW for current fiber optic patch panel requirements.

K.6.11 Fiber Optic Cable

Coordinate with SVCW for current fiber optic cable requirements.

K.6.12Tagging and Name Convention

SCADA tag names shall match that of the latest and most current tagging standards as developed by SVCW. The Designer shall coordinate and obtain the most recent version of the tagging standards from SVCW.

Refer to SVCW's Automation Standards for additional tagging requirements.

K.7 Instrumentation Equipment

Instrument enclosures shall conform to the National Electrical Code (NEC) area classification. All instruments, to the maximum extent possible, shall be manufacturer's standard product offering shall communicate with the SCADA system and shall conform to the applicable standards for their respective process application (e.g., environmental conditions and wetted surfaces). Instrument wiring shall be electrically isolated from the instrument case. All instruments shall be industrial quality (not commercial).

All instrument transmitters shall include an integral indicator provided with the transmitter if mounted in an easily accessible location, and shall be provided with a remote indicator when the transmitter is not mounted in an easily accessible location.

Instruments shall be provided with all manuals (maintenance/programming). After installation, provide a copy or list of any and all parameters that were changed from factory settings.

The following instrument types have not been reviewed with SVCW staff and are strictly preliminary selections that shall be discussed and final selection made during the progress of the project design phase.

K.7.1 Flow Meters

1. Flowmeters shall be magnetic type for force mains and non-contact, top-mounted laser Doppler or Ultrasonic flow meter for gravity lines with integral converter/indicating transmitter.
2. Indicating transmitters shall provide full-scale flow rates of 0 to 15 fps.
3. System error shall not exceed 5 percent of flow rate between velocities of 9 to 15 fps.
4. Programmable controller analog inputs from flow meters shall be current type, 4 to 20ma.
5. Transmitters shall satisfy requirements listed within this specification.

K.7.2 Modulation Valves and Gates (Electric Actuators)

Coordinate with SVCW for current modulation valve and gate (electric actuators) requirements.

K.7.3 Transmitters

1. Two-wire type transmitters shall have operating power derived from signal transmission circuit.
2. Transmitters shall meet specified performance requirements with load variations within the range of 0 to 600 ohms with power supply at nominal 24 volts DC with the default range of 0 to 100 percent corresponding to 4 to 20 ma.
3. Transmitter output shall increase with increasing measurement.
4. Transmitter indicators, whether integral or separate, shall be calibrated in process units, and engraved on the indicator scale plate.
5. Time constant shall be adjustable from 0.5 to 5.0 seconds for transmitters used for flow, level transmitters used for flow measurement, or pressure measurement.
6. Transmitter outputs shall be galvanically isolated via electro-mechanical or optical technology.
7. Two-wire transmitters located in a facility area classified as a hazardous per NFPA and the NEC shall be made safe by means of an intrinsic safety barrier. Intrinsic Safety barriers shall be of the active, isolating, loop powered type.
8. Four-wire transmitters shall be isolated from the process and power or provided with a loop-powered signal current isolator. Signal isolators shall provide galvanic isolation of milliampere transmission signals from transmitters. Isolators shall be housed in a NEMA 250, Type 4/7 conduit body derive operating power from signal input current. Input and output signals shall be 4 to 20 milliamperes, and error shall not exceed 0.1 percent of span. Input resistance shall not exceed 550 ohms with an output load of 250 ohms.
9. Level sensors shall be ultrasonic or radar type.
   - Pump wet well level sensors shall include criteria provided in SVCW's latest "Level Instrumentation Configuration for Pump Station Wet Wells" design document.
10. Pressure transmitters shall have the following features:
    - Pressure transmitter: capacitance or piezoresistive.
    - Range: 100:1.
    - Accuracy: 0.075 percent of calibrated span.
    - Indicator: LCD display.

11. Where available as an option, transmitters shall included HART and/or Ethernet communication protocol. One HART communicator shall be added to spare parts list for each project where HART transmitters are specified.

K.7.4 Analyzers

1. Combustible gas detectors shall detect explosive and hazardous conditions.
2. Combustible gas detection systems shall consists of field mounted sensing elements and monitoring assemblies to detect the lower explosive limit (LEL) of combustible gases or vapors, oxygen levels, and hydrogen sulfide (H2S) levels.
3. Installed orientation of the indicator shall permit the operator to easily read the display from the operating floor.
4. Accuracy shall be linear and repeatability, ± 1 percent.
5. Analog signal output shall be into 600 ohm load maximum.
6. Transmitters shall satisfy requirements listed within this specification.
7. Provide minimum 3, SPST contacts rated 5A at 24 VDC or 240 VAC. In addition, provide fault relay, normally energized, deenergizes on analyzer fault.
8. Process alarms (two each) shall be individually programmable to energize above or below set point.
9. Enclosures shall be suitable for NEC Class 1, Division 1 and 2, hazardous areas.

K.7.5 Process Taps

1. Process connections shall be arranged such that instruments may be readily removed for maintenance without disruption of process units or draining of large tanks or vessels.
2. Diaphragm seals shall be the type with flushing connections, Type 316 stainless steel body and Type 316L diaphragm unless otherwise specified.
3. Annular seals shall be the in-line full stream captive sensing liquid type. Metallic wetted parts shall be Type 316 stainless steel.
4. Final connections between rigid raceway systems and instruments shall be made with jacketed flexible conduit with a maximum length of 2 feet.
5. Pressure gauges shall have the following features:
   - Gauges shall be 4-1/2- inch premium grade, glycerin filled units with bourbon tube element, glycerin filled units with bourdon tube element, 270-degree milled stainless steel movement, phenolic case, and shatterproof glass window.
   - Accuracy shall be 1 percent of span or better.
   - All exposed metal parts shall be stainless steel.
   - Taps shall be in bronze pipe saddles secured to the pipe with double bronze or stainless steel straps and shall be for screw connections of pressure gauges on both intake and discharge pipelines for pumps for portable gauges.

K.7.6 Process Switches

1. Contact outputs used for alarm actuation shall be normally-closed or normally-opened as required by the process condition.
2. Contact outputs used to control equipment shall be normally-opened and shall close to start equipment.

3. Contacts monitored by solid state equipment such as programmable controllers or annunciators shall be hermetically sealed and rate for switching currents from 20 to 100 mA at 24 volts DC.
4. Contacts, monitored by electromagnetic devices such as mechanical relays, shall be rated as NEMA ICS 5, designation B300.
5. Double barriers provided between switch elements and process fluids such that failure of one barrier shall not permit process fluids into electrical enclosures.
6. Switch electrical enclosures rated as NEMA 250, Type 4 minimum.
7. Switch contacts located in Class I, Division 1 areas and monitored by solid-state circuits shall be made safe by intrinsic safety barriers.
8. Switch range shall be selected so that the specified set point is at least 30 percent but not more than 70 percent of the span, between the upper range limit and the lower range limit.

K.8 Tags and Names

Permanent tags shall identify field-mounted instruments, such as control valves, transducers, transmitters, gages, etc. Tags shall identify, as a minimum, the instrument number. Tags shall be located so that they do not create a hazard.

Nameplates shall be furnished for panel-mounted devices and enclosures. Nameplates shall identify, as a minimum, the panel and equipment number or panel-mounted device number.

K.9 Cabling and Interconnection

All panels, consoles, enclosures or control device wiring for connection to external circuits shall be wired to terminal blocks or patch panels to facilitate installation, start-up and maintenance. In addition, the following shall apply:

1. For hardwired instrumentation, wire and cables with tinned copper 16 AWG minimum, 600 volt insulated.
2. Each shield shall be connected to a separate terminal point. Loops drawings for instruments using twisted shielded pair cables shall provide a specific location and termination depiction of the shield to be connected to the instrument level grounding system. Shield connection shall be terminated on one end only within the PLC cabinet or panel.
3. Solenoid valves and other devices not available with terminals for connections, and consequently supplied with pigtails leads, shall have these leads landed on terminals in an adjacent conduit.
4. Conductors shall be properly identified at each end with heat-shrink labels.

K.10 Instrument Tubing and Piping

All pneumatic instrument systems and impulse lines shall be designed for personnel safety and to facilitate calibration, maintenance and/or replacement. This shall be accomplished by the following, as a minimum:

1. All instrument systems shall be specified with adequate support features to ensure proper operation. Support features include strain relief on connections to mitigate the consequences of material fatigue that ultimately leads to an unsafe condition.

2. Tubing connection locations shall be specified so that adequate space is available for conducting leak tests and replacing tubing fittings without disturbing adjacent tubing connections.
3. Instrument connections shall be through root valves, isolation valves, or three-valve Type 316 stainless steel bar-stock type manifolds. Valves shall be Type 316 stainless steel, ball-type.

K.11 Grounding, Shielding and Isolation

1. Grounding. A single point ground shall be established for the instrumentation and control system equipment and components. This ground shall carry no current and shall provide the ground fault return for the AC power system and the ground return for the instrumentation and control system electrical shields. The single point ground shall be the reference for the instrumentation and control system.
2. Instrument cable shall be shielded type and shall be installed in galvanized, rigid-steel conduit. PVC-coated GRS shall be used in corrosive areas.
3. Isolation. The system shall be designed to operate within performance specifications while exposed to the ambient electromagnetic environment.

K.12 Structural and Material Requirements

All instruments shall be of material compatible with the required environmental and service conditions. For critical elements, instruments, systems and equipment, a vendor certification shall be required to ensure that the device meets the environmental and operation requirements. When stainless steel hardware is necessary it shall be 316 SS.

This page intentionally left blank.

L. ATTACHMENT

Noise Attenuation Requirements

Noise attenuation requirements will be completed as part of final design.

This page intentionally left blank.

M. ATTACHMENT

CAD Standards

All drawings shall be prepared using AutoCAD Version 2013 (supplied by AutoDesk, Inc.) or latest version used by the SVCW. The final design teams shall follow SVCW's latest CAD standards in preparation of the final design drawings. The SVCW CAD standards are based on the United States National CAD Standard with some modifications.

This page intentionally left blank.

N. ATTACHMENT

Standard Details

This page intentionally left blank.

Civil Design Reference Details

This page intentionally left blank.

DIA.	A	B	C MIN.
24"	24"	9"	19"
27"	27"	9"	17.5"
30"	30"	9"	16"
36"	36"	9.5"	13"

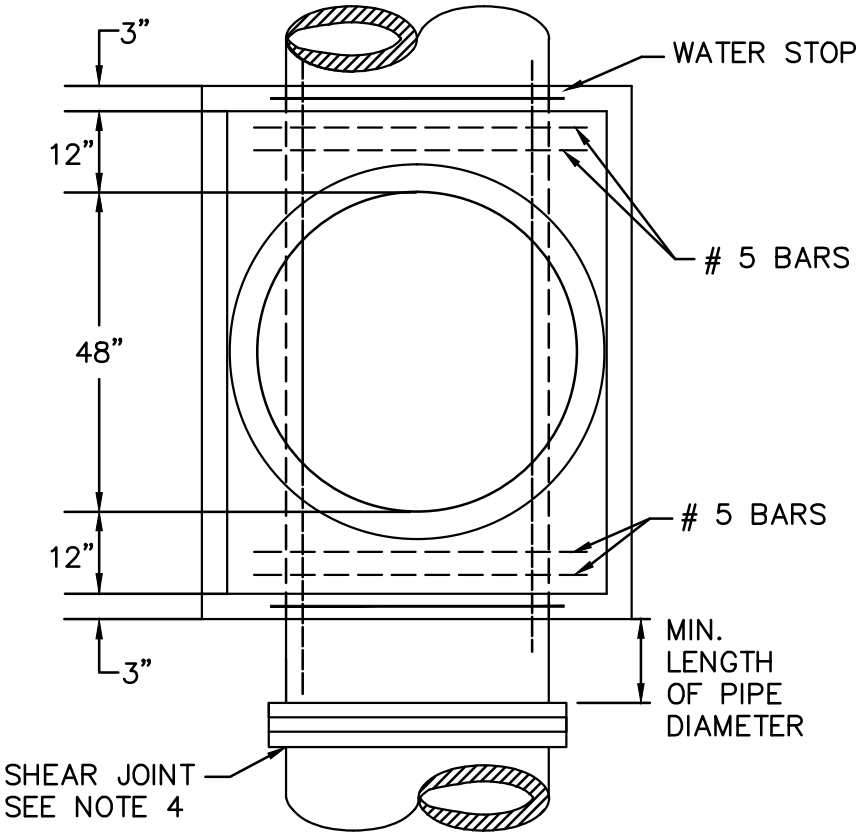

SECTION A–A

NOTES:

1) MANHOLE SHALL BE VACUUM TESTED.

2) ECCENTRIC CONE SHALL BE POSITIONED IN SUCH A MANNER OVER CENTER OF PIPE FOR INSTALLATION OF FLOW METER SENSOR BRACKET.

3) TRACE WIRE SHALL BE SOLID AND COATED 8 GAUGE COPPER WIRE PLACED 12" BELOW RIM WITH 3' COILED UP IN MANHOLE.

4) SHEAR JOINT SHALL BE INSTALLED ON ALL INCOMING AND OUTGOING PIPES A DISTANCE OF ONE PIPE DIAMETER AWAY FROM THE OUTSIDE OF THE MANHOLE.

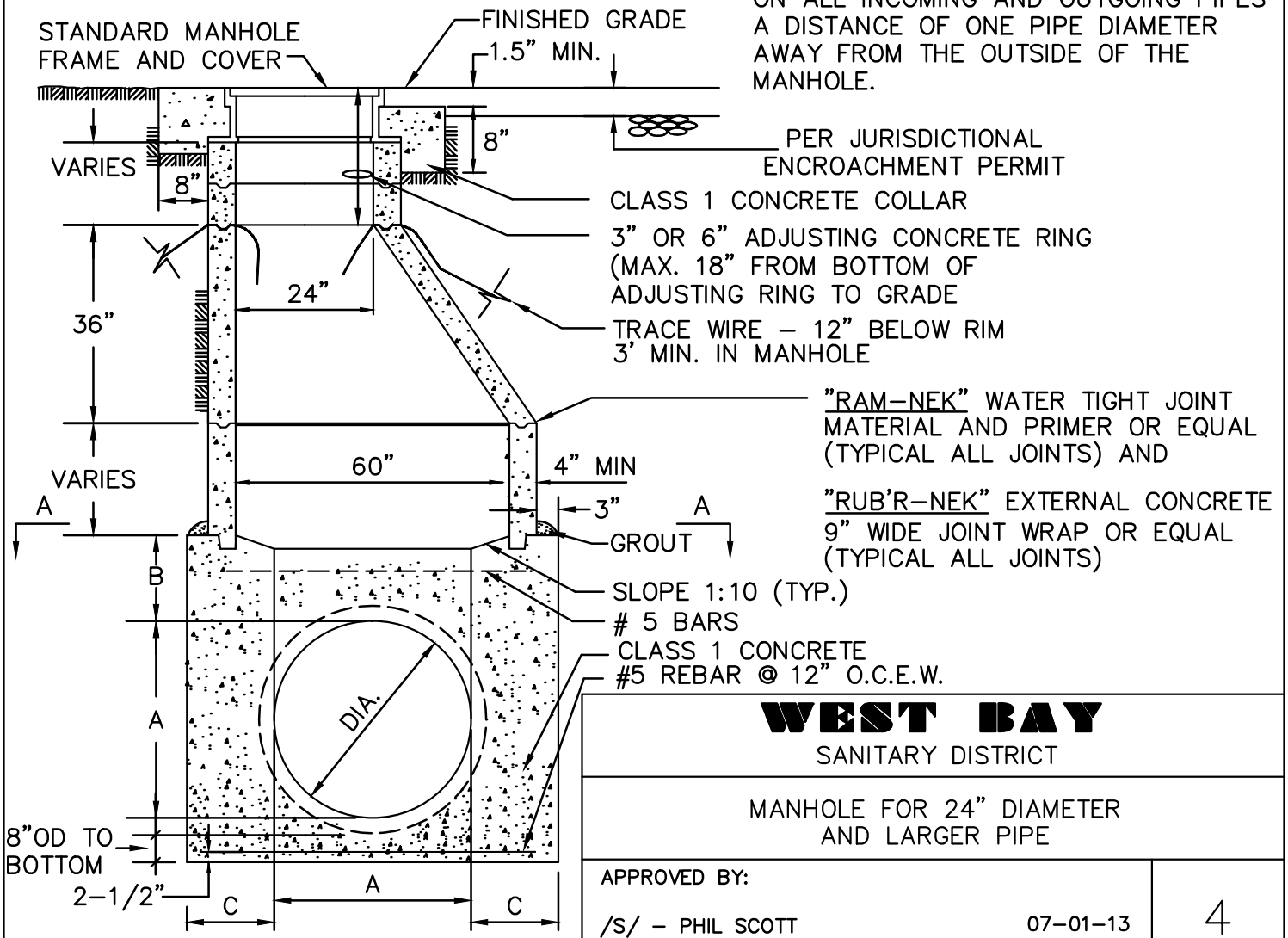

WEST BAY
SANITARY DISTRICT

MANHOLE FOR 24" DIAMETER AND LARGER PIPE

APPROVED BY:

/S/ – PHIL SCOTT
DISTRICT MANAGER

07–01–13
DATE:

4

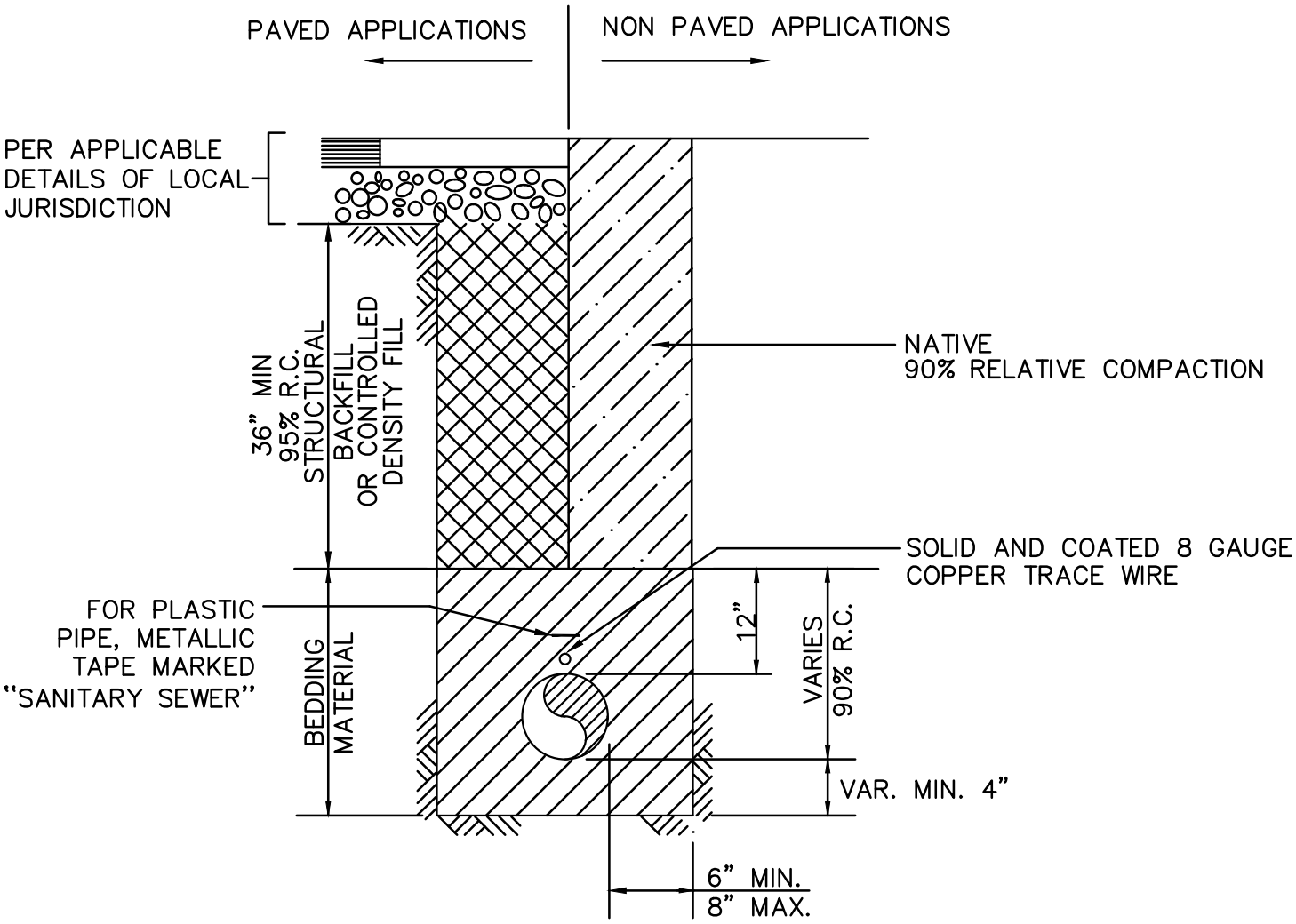

TYPICAL TRENCH SECTION

BEDDING MATERIAL

ANGULAR BEDDING MATERIAL REQUIREMENTS
PERCENT PASSING (CRUSHED DRAIN ROCK)

SIEVE SIZES	PERCENTAGE PASSING
1"	100
3/4"	90–100
3/8"	20–55
#4	0–10
#8	0–5

STRUCTURAL BACKFILL

STRUCTURAL BACKFILL REQUIREMENTS
PERCENT PASSING

SIEVE SIZES	PERCENTAGE PASSING
1–1/2"	100
3/4"	80–100
#4	30–60
#30	5–35
#200	0–12

WEST BAY
SANITARY DISTRICT

EXCAVATION, BACKFILL AND SURFACE RESTORATION

APPROVED BY:

/S/ – PHIL SCOTT — 07–01–13
DISTRICT MANAGER — DATE:

8

NOTES:

1. Provide a minimum drop of 0.10' across manhole when line bends and/or pipe diameter changes.
2. Concrete shall be Class A.
3. All joints shall be made water-tight with neoprene gaskets or Ram-neck.
4. Minimum crown elevation of smaller diameter inlet pipe shall be no less than the crown elevation of the outlet pipe without approval of City Engineer. Maximum drop from invert of inlet pipe to crown of outlet pipe shall be 1'-0".
5. Lay pipe through manhole when possible.
6. Top of pipe to be removed within manhole. Trim to neat line and finish off with grout to leave a smooth finish.
7. Provide two joints at all entry points to manholes.
8. Reinforced concrete manhole sections shall be precast, and shall conform to ASTM C-478.

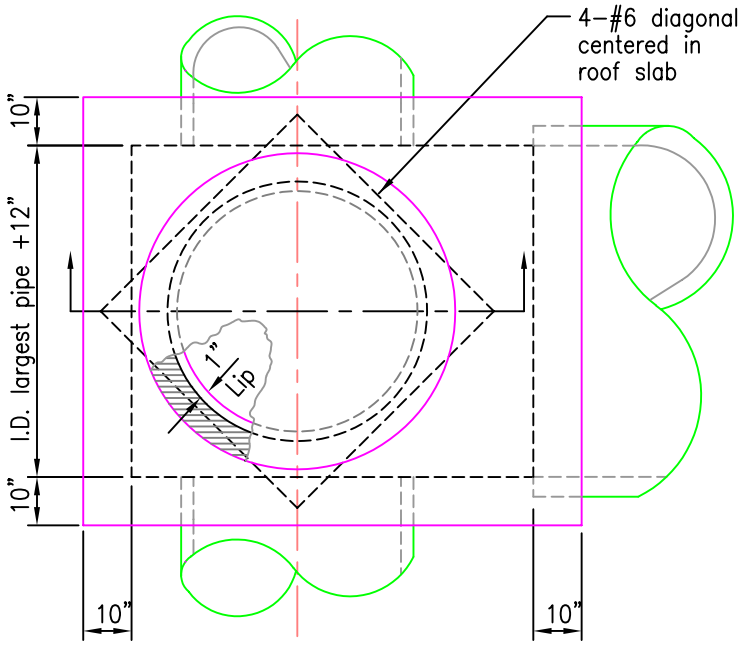

PLAN

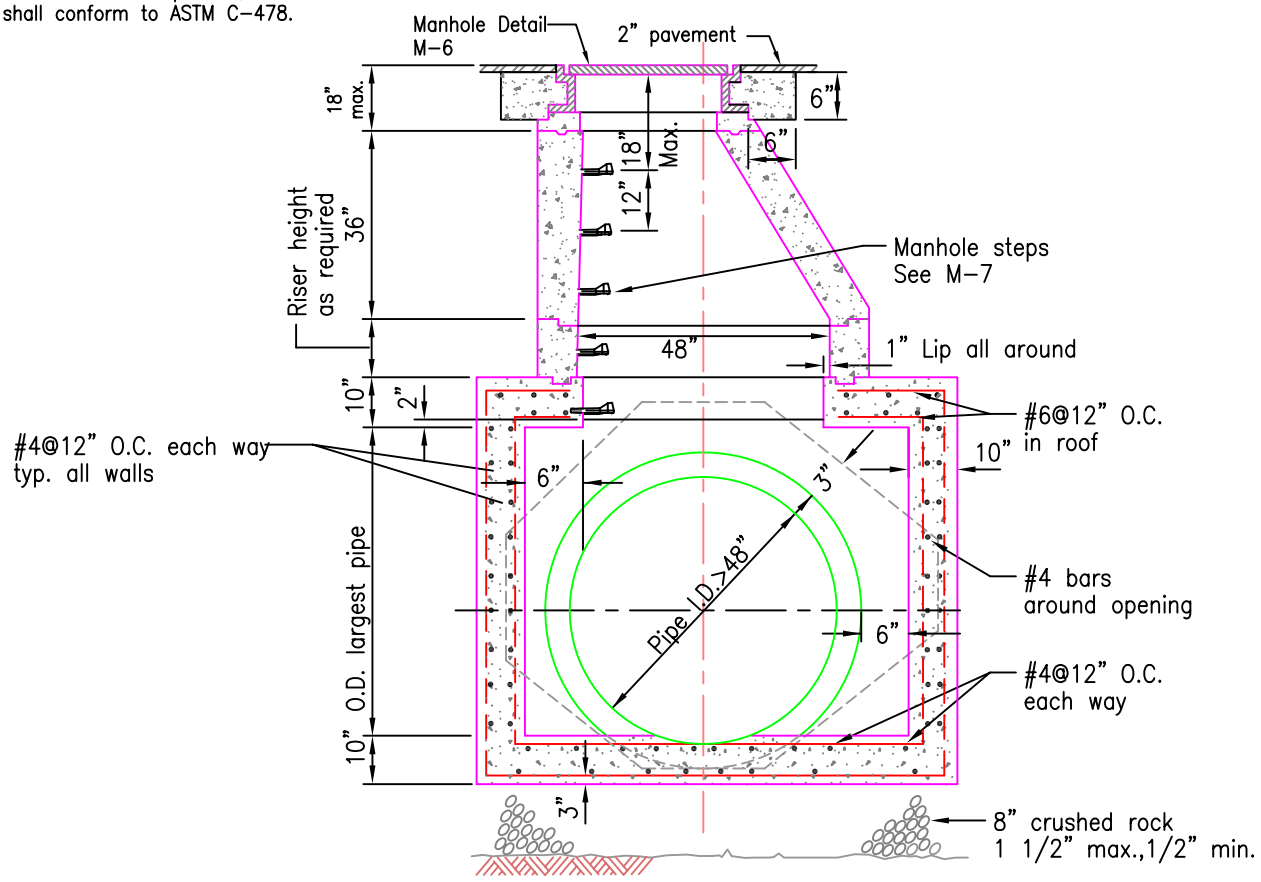

SECTION

NOT TO SCALE

STANDARD DETAIL	CITY OF REDWOOD CITY ENGINEERING AND CONSTRUCTION	
DATE: 12/04/06	**TYPE III MANHOLE** (PIPES LARGER THAN 48")	M - 5 SHT 1 OF 1

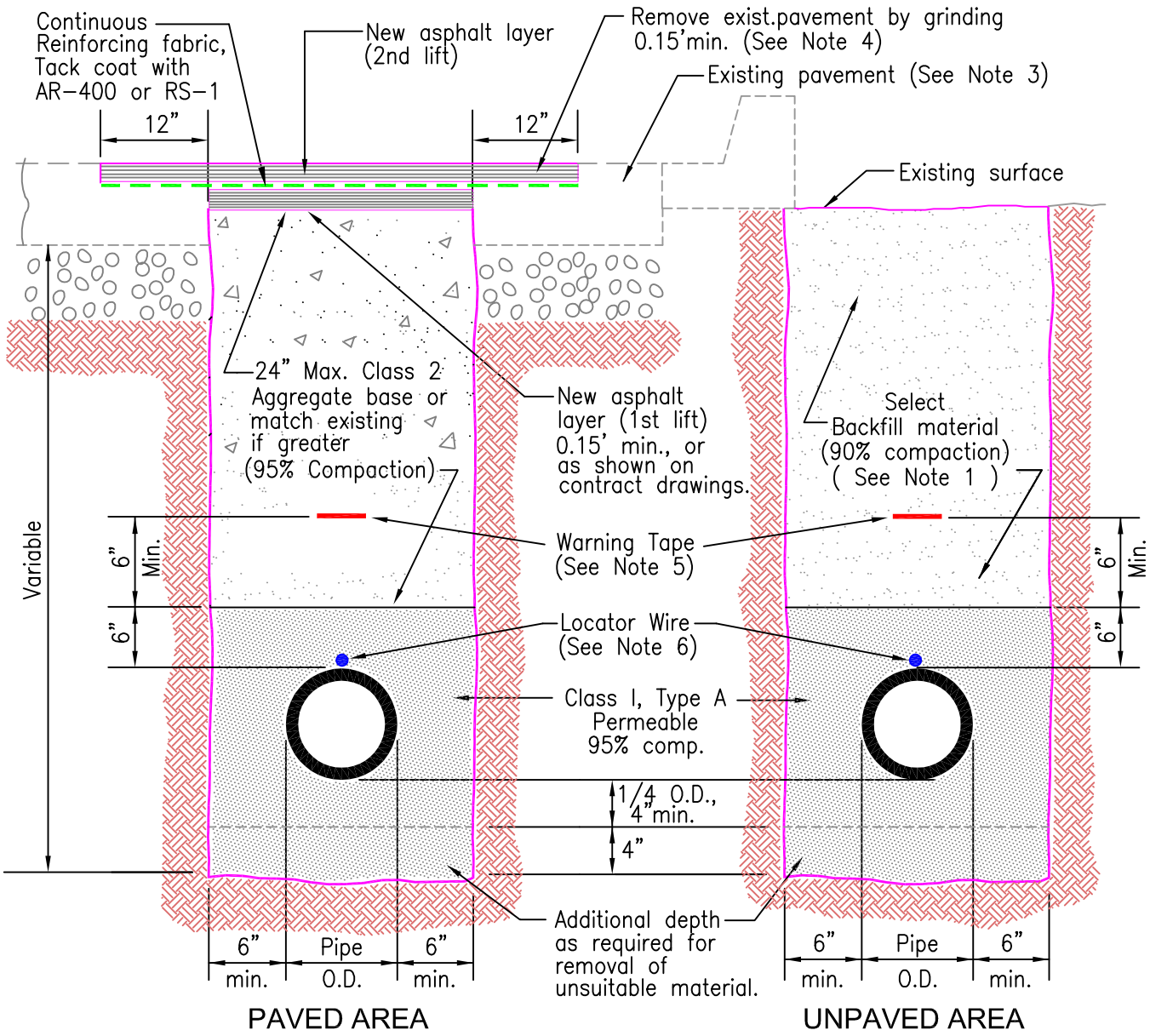

NOTES:

1. Select backfill material – material from excavation, free from stones or lumps exceeding 3" in greatest dimension, vegetable matter, or unsatisfactory material. (See Specifications)
2. For new streets use design structural section as shown on plans.
3. If the edge of the trench falls within 3' of the gutter, the entire pavement shall be removed.
4. If existing pavement is less than 3" thick, pavement edge shall be sawcut to full depth in lieu of grinding.
5. Place Warning Tape 14" above pipe.
6. Place locator wire atop pipe.

NOT TO SCALE

STANDARD DETAIL	CITY OF REDWOOD CITY ENGINEERING AND CONSTRUCTION	
DATE: 12/04/06	**UTILITY TRENCH DETAIL** (BAY MUD)	UT - 2 SHT 1 OF 1

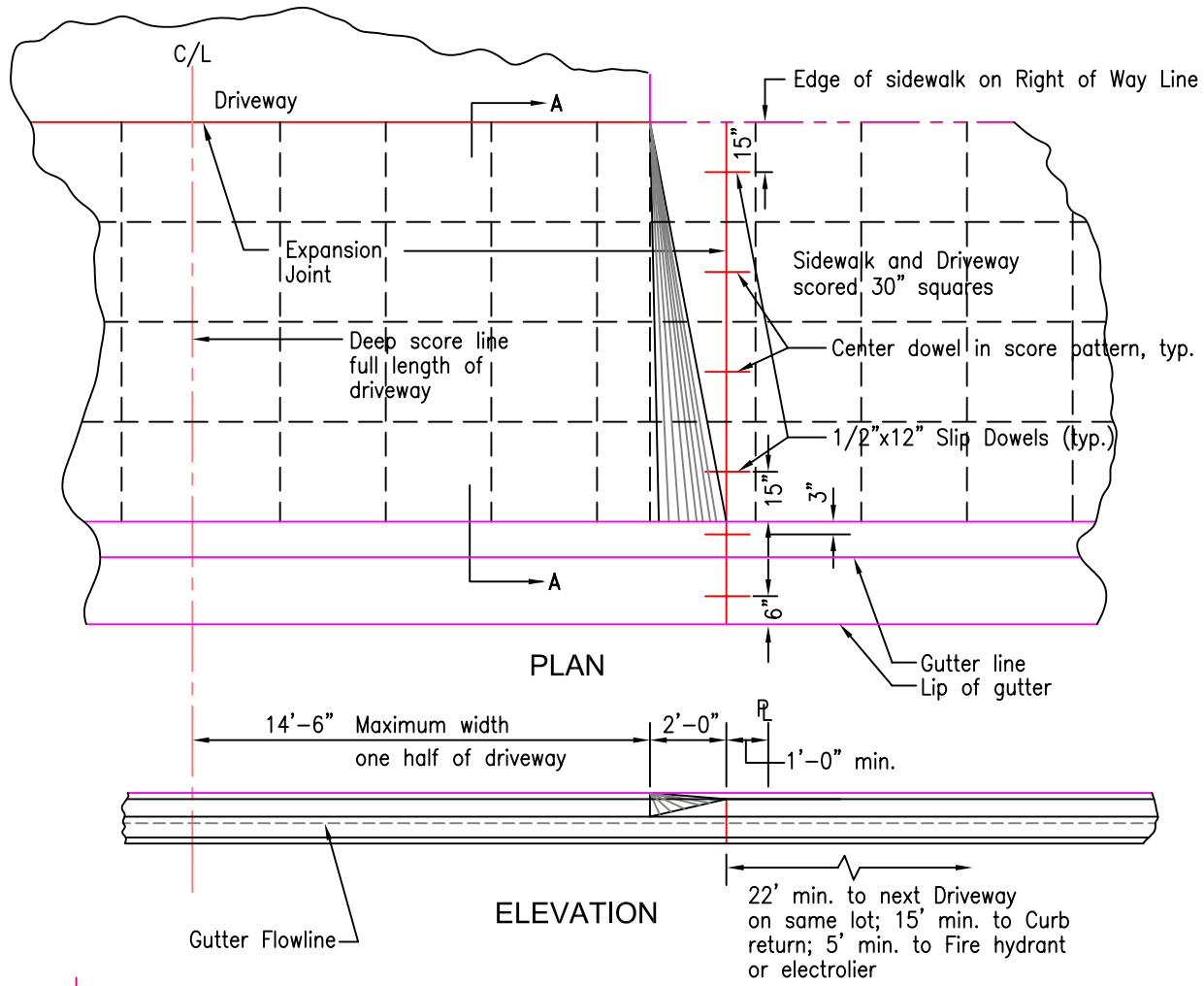

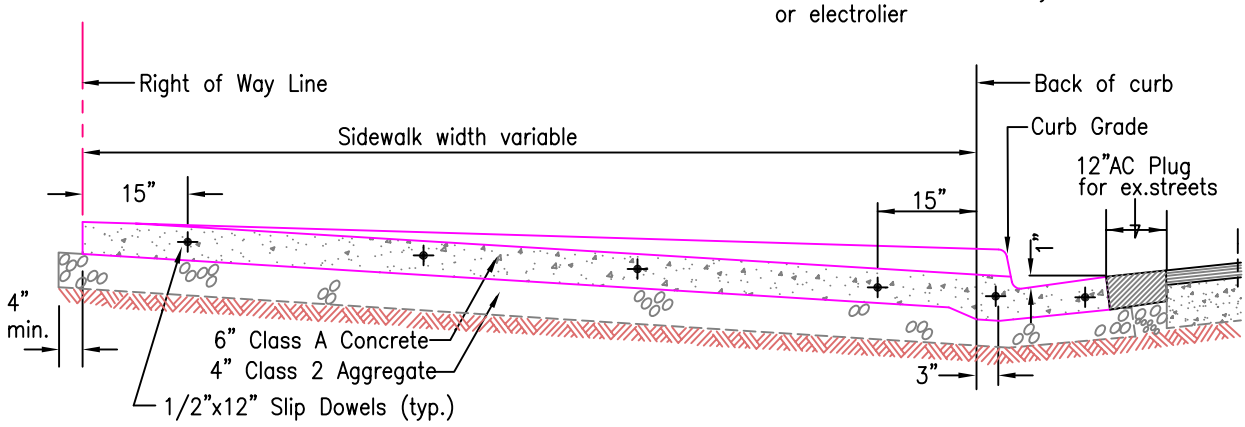

SECTION A-A

NOT TO SCALE

STANDARD DETAIL	CITY OF REDWOOD CITY ENGINEERING AND CONSTRUCTION	
DATE: 12/04/06	**COMMERCIAL DRIVEWAY APPROACH**	C - 2 SHT 1 OF 1

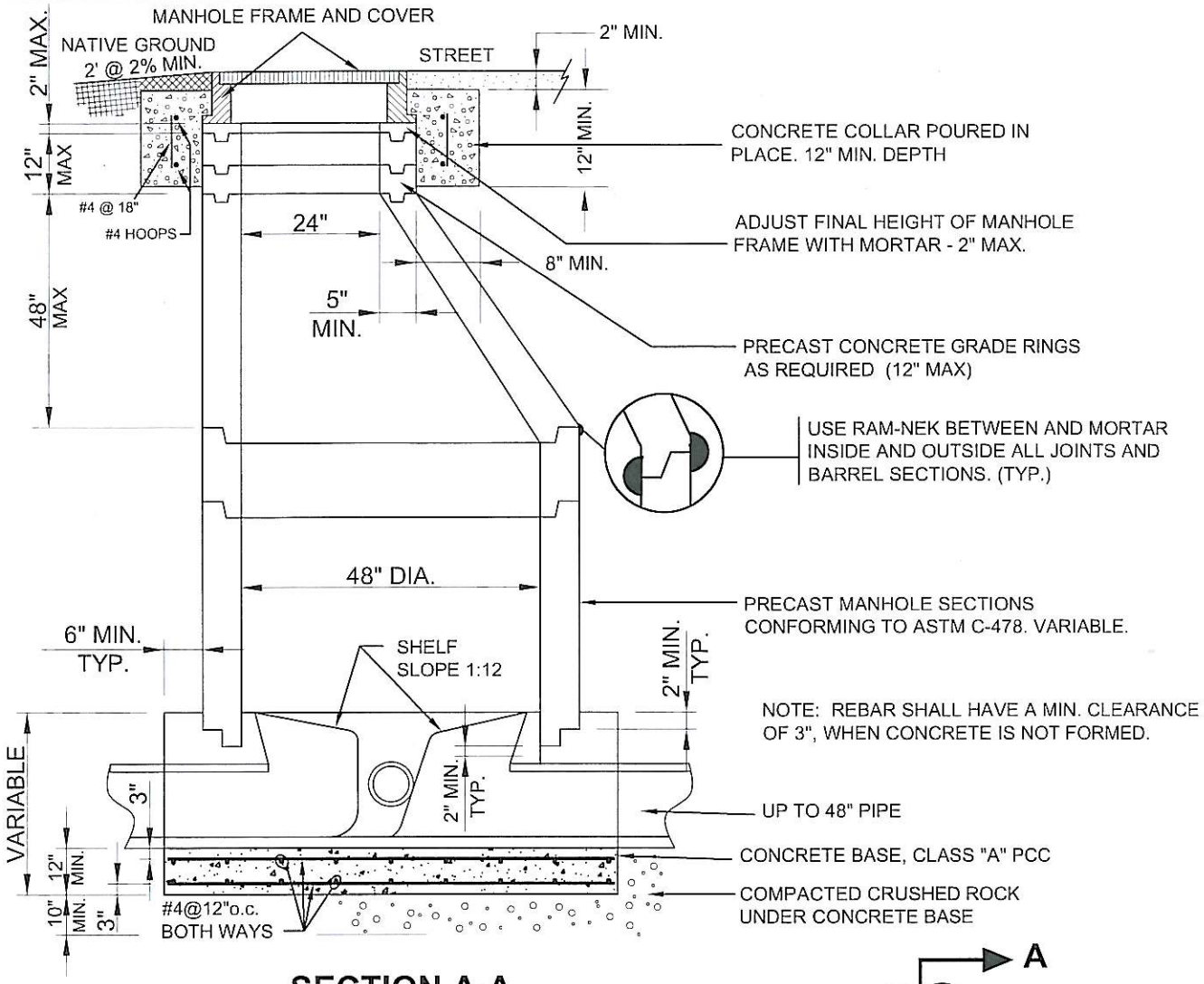

SECTION A-A

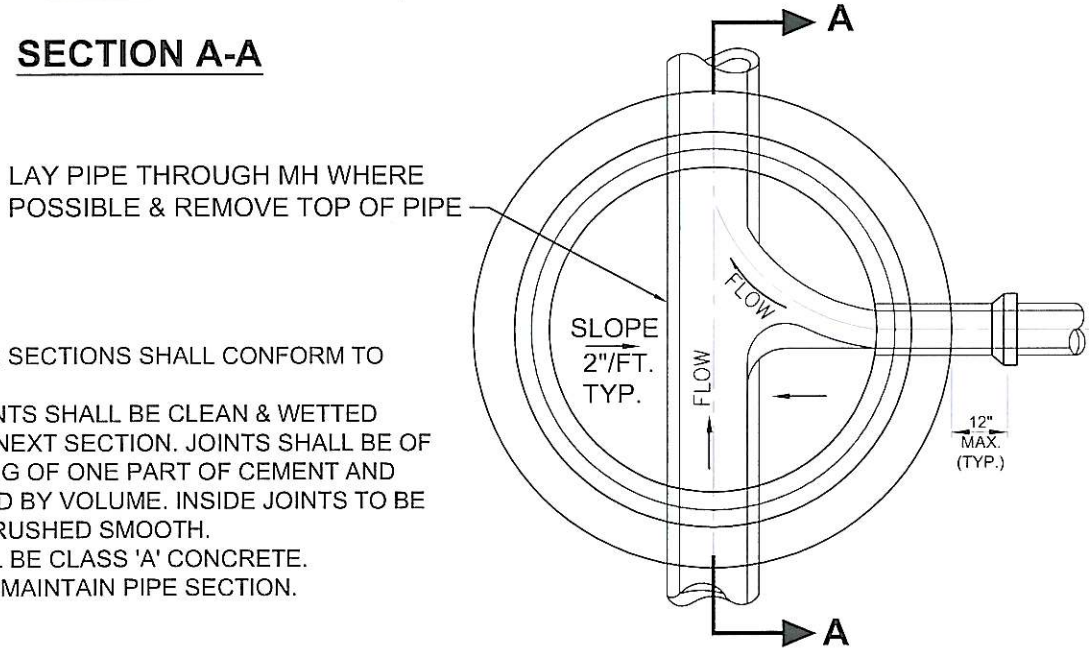

SECTIONAL PLAN

NOTES:

1. PRECAST MANHOLE SECTIONS SHALL CONFORM TO ASTM C478-74.
2. ALL CONCRETE JOINTS SHALL BE CLEAN & WETTED PRIOR TO SETTING NEXT SECTION. JOINTS SHALL BE OF MORTAR CONSISTING OF ONE PART OF CEMENT AND 1-1/2 PARTS OF SAND BY VOLUME. INSIDE JOINTS TO BE STRUCK FLUSH & BRUSHED SMOOTH.
3. FOUNDATION SHALL BE CLASS 'A' CONCRETE.
4. FORM CHANNEL TO MAINTAIN PIPE SECTION.

CITY OF SAN CARLOS, CALIFORNIA STANDARD DETAIL

APPROVED BY: RCW
CITY ENGINEER
DATE: APRIL 2, 2010

STANDARD PRECAST MANHOLE

STD. DETAIL No. **11**

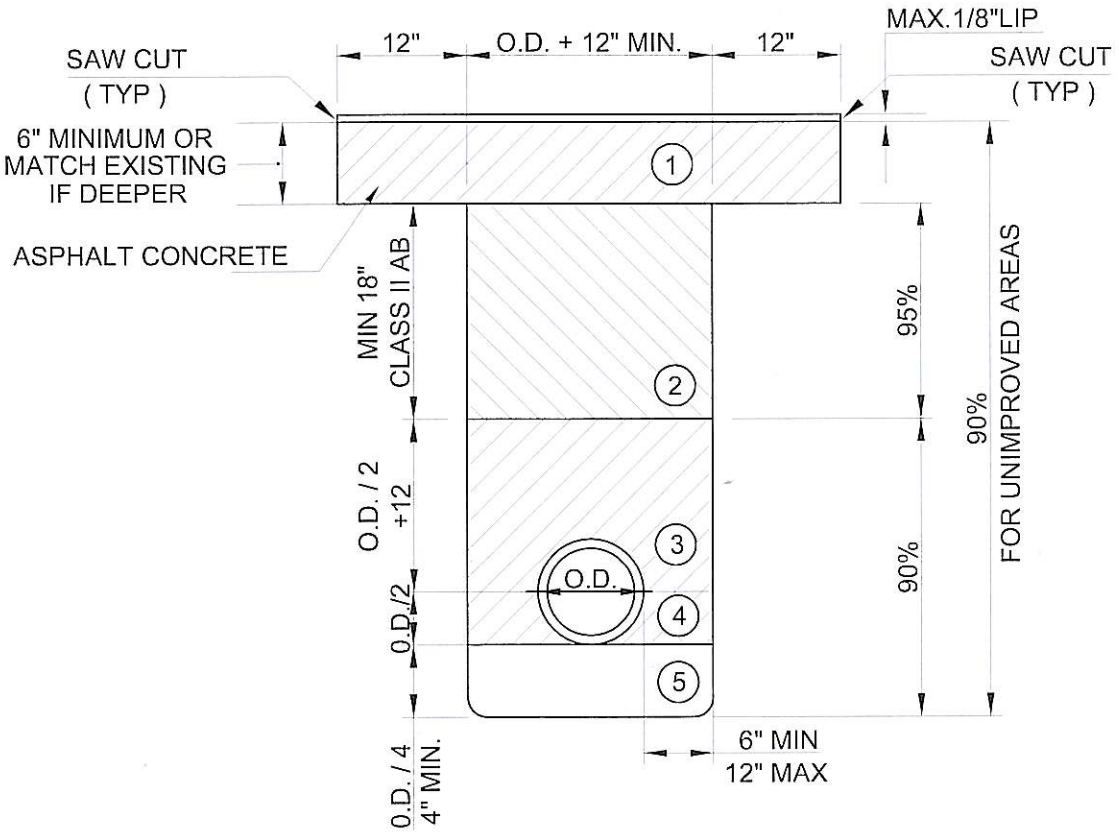

MATERIAL LOCATION	BACKFILL MATERIALS		COMPACTION METHOD
1	STREET AREA-6" ASPHALT CONCRETE (UNIMPROVED AREAS-AGGREGATE OR NATIVE MATERIAL) AS APPROVED BY THE CITY ENGINEER.		MECHANICAL (EXCEPT UNIMPROVED AREAS MAY BE JETTED WITH ENGINEER`S APPROVED. MECHANICAL COMPACTION EXCEPTION: WHEN SAND IS USED IT SHALL BE JETTED OR VIBRATED. NECESSARY FOR CDF.
2	CLASS II AGGREGATE BASE OR MATERIALS APPROVED BY THE CITY ENGINEER.		
3	CLASS II AGGREGATE BASE OR APPROVED NATIVE EXCEPT SAND FOR VCP OR APPROVED CDF.		
4	SAND OR DRAIN ROCK	CRUSHED AGGREGATE BASE OR APPROVED NATIVE EXCEPT SAND FOR VCP OR APPROVED CDF.	
5	3/4" MAX. CRUSHED ROCK		MECHANICAL COMPACTION OR JETTED AS DIRECTED

CITY OF SAN CARLOS, CALIFORNIA STANDARD DETAIL

APPROVED BY: R C Weil
CITY ENGINEER
DATE: July 31, 2009

STANDARD TRENCH DETAIL

STD. DETAIL No. **18**

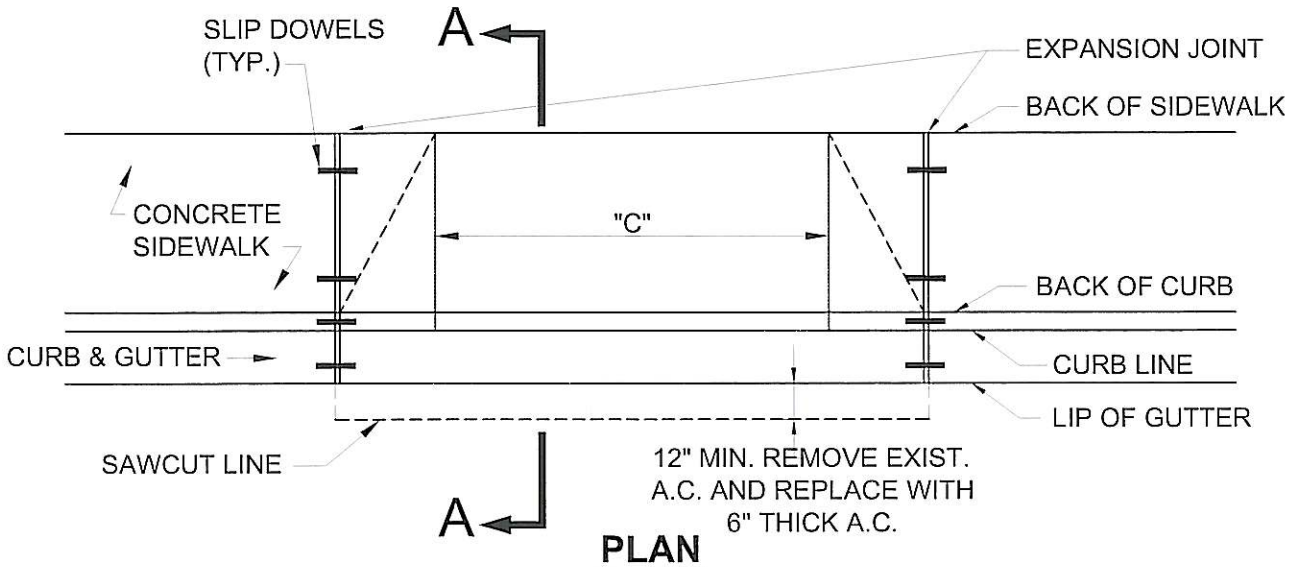

PLAN

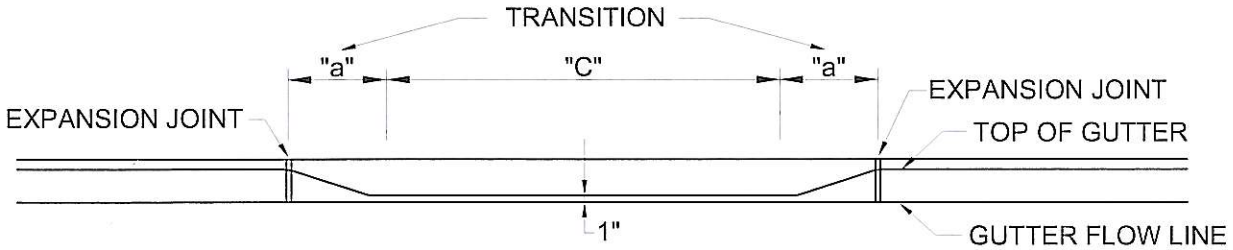

FRONT ELEVATION

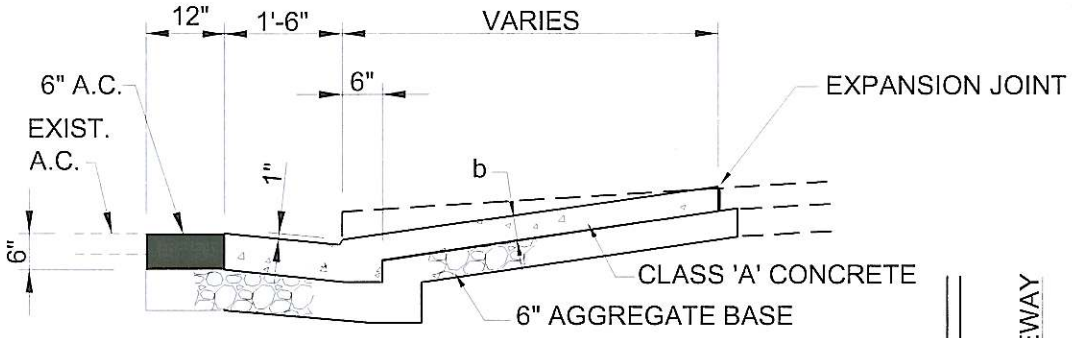

SECTION A-A

TYPE DRIVEWAY	a	b	c (Maximum)
RESIDENTIAL	1'-6"	4"	SINGLE GARAGE 14' DOUBLE GARAGE 23'
COMMERCIAL	4'-0"	6"	30'

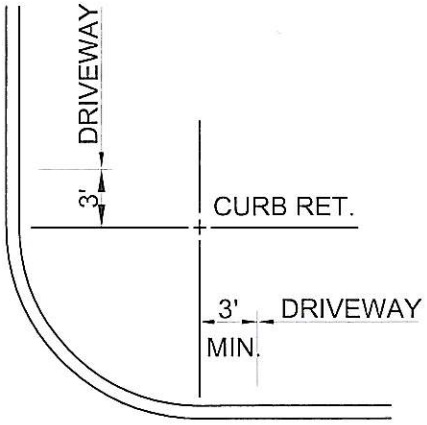

CITY OF SAN CARLOS, CALIFORNIA STANDARD DETAIL

APPROVED BY: RCW
CITY ENGINEER
DATE: SEPTEMBER 15, 2010

COMMERCIAL AND RESIDENTIAL DRIVEWAYS

STD. DETAIL No.
9

O. ATTACHMENT

Sole Source Specification and Purchase of Standardized Equipment List

This page intentionally left blank.

Sole Source Specification and Purchase of Standardized Equipment List
Approved via Resolution at September 13, 2012 SBSA Commission Meeting

The following list of equipment eligible to sole source is valid for a five-year period from September 2012 to September 2017. This list does not REQUIRE the listed equipment to be sole-sourced; it ALLOWS the equipment to be sole-sourced if deemed appropriate. The following list is subject to updates.

Equipment to Match Existing for Standardization:

Equipment	***Manufacturer***	***Location Used***	***Reason for Sole Source***
Temperature Monitoring	Rosemount	Hot Water System	Match Existing Equipment for Standardization and Proven Effective and Reliable
Gas Flow Monitoring	FCI	Biogas and Natural Gas Systems	Match Existing Equipment for Standardization and Proven Effective and Reliable
Thermal Dispersion Flow Monitoring	FCI	Hot Water and Lube Oil Systems	Match Existing Equipment for Standardization and Proven Effective and Reliable
Sludge Heat Exchanger	Alpha-Laval	Sludge Heating System	Match Existing Equipment for Standardization and Proven Effective and Reliable
Power Distribution Panel[1]	Eaton Cutler-Hammer	Electrical Power Distribution	Match Existing Equipment for Standardization
Paints and Coatings	Sherwin-Williams	Walls, Tanks, Digester Domes, Piping	Standardize, Proven Effective and Reliable; also Tested as Effective and Recommended
Positive Displacement Pumps	Moyno	Thickeners, Digesters, Dewatering, Grease Receiving Station	Match Existing Equipment for Standardization
Centrifugal Pumps	FloServe (Worthington)	Final Effluent, DMFs, RAS, Pump Stations	Match Existing Equipment for Standardization
Centrifugal Pumps	WEMCO	Primary Sludge	Match Existing Equipment for Standardization
Gas Management	Varec	Digester Gas	Match Existing Equipment for Standardization
Grinders	Franklin Miller	Pump Stations	Tests on various manufacturers proved this one effective

Equipment	***Manufacturer***	***Location Used***	***Reason for Sole Source***
Valves	Pratt	Various and numerous locations	Match Existing Equipment for Standardization
Plug Valves	Dezurik	Various and numerous locations	Match Existing Equipment for Standardization
Sample Pumps	Paco	Various and numerous locations	Match Existing Equipment for Standardization
Submersible Pumps	WILO	Bilge system	Match Existing (4 pumps)
Submersible Pumps	FloServe (Worthington)	Stormdrain System	Match Existing (3 pumps)
Electrical Parts	Allen Bradley	Electrical Equipment and Motor Drives	Match Existing Equipment For Standardization
Pump Station Flow Meters	Thermo Scientific (Doppler)	Pump Stations	Standardized and proven effective
Flow Monitoring	Flowtect (pressure switch)	Eyewash/Emergency Showers	Standardized and proven effective
Pressure Monitoring	Rosemount	No. 3 Water Uses	Standardized and proven effective
Turbidity	Hach	DMF Effluent	Matching existing (7)
Chlorine Analyzers	DULCO	Disinfection, Recycled Water, Dechlorination	Match Existing and only one found to work consistently
Hypochlorite and bisulfite peristaltic dosing pumps	Watson Marlow	Hypo and bisulfate storage tanks	Standardized and proven effective
Hydrogen Sulfide meter	Arizona Instrument	Digester Gas and various staff and instrument buildings	Match Existing Equipment (2) which have operated for 18 years
Flow-through Bioassay System	Aqua Science	Final Effluent monitoring n Laboratory	Sole provider for Cal EPA Region 2 Dischargers
Steam sterilizer	Getinge	Disinfect Lab materials and media	Standardize, Proven Effective and Reliable
Switches, Routers and other Network Appliances	Cisco	Data Center	Match Existing Equipment for Standardization and Proven Effective & Reliable
Servers and Storage Devices	Dell	Data Center	Match Existing Equipment for Standardization and Proven Effective & Reliable
Uninterruptable Power Supply (UPS)	Eaton/Powerware	Data Center	Match Existing Equipment for Standardization and Proven Effective & Reliable

Equipment Selected based on Testing and Efficacy[1]:

Equipment	***Manufacturer***	***Location Used***	***Reason for Sole Source***
Ultrasonic Level Monitoring	Siemens (aka Milltronics)	Various locations	Tests on various manufacturers proved this one effective
In-Plant Flow Meters	Krohne (Magnetic) Rosemount (Magnetic) Thermo Scientific (Doppler)	Various locations with high solids content material	Tests on various manufacturers proved these effective
Pressure Level Transducers	Rosemount Druck (hydrostatic)	Various locations	Tests on various manufacturers proved these effective
pH Monitoring	Horiba	Various locations	Tests on various manufacturers proved this one effective
TSS Monitoring[1]	Cerlic ITX (in-line)	RAS, WAS, Thickener Overflow, Effluent	Tested and recommended
MLSS Monitoring[1]	Cerlic ITX (immersion style)	Aeration basins	Tested and recommended
Dissolved Oxygen[1]	Cerlic O2X	Aeration basins	Tested and recommended
Sludge Blanket Level[1]	Entech EchoSmart	Secondary Clarifiers	Tested and recommended

[1]Reference Instrumentation Screening and Evaluation Technical Memorandum for Activated Sludge Process Automation Design (CIP 8017), December 20, 2010, by Kennedy/Jenks

Basis for ability to Sole Source Equipment, Material, Product, Service

SBSA's purchasing guidelines are delineated by the charter of the City of Redwood City which, in turn, is guided by the Public Contracts Code (PCC). One of the statutes in the PCC (Section 3400) restricts public agencies from drafting specifications for bids (1) in a manner that limits the bidding, directly or indirectly, to any one specific concern, or (2) calling for a designated material, product, thing, or service by specific brand or trade name unless the specification is followed by the words "or equal" that that bidders may furnish any equal material, product, thing, or service. However, this subdivision is not applicable under certain circumstances, including:

(1) in order for a field test or experiment to be made to determine the product's suitability for future use
(2) in order to match other products in use on a particular public improvement either completed or in the course of completion
(3) in order to obtain a necessary item that is only available from one source or
(4) in order to respond to an emergency declared by a local agency or by the state.

Appendix F: Contract Documents for the Construction of Pump Station 2, Predesign Submittal

Brown and Caldwell, January 2015

This page intentionally left blank.

SILICON VALLEY CLEAN WATER

San Mateo County, California

CONTRACT DOCUMENTS FOR THE CONSTRUCTION OF

PUMP STATION 2

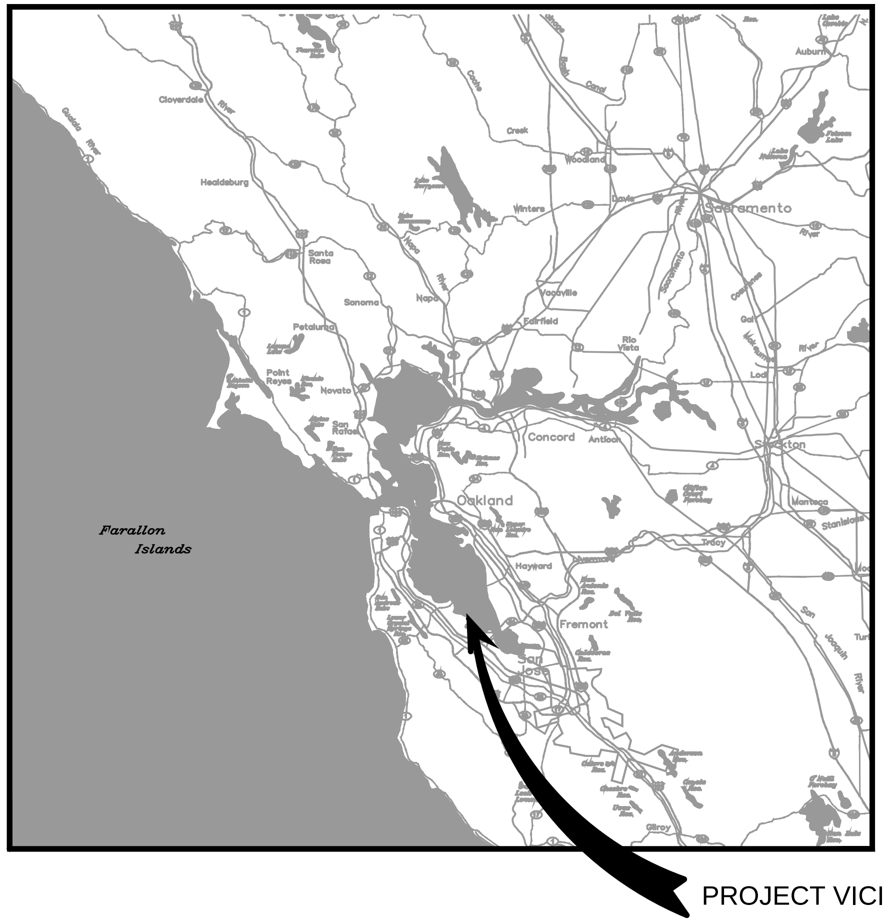

VICINITY MAP
NO SCALE

SVCW
Silicon Valley Clean Water

LOCATION MAP
NO SCALE

PREDESIGN SUBMITTAL

General, Civil, Structural, Process and Instrumentation, Mechanical and Electrical Drawings

JANUARY 2015

Brown AND Caldwell
WALNUT CREEK, CALIFORNIA

SHEET 00 OF 67
COPY NUMBER-00

Xref Filename: | Califmap |
Path: P:\142000\142399 - SBSA Pump Station Predesign\CADD\2-SHEETS\G-GENE Filename: COVER PAGE_SITE LOCATION_MAP AND DRAWING LIST Plot date: Jan 13, 2015-12:29:31pm CAD User: FBurke.

INDEX OF DRAWINGS

SHEET NUMBER	DRAWING NUMBER	DRAWING TITLE
		GENERAL
		COVER PAGE AND SITE LOCATION/MAP
01	G-001-052	INDEX OF DRAWINGS
02	G-002-052	DESIGNATION SYSTEMS AND KEY ABBREVIATIONS
03	G-003-052	ABBREVIATIONS
		CIVIL
04	CD-101-052	DEMOLITION PLAN
05	C-101-052	PLAN
		STRUCTURAL
06	S-001-052	GENERAL NOTES 1
07	S-002-052	GENERAL NOTES 2
08	S-003-052	WET WELL PLAN, SECTION AND DETAIL
09	S-004-052	WET WELL SECTION AND DETAILS
10	S-005-052	DETAILS 1
11	S-006-052	DETAILS 2
12	S-101-052	SCREENING BUILDING LOWER LEVEL PLAN
13	S-102-052	SCREENING BUILDING GROUND FLOOR PLAN
14	S-103-052	SCREENING BUILDING UPPER LEVEL PLAN
15	S-104-052	WET WELL AND VALVE VAULT BOTTOM PLAN
16	S-105-052	WET WELL AND VALVE VAULT INTERMEDIATE PLAN
17	S-106-052	WET WELL AND VALVE VAULT TOP PLAN
18	S-107-052	SURGE AND EFFLUENT METER VAULT PLANS AND SECTIONS
19	S-301-052	SCREENING BUILDING SECTIONS
20	S-302-052	SCREENING BUILDING SECTION
21	S-303-052	WET WELL AND VALVE VAULT SECTION
22	S-304-052	WET WELL AND VALVE VAULT SECTION
		PROCESS AND INSTRUMENTATION
23	I-001-052	PROCESS SYMBOLS
24	I-002-052	INSTRUMENTATION SYMBOLS AND IDENTIFICATION SYSTEMS
25	I-003-052	INSTRUMENTATION DETAILS 1
		INFLUENT SCREENING
26	I-601-052	INFLUENT SCREEN 1
27	I-602-052	INFLUENT SCREEN 2 AND MANUAL BAR SCREEN
28	I-603-052	SCREENING WASHERS AND COMPACTORS
		WET WELL 1
29	I-604-052	WET WELL 1 PUMP 1 AND PUMP 2
30	I-605-052	WET WELL 1 PUMP 3 AND PUMP 4
31	I-606-052	WET WELL 1 VALVE VAULT 1
		WET WELL 2
32	I-607-052	WET WELL 2 PUMP 5 AND PUMP 6
33	I-608-052	WET WELL 2 PUMP 7 AND PUMP 8
34	I-609-052	WET WELL 2 VALVE VAULT 2
		FLOW METER STATION
35	I-610-052	EFFLUENT FLOW MONITORING
		ODOR CONTROL
36	I-611-052	SUPPLY FANS 3 AND 4
37	1-612-052	SUPPLY FANS 5 AND 6
38	I-613-052	EXHAUST FANS 1 AND 2
39	I-614-052	EXHAUST FANS 3 AND 4
40	I-615-052	EXHAUST FAN 5 AND ODOR CONTROL SYSTEM
		POWER GENERATION
41	I-616-052	DIESEL FUEL STORAGE TANK
42	I-617-052	STANDBY POWER GENERATION SYSTEM
		SURGE CONTROL
43	I-618-052	AIR COMPRESSORS
44	I-619-052	ACCUMULATOR SYSTEM 1
45	I-620-052	ACCUMULATOR SYSTEM 2

INDEX OF DRAWINGS, CONTINUED

SHEET NUMBER	DRAWING NUMBER	DRAWING TITLE
		MECHANICAL
46	MD-101-052	PIPEWORK & EQUIPMENT PLANS
47	MD-102-052	PIPEWORK & EQUIPMENT SECTIONS
48	MD-103-052	PIPEWORK & EQUIPMENT HYPOCHLORITE SYSTEM DETAILS
49	M-101-052	SCREENINGS FACILITY AND EFFLUENT FLOW METER PLAN
50	M-102-052	WET WELL AND VALVE VAULT PLAN
51	M-103-052	SURGE CONTROL PLAN
52	M-301-052	SCREENINGS SECTIONS
53	M-302-052	WET WELL AND VALVE VAULT SECTION
54	M-303-052	WET WELL AND VALVE VAULT SECTIONS
55	M-304-052	SURGE CONTROL SECTION
56	MH-001-052	STANDARD DETAILS
57	MH-101-052	GROUND FLOOR AND MOTOR ROOM PLANS
		ELECTRICAL
58	E-001-052	LEGEND AND NOTES 1
59	E-002-052	LEGEND AND NOTES 2
60	E-003-052	ABBREVIATIONS AND NOTES
61	E-004-052	DETAILS 1
62	E-005-052	DETAILS 2
63	E-006-052	DETAILS 3
64	E-007-052	DETAILS 4
65	E-601-052	PS2_PWR_MCC_02001 ONE LINE DIAGRAM
66	E-602-052	PS2_PWR_MCC_02001 AND PS2_PWR_MCC_02002 ONE LINE DIAGRAMS
67	E-603-052	SWITCHBOARD, MCC AND VFD ELEVATIONS

PROCESS AREA DESIGNATIONS

1W	NO. 1 WATER SYSTEM (POTABLE WATER)
2W	NO. 2 WATER SYSTEM (DOWNSTREAM FR/BFP)
3W	NO. 3 WATER SYSTEM
4W	RECYCLED WATER
AB	AERATION BASINS
ASC	AIR SCOUR
AS	ACTIVATED SLUDGE
AUX	AUXILIARY SYSTEMS
BLG	BILGE
BLR	BOILER
BPS	BELMONT PUMP STATION
BW	BACKWASH
CV	CHEMICAL VENT
DW	DEWATERING
D	DRAIN
DRC	DIGESTER RECIRCULATION
DMF	DUAL MEDIA FILTERS
ED	EQUIPMENT DRAIN
EPT	ENHANCED PRIMARY TREATMENT
FE	FINAL EFFLUENT
FEF	FLOW EQUALIZATION FACILITY
FEP	FINAL EFFLUENT PUMPING
FFR	FIXED FILM REACTOR
GEN	STANDBY GENERATOR
GRS	GREASE RECEIVING STATION
GRT	DEGRITTING
GT	GRAVITY SLUDGE THICKENER
HDW	HEADWORKS
HEX	HEAT EXCHANGER
HVA	HEATING VENTILATION AIR CONDITIONING
HWR	HOT WATER RETURN
HWS	HOT WATER SUPPLY
IA	INSTRUMENT AIR
ILS	INFLUENT LIFT STATION
INF	INFLUENT
MPS	MENLO PARK PUMP STATION
PD	PLANT DRAIN
PE	PRIMARY EFFLUENT
PS	PRIMARY SEDIMENTATION
PSC	PRIMARY SCUM
PSL	PRIMARY SLUDGE
PWR	ELECTRICAL POWER
Q	FLOW
RAS	RETURN ACTIVATED SLUDGE
RPS	REDWOOD CITY PUMP STATION
SBS	DECHLORINATION (SODIUM BISULFITE)
SPS	SAN CARLOS PUMP STATION
SD	STORM DRAIN SYSTEM
SEP	SEPTAGE
SE	SECONDARY EFFLUENT
SEC	SECONDARY CLARIFIERS
SLD	SLUDGE DISPOSAL
SRG	SURGE
SS	SANITARY SEWER
SW	SITE WASTE SYSTEM
THS	THICKENED SLUDGE
WAS	WASTE ACTIVATED SLUDGE
WGB	WASTE GAS BURNER

PROCESS FUNCTION DESIGNATIONS

CNT	CONTROL
DRN	DRAIN
DIS	DISCHARGE
FIL	FILL
GS	GENERAL SERVICE
INL	INLET
ISL	ISOLATION
MET	METERING
MIX	MIXING
MOD	MODULATING
OUT	OUTLET
REC	RECIRCULATION
RET	RETURN
SCR	SCREEN
SPR	SPRAY
SUP	SUPPLY
SUC	SUCTION
SUM	SUMP
TRS	TRANSFER

EQUIPMENT DESIGNATIONS

BLW	BLOWER
DU	DRIVE UNIT
FAN	FAN
FE	FLOW ELEMENT
GDR	GRINDER
GEN	GENERATOR
HEX	HEAT EXCHANGER
MBS	MECHANICAL BAR SCREEN
MME	MISCELLANEOUS MECHANICAL EQUIPMENT
MTR	MOTOR
PMP	PUMP
RFP	ROTARY FAN PRESS
SG	SLIDE GATE
SKM	SKIMMER
VFD	VARIABLE FREQUENCY DRIVE
VLV	VALVE
WC	WASHER/COMPACTOR
WGB	WASTE GAS BURNER

SEQUENTIAL NUMBER

FIRST TWO DIGITS	SVCW LOCATION CODES
THIRD DIGIT	UNIT NUMBER
FOURTH AND FIFTH DIGIT	SEQUENTIAL NUMBER

LOCATION CODE DESIGNATIONS

ABBREVIATION	LOCATION CODE
051	PUMP STATION 1
052	PUMP STATION 2
053	PUMP STATION 3

TAGGING/LABELING CONVENTION EXAMPLES

TAGGING/LABELING CONVENTION TABLES

PROCESS AREA - PROCESS FUNCTION - EQUIPMENT DESIGNATOR - SEQUENTIAL NUMBER

EXAMPLE OF PRIMARY SLUDGE PUMP #1

PROCESS AREA - PRIMARY SLUDGE =PSL
PROCESS FUNCTION - TRANSFER= TRS
EQUIPMENT DESIGNATOR - PUMP= PMP
SEQUENTIAL NUMBER - ALWAYS 5 DIGITS - VARIES=14101

DIGIT 1 AND 2 PRIMARY SEDIMENTATION--14
DIGIT 3 UNIT NUMBER--1
DIGIT 4 AND 5 SEQUENCING NUMBER--01

EXAMPLE OF PRIMARY SLUDGE PUMP #1 - SUCTION ISOLATION VALVE

PROCESS AREA - PRIMARY SLUDGE = PSL

PROCESS FUNCTION - SUC

EQUIPMENT DESIGNATOR - VALVE = VLV

SEQUENTIAL NUMBER - ALWAYS 5 DIGITS - VARIES = 14104

DIGIT 1 AND 2 PRIMARY SEDIMENTATION--14
DIGIT 3 UNIT NUMBER--1
DIGIT 4 AND 5 SEQUENCING NUMBER--04

EQUIPMENT DESIGNATIONS

NEW EQUIPMENT

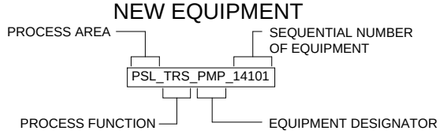

EXISTING EQUIPMENT

PSL_TRS_PMP_14101

FUTURE EQUIPMENT

PSL_TRS_PMP_14101

SECTION AND DETAIL DESIGNATION

(1) SECTION CUT ON DWG M-102-051

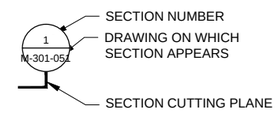

(2) ON DWG M-301-051 THIS SECTION IS IDENTIFIED

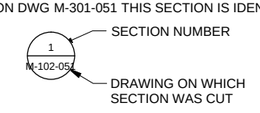

(3) DETAILS ARE CROSS-REFERENCED IN A SIMILAR MANNER. EXCEPT THAT DETAILS ARE IDENTIFIED BY LETTER RATHER THAN BY NUMBER.

Brown AND Caldwell
WALNUT CREEK, CALIFORNIA

SUBMITTED: _____ DATE: _____
PROJECT MANAGER
APPROVED: _____ DATE: _____
BROWN AND CALDWELL

LINE IS 2 INCHES AT FULL SIZE (IF NOT 2" - SCALE ACCORDINGLY)
SCALE: NO SCALE
DESIGNED: ENGINEER
DRAWN: DRAFTER
CHECKED: CHECKED
APPROVED: APPROVED

EXTERNAL REFERENCE FILES
142399-TB-redwood city.dwg
Designation Systems.dwg
Acad Ver. 19.0S (LMS TECH)

PRELIMINARY

THIS DRAWING IS NOT VALID FOR CONSTRUCTION PURPOSES UNLESS IT BEARS THE SEAL AND SIGNATURE OF A DULY REGISTERED PROFESSIONAL

CHARLES W. JOYCE
ENGINEER-IN-RESPONSIBLE CHARGE
C33166
CALIFORNIA REGISTRATION NUMBER

REVISIONS

ZONE	REV.	DESCRIPTION	BY	DATE	APP.

PUMP STATION 2 PRE-DESIGN

SVCW Silicon Valley Clean Water

GENERAL
PUMP STATION 2

DESIGNATION SYSTEMS AND KEY ABBREVIATIONS

FILENAME G-002-052.DWG
BC PROJECT NUMBER 142399
January 13, 2015
DRAWING NUMBER **G-002-052**
SHEET NUMBER 02 OF 67

2x	QUANTITY: 2 OR DOUBLE
A,AMP	AMP(S). AMPERE(S)
AB	ANCHOR BOLT, AGGREGATE BASE
ABS	ABSOLUTE
AC	ASPHALT CONCRETE, ALTERNATING CURRENT, AIR CONDITIONER
A/C	AIR CONDITIONING
ACC	AREA CONTROL CENTER
ACST	ACOUSTIC
ACT	ACTUAL
AD	AREA DRAIN
ADJ	ADJACENT, ADJUSTABLE
ADWF	AVERAGE DRY WEATHER FLOW
AFF	ABOVE FINISHED FLOOR
AHAP	AS HIGH AS POSSIBLE
AIC	AMPS INTERRUPTING CAPACITY
AL	ALUMINUM
ALM	ALARM
ALUM	ALUMINUM SULFATE
ALT	ALTERNATE
AMB	AMBIENT
AMD	AIR MONITORING DEVICE
ANC	ANCHOR
AP	ACCESS PANEL
APPROX	APPROXIMATE(LY)
AR	ALARM RELAY
ARCH	ARCHITECT(URAL)
AS	AIR SUPPLY
ASB	AGGREGATE SUBBASE
ASSY	ASSEMBLY
ASYM	ASYMMETRICAL
ATM	ATMOSPHERE
AUTO	AUTOMATIC
AUX	AUXILIARY
AV	ANGLE VALVE
AW	ABOVE WATER
AWG	AMERICAN WIRE GAUGE
BC	BEGINNING OF CURVE
BCOP	BARE COPPER
BD	BOARD
BDY	BOUNDARY
BEV	BEVEL
BF	BLIND FLANGE, BOTH FACES, BOTTOM FACE
BFV	BUTTERFLY VALVE
BHP	BRAKE HORSEPOWER
BLDG	BUILDING
BLK	BLOCK
BM	BEAM, BENCHMARK
BO	BOTTOM OF
BOD	BIOCHEMICAL OXYGEN DEMAND
BOT	BOTTOM
BRG	BEARING
BS	BOTH SIDES
BSMT	BASEMENT
BTU	BRITISH THERMAL UNIT
BUR	BUILT-UP-ROOF
BV	BALL VALVE
BVC	BEGINNING OF VERTICAL CURVE
BW	BOTH WAYS, BACK OF WALK
C	CONDUCTOR, CONDUIT
CAB	DIRECT BURIAL CABLE
CAP	CAPACITY
CB	CATCH BASIN, CIRCUIT BREAKER
CBU	CEMENTATIOUS BACKER UNIT
CC	CONCRETE CORNER
C-C	CENTER TO CENTER
CCP	CONCRETE CYLINDER PIPE
CCSP	CONCRETE LINED AND COATED STEEL PIPE
CD	CEILING DIFFUSER
CDR	CONDUCTOR
CED	CEILING EXHAUST DIFFUSER
CER	CEILING EXHAUST REGISTER
CET	CERAMIC TILE
CF	CUBIC FEET
CFH	CUBIC FEET PER HOUR
CFM	CUBIC FEET PER MINUTE
CFR	CODE OF FEDERAL REGULATIONS
CFS	CUBIC FEET PER SECOND
CI	CAST IRON
CIP	CAST IRON PIPE , CAST-IN-PLACE
CIRC	CIRCUMFERENCE
CJ	CONSTRUCTION JOINT
CJP	COMPLETE JOINT PENETRATION
CKPL	CHECKER PLATE
CKT	CIRCUIT
CL	CLEARANCE, CHAIN LINK
CLG	CEILING
CLF	CHAIN LINK FENCE
CLR	CLEAR
CL2	CHLORINE
CM	MANUAL CONTROL STATION, CENTIMETERS
CMA	MANUAL-AUTO CONTROL STATION
CMC	CEMENT MORTAR COATED
CMCL	CEMENT MORTAR COATED AND LINED
CML	CEMENT MORTAR LINED
CMP	CORRUGATED METAL PIPE
CMP-AC	CORRUGATED METAL PIPE ASPHALT COATED
CMU	CONCRETE MASONRY UNIT
CND	CONDUIT
CNT	CENTER
CNTL	CONTROL
CO	CLEANOUT
CO2	CARBON DIOXIDE
COAX	COAXIAL
COD	CHEMICAL OXYGEN DEMAND
COL	COLUMN
COMB	COMBUSTIBLE GAS
CONC	CONCRETE, CONCENTRIC, CONCENTRATION
COND	CONDUCTIVITY, CONDUCTOR, CONDENSATE
CONN	CONNECTION
CONT	CONTINUE(D)(OUS)
COORD	COORDINATE(ION)
COR	CORNER
COV	COVER
CPLG	COUPLING
CPT	CARPET
CPVC	CHLORINATED POLYVINYL CHLORIDE
CR	CONTROL RELAY
CREJ	CORRUGATED RUBBER EXPANSION JOINT
CSD	CEILING SUPPLY DIFFUSER
CT	CURRENT TRANSFORMER
CTR	CONTRACTOR, CENTER
CU	CONTROL UNIT, COPPER, CUBIC
d	PENNY
DAFT	DISSOLVED AIR FLOTATION THICKENER
DB	DUCT BANK, DIRECT BURIAL, DECIBEL
DBL	DOUBLE
DC	DIRECT CURRENT
DET	DETAIL
DEMO	DEMOLITION
DF	DRINKING FOUNTAIN
DFD	DUCT FIRE DAMPER
DG	DOOR GRILLE
DIA	DIAMETER
DIAG	DIAGRAM
DIG	DIGESTER
DIFF	DIFFERENTIAL
DIM	DIMENSION
DIP	DUCTILE IRON PIPE
DLD	DEDICATED LAND DISPOSAL
DM	DAMPER MOTOR
DMH	DROP MANHOLE
DN	DOWN
DO	DISSOLVED OXYGEN, DIESEL OIL
DR	DRAIN ROCK, DOOR
DRN	DRAIN
DT	DRAIN TRAP, DRIP TRAP
DW	DRIVEWAY
DWG	DRAWING
DWL(S)	DOWEL(S)
DX	DUPLEX
EA	EXHAUST AIR, EACH
EAT	ENTERING AIR TEMPERATURE
EAU	ENGINE ALTERNATOR UNIT
EC	END OF CURVE
ECC	ECCENTRIC
ED	EXTRACTOR DAMPER
EE	EACH END
EF	EACH FACE
EFF	EFFLUENT
EJ	EXPANSION JOINT
EL	ELEVATION
ELEC	ELECTRIC(AL)
ELL	ELBOW
EMBD	EMBEDDED
EMER	EMERGENCY
EMT	ELECTRICAL METALLIC TUBING
ENCL	ENCLOSURE, ENCLOSED
EP	EDGE OF PAVEMENT
EPWWF	EQUALIZED PEAK WET WEATHER FLOW
EQ	EQUAL
EQUIP	EQUIPMENT
ES	EXISTING SURFACE
ESC	ESCAPE
EVC	END OF VERTICAL CURVE
EW	EACH WAY
EWT	ENTERING WATER TEMPERATURE
EX	EXTRA
EXG	EXHAUST GRILLE
EXIST	EXISTING
EXP	EXPANSION
EXT	EXTERIOR
F	FAHRENHEIT, FACE, FUSE(D)
FAB	FABRICATE(D)(TION)
FACT	FACTORY FINISH
FAI	FRESH AIR INTAKE
FB	FLAT BAR, FLOOR BEAM
FC	FAIL CLOSED
FCO	FLOOR CLEANOUT
FCR	FINE CRUSHED ROCK
FD	FLOOR DRAIN, FIRE DAMPER
FDN	FOUNDATION
FDR	FEEDER
FEC	FIRE EXTINGUISHER CABINET
FF	FAR FACE, FINISH FLOOR
F-F	FACE TO FACE
FG	FLAP GATE, FINISH GRADE
FH	FIRE HYDRANT
FHD	FLATHEAD
FIN	FINISHED, FINISH
FL	FLOW LINE
FLA	FULL LOAD AMPS
FLEX	FLEXIBLE
FLG	FLANGE(D)
FLP	FLUID POWER UNIT, FAILED LAST POSITION
FLR	FLOOR
FM	FORCE MAIN
FMH	FLEXIBLE METAL HOSE
FO	FAIL OPEN, FACE OF
FOR	FUEL OIL RETURN
FOS	FUEL OIL SUPPLY
FOV	FUEL OIL VALVE
FPC	FLEXIBLE PIPE COUPLING
FPC-T	FLEXIBLE PIPE COUPLING TO TAKE TENSION
FPM	FEET PER MINUTE
FPS	FEET PER SECOND
FR	FIRE RATING
FRP	FIBERGLASS REINFORCED PLASTIC
FS	FLOW SWITCH, FAR SIDE
FSH	FLOW SWITCH HIGH
FSL	FACULTATIVE SLUDGE LAGOON, FLOW SWITCH LOW
FT	FEET, FUME TIGHT
FTG	FOOTING
FTGS	FITTINGS
FUT	FUTURE
FZT	FREEZESTAT
GA	GAGE
GAL	GALLON (S)
GALV	GALVANIZED
GB	GRADE BREAK
GBV	GLOBE VALVE
GD	GUARD
GDR	GROUNDING RESISTOR
GEN	GENERAL
GF	GROUND FAULT
GFI	GROUND FAULT INTERRUPTER
GL	GLASS
GPD	GALLONS PER DAY
GPM	GALLONS PER MINUTE
GR	GRADE
GRD	GROUND
GRT	GROUT
GRTG	GRATING
GSKT	GASKET
GSP	GALVANIZED STEEL PLATE
GV	GATE VALVE
GYP	GYPSUM
H	HIGH
H2S	HYDROGEN SULFIDE
HA	HAND-AUTO SELECTION
HB	HOSE BIB
HD	HEAVY DUTY
HDOT	HEAVY DUTY OIL TIGHT
HDR	HEADER
HDWR	HARDWARE
HGT	HEIGHT
HH	HANDHOLE
HID	HIGH INTENSITY DISCHARGE
HM	HOLLOW METAL
HOA	HAND-OFF-AUTO
HOR	HORIZONTAL
HP	HIGH PRESSURE, HIGH POINT, HORSEPOWER
HR	HANDRAIL, HEAT RESERVOIR, HOUR
HTV	HIGH TEMPERATURE VENT
HV	HOSE VALVE, HEATING AND VENTILATING UNIT, HIGH VOLTAGE
HVAC	HEATING, VENTILATING AND AIR CONDITIONING
HW	HOT WATER
HWTR	HIGH WATER
HYD	HYDRAULIC
HYDT	HYDRANT
HZ	HERTZ (CYCLES PER SECOND)
I	INTEGRAL CONTROL
ID	INSIDE DIAMETER
IF	INSIDE FACE
IL	INDICATING LAMP
IMC	INDIVIDUAL MOTOR CONTROLLER, INTERMEDIATE METAL CONDUIT
IN	INCH
IND	INDICATE
INF	INFLUENT
INS	INSULATE(D)(ION)
INST	INSTANTANEOUS
INSTR	INSTRUMENTATION, INTERNAL, INTERSECT
INT	INTERIOR
INTER	INTERMEDIATE
INTLK	INTERLOCK
INV	INVERT
I/O	INPUT-OUTPUT
IT	INSTRUMENT TAP
JB	JUNCTION BOX
JOA	JOG-OFF-AUTO SELECTION
JST	JOIST
JT	JOINT
K	KIP (1000 POUNDS)
KGMIL	1000 CIRCULAR MIL
KO	KNOCK OUT
KV	KILOVOLT
KVA	KILOVOLT-AMPERE
KVAR	KILOVOLT-AMPERE REACTIVE
KW	KILOWATT
KWH	KILOWATT-HOUR
KWY	KEYWAY
L	LENGTH, LONG
LAM	LAMINATED
LAT	LEAVING AIR TEMPERATURE, LATERAL, LATITUDE
LAV	LAVATORY
LB	POUND
LEV	LEVEL
LG	LONG
LGMT	LIGHT GAGE METAL TRUSS
LL	LEAD-LAG SELECTION
LLV	LONG LEG VERTICAL
LOS	LOCKOUT STOP
LP	LOW PRESSURE, LIGHTING PANEL, LOW POINT
LS	LEVEL SWITCH
LSH	LEVEL SWITCH HIGH
LSL	LEVEL SWITCH LOW
LT	LONG TIME, LEFT
LTG	LIGHTING
LV	LOW VOLTAGE
LWR	LOWER
M	METER
MA	MILLIAMPERE
MAN	MANUAL(LY)
MAX	MAXIMUM
MB	MACHINE BOLT OR BORE
MBH	THOUSAND BTU'S PER HOUR
MCC	MOTOR CONTROL CENTER
MCM	THOUSAND CIRCULAR MILLS
MATL	MATERIAL
MCP	MOTOR CIRCUIT PROTECTOR
MD	MOTORIZED DAMPER
MECH	MECHANICAL
MFR	MANUFACTURE(R)
MG	MILLION GALLONS
MGD	MILLION GALLONS PER DAY
MG/L	MILLIGRAMS PER LITER
MH	MANHOLE
MIC	MICROPHONE
MIL	MILLION
MILSPEC	MILITARY SPECIFICATION
MIN	MINIMUM, MINUTE
MISC	MISCELLANEOUS
MJ	MECHANICAL JOINT
ML	MILLILITER, MIXED LIQUOR
MM	MILLIMETER
MTD, MTG	MOUNTED, MOUNTING
MTL	METAL
MTR, M	MOTOR
MUL/DIV	MULTIPLY/DIVIDE
MV	MUD VALVE, MILLIVOLT, MEDIUM VOLTAGE
N	NEUTRAL, NORTH
NA	NONAUTOMATIC
N/A	NOT APPLICABLE
NAOH	SODIUM HYDROXIDE
NC	NORMALLY CLOSED
ND	NAPKIN DISPOSAL
NEG	NEGATIVE
NEUT	NEUTRAL
NIC	NOT IN CONTRACT
NO	NORMALLY OPEN, NUMBER
NOM	NOMINAL
NOX	NITRATES AND NITRITES
NP	NAME PLATE
NPSH	NET POSITIVE SUCTION HEAD
NR	NOT RATED
NRS	NONRISING STEM
NS	NEAR SIDE
NTS	NOT TO SCALE
NV	NAPKIN VENDER
OA	OUTSIDE AIR, OVERALL, OPEN-AUTO
OAI	OUTSIDE AIR INTAKE
OC	ON CENTER
OCA	OPEN-CLOSE-AUTO
OCT	OCTAGON
OD	OUTSIDE DIAMETER
OF	OUTSIDE FACE
OH	OVERHEAD
OHD	OVERHEAD DOOR
OL	OVERLOAD
OO	ON-OFF
OPNG	OPENING
OPP	OPPOSITE
ORP	OXIDATION REDUCTION POTENTIAL
OS	OUTSIDE
OSA	OUTSIDE AIR
OT	OIL TIGHT
P	PHASE, PROCESS, POLE, PAINT
PAR	PARALLEL
PB	PUSH-BUTTON, PULL BOX
PC	PLAIN CONCRETE, PIPE COUPLING
PCC	PLANT CONTROL CENTER
PCHV	PINCH VALVE
PCP	PLAIN CONCRETE PIPE
PC-T	PIPE COUPLING TO TAKE TENSION
PCU	PHOTOELECTRIC CONTROL UNIT
PE	PNEUMATIC/ELECTRICAL CONVERTER
PF	POWER FACTOR, PRESSURIZED FLOW
PG	PRESSURE GAGE
pH	POWER FUNCTION OF HYDROGEN ION CONSTRUCTION
PH	PHASE
P&ID	PROCESS AND INSTRUMENTATION DIAGRAM
PI	PRESSURE INDICATOR, POINT OF INTERSECTION
PJP	PARTIAL JOINT PENETRATION
PIVC	POINT OF INTERSECTION ON VERTICAL CURVE
PL	PROPERTY LINE, PIPELINE, PLATE
PLAM	PLASTIC LAMINATE
PLAS	PLASTER
PLC	PROGRAMMABLE LOGIC CONTROLLER
PLYWD	PLYWOOD
PNL	PANEL, PANELBOARD
POC	POINT OF CURVE
PP	POWER POLE
PR	PAIR
PRE-FAB	PRE-FABRICATED
PRE-FIN	PRE-FINISHED
PRES	PRESSURE
PRD	PRESSURE RELIEF DAMPER
PRI	PRIMARY
PRV	PRESSURE REGULATING (REDUCING) VALVE, PRESSURE RELIEF VALVE
PRS	PRESSURE REDUCING STATION
PS	PRESSURE SWITCH, PRESSURE SENSOR
PSF	POUNDS PER SQUARE FOOT
PSH	PRESSURE SWITCH HIGH
PSIA	POUNDS PER SQUARE INCH ABSOLUTE
PSIG	POUNDS PER SQUARE INCH GAGE
PSL	PIPE SLEEVE, PRESSURE SWITCH LOW
PT	POTENTIAL TRANSF., POINT, PRESS. TREATED
PV	PLUG VALVE, PROCESS VARIABLE
PVC	POLYVINYL CHLORIDE
PVL	PRESSURE VESSEL
PVT	PAVEMENT
PWR	POWER
Q	RATE OF FLOW
QCPLG	QUICK COUPLING
R	RADIUS, RISER
RB	RUBBER BASE
RBT	RUBBER TILE
R/C	REINFORCED CONCRETE
RA	RETURN AIR
RAF	ROLL TYPE AIR FILTER
RCDR	RECORDER
RCP	REINFORCED CONCRETE PIPE
RCPT	RECEPTACLE
RD	ROOF DRAIN
RDWY	ROADWAY
RECD	RECEIVED
RED	REDUCE(R)
REF	REFERENCE, REFRIGERATOR
REG	REGULATOR
REINF	REINFORCE, REINFORCING
REL	RELAY
REM	REMOVE, REMOVABLE
REQ'D	REQUIRED
RES	RESIDUAL CHLORINE
RGS	RIGID GALVANIZED STEEL
RM	ROOM
RMS	ROOT MEAN SQUARE
RO	ROUGH OPENING
RPM	REVOLUTIONS PER MINUTE
RR	RAILROAD
RT	RIGHT
RTD	RESISTANCE TEMPERATURE DETECTOR
RTP	REINFORCED THERMOSET POLYESTER
RTU	REMOTE TERMINAL UNIT
RL	REDUCED LEVEL
RWL	RAINWATER LEADER
RWP	RAINWATER PIPE
S	SOUTH
SA	SUPPLY AIR, SERVICE AIR
SAT	SUSPENDED ACOUSTICAL TILE
SB	SIGNAL BOX
SC	SOLID CORE
SCD	SCUPPER DRAIN
SCFM	STANDARD CUBIC FEET PER MINUTE
SCH	SCHEDULE
SCR	SILICON CONTROLLED RECTIFIER
SD	SPLITTER DAMPER, SMOKE DETECTOR
SDWK	SIDEWALK
SEC	SECONDARY
SECT	SECTION
SEL	SELECTOR
SG	SUPPLY GRILLE, SLUICE GATE
SHT	SHEET
SI	SPEED INCREASER
SIM	SIMILAR
SL	SLOPE
SMS	SHEET METAL SCREW
SP	SPACE, SET POINT, STATIC PRESSURE, STOP
SPEC	SPECIFICATION(S)
SPG	SPACING
SPKR	SPEAKER
SOL	SOLENOID
SO2	SULFUR DIOXIDE
SPL	SPLICE
SQ FT	SQUARE FEET
SR	SPEED REDUCER
SRV	SAFETY RELIEF VALVE
SS	STAINLESS STEEL, START-STOP, SANITARY SEWER
SSFH	STAINLESS STEEL FLAT HEAD
SSK	SERVICE SINK
ST	START, SHORT TIME
STA	STATION
STD	STANDARD, STORM DRAIN
STIFF	STIFFENER
STR	SURGE TANK RECIRCULATION
STL	STEEL
STRUCT	STRUCTURE
SUB	SUBSTITUTE, SUBSTATION
SUPT	SUPPORT
STRUCT	STRUCTURE
SUB	SUBSTITUTE, SUBSTATION
SUPT	SUPPORT
SURF	SURFACE
SUSP	SUSPENDED
SV	SHEET VINYL
SW	SWITCH, SIDEWALK
SYM	SYMMETRICAL
SYS	SYSTEM
T	TRAP
T&B	TOP AND BOTTOM
TB	TERMINAL BOX
TBD	TO BE DETERMINED
T/B	TOP OF BANK
TC	TOP OF CURB
TCL	TOTALLY CLOSED
TCL2	TOTAL CHLORINE
TCP	TEMPERATURE CONTROL PANEL
TD	TIME DELAY RELAY, TANK DRAIN, TEMPERATURE DIFFERENCE
TE	TOTALLY ENCLOSED
TEL	TELEPHONE
TEMP	TEMPERATURE
TI	TEMPERATURE INDICATOR
TO	TOP OF
TOA	TEST-OFF-AUTO
TOC	TOP OF CONCRETE
TOP	TOP OF PIPE
TOS	TOP OF STEEL
TP	TANGENT POINT
TPD	TOILET PAPER DISPENSER
TPG	TOPPING
TPLX	TRIPLEXED
TR	STAIR TREAD
TRM	TRANSMITTER
TRN	TRANSDUCER
TS	TEMPERATURE SWITCH, TOTAL SOLIDS
TSH	TEMPERATURE SWITCH HIGH
TSL	TEMPERATURE SWITCH LOW
TST	THERMOSTAT
TURB	TURBIDITY
TV	THERMOSTATIC VALVE, TELEVISION
TW	TOP OF WALL
TYP	TYPICAL
UB	UTILITY BOX
UH	UNIT HEADER
UL	ULTIMATE LOAD
UN	UNION
UG,U/G	UNDER GROUND
UP	UTILITY POLE
US	UTILITY STATION
USS	UNIT SUBSTATION
V	VALVE, VOLT(S), VENT
VA	VOLT-AMPERE
VAC	VOLTS ALTERNATING CURRENT
VAR	VARIES, VARIABLE, VOLT-AMPERE REACTIVE
VB	VALVE BOX
VC	VERTICAL CURVE
VCP	VITRIFIED CLAY PIPE
VCT	VINYL COMPOSITION TILE
VD	VOLUME DAMPER
VDC	VOLTS DIRECT CURRENT
VERT	VERTICAL
VP	VAPOR PRESSURE
VS	VOLATILE SOLIDS
VTR	VENT THROUGH ROOF
W	WATT, WIRE, WIDE
W/	WITH
WDW	WINDOW
WC	WATER CLOSET, WATER COLUMN
WCO	WALL CLEANOUT
WD	WOOD
WEG	WALL EXHAUST GRILLE
WER	WALL EXHAUST REGISTER
WF	WIDE FLANGE
WI	WROUGHT IRON
WO	WHERE OCCURS
W/O	WITHOUT
WP	WEATHERPROOF
WPJ	WEAKENED PLANE JOINT
WR	WATER RESISTANT
WS	WATER SURFACE
WSR	WALL SUPPLY REGISTER
WSTP	WATERSTOP
WT	WATERTIGHT
WWF	WELDED WIRE FABRIC
X	SPARE CONDUIT
XLP	CROSS LINKED POLYETHYLENE
XP	EXPLOSION PROOF
YCO	YARD CLEANOUT
Z	IMPEDANCE
ZS	POSITION SWITCH, (LIMIT) SWITCH

NOTES:
1. SEE DRAWING G-002-051 FOR EQUIPMENT NUMBER PREFIXES.
2. ADDITIONAL ABBREVIATIONS ARE DEFINED IN ANSI Y1.1-1972.
3. STANDARD ABBREVIATIONS ARE FOR REFERENCE ONLY. NOT ALL ABBREVIATIONS ARE USED IN THESE CONTRACT DRAWINGS.

Brown AND Caldwell
WALNUT CREEK, CALIFORNIA

SUBMITTED: _____ DATE: _____
PROJECT MANAGER
APPROVED: _____ DATE: _____
BROWN AND CALDWELL

LINE IS 2 INCHES AT FULL SIZE (IF NOT 2" - SCALE ACCORDINGLY)
SCALE: NO SCALE
DESIGNED: ENGINEER
DRAWN: DRAFTER
CHECKED: CHECKED
APPROVED: APPROVED

EXTERNAL REFERENCE FILES
142399-TB-redwood city.dwg
Abbreviations.dwg

PRELIMINARY

THIS DRAWING IS NOT VALID FOR CONSTRUCTION PURPOSES UNLESS IT BEARS THE SEAL AND SIGNATURE OF A DULY REGISTERED PROFESSIONAL

CHARLES W. JOYCE
ENGINEER-IN-RESPONSIBLE CHARGE
C33166
CALIFORNIA REGISTRATION NUMBER

REVISIONS

ZONE	REV.	DESCRIPTION	BY	DATE	APP.

PUMP STATION 2 PRE-DESIGN

SVCW Silicon Valley Clean Water

GENERAL
PUMP STATION 2

ABBREVIATIONS

FILENAME G-003-052.DWG
BC PROJECT NUMBER 142399
January 13, 2015
DRAWING NUMBER **G-003-052**
SHEET NUMBER 03 OF 67

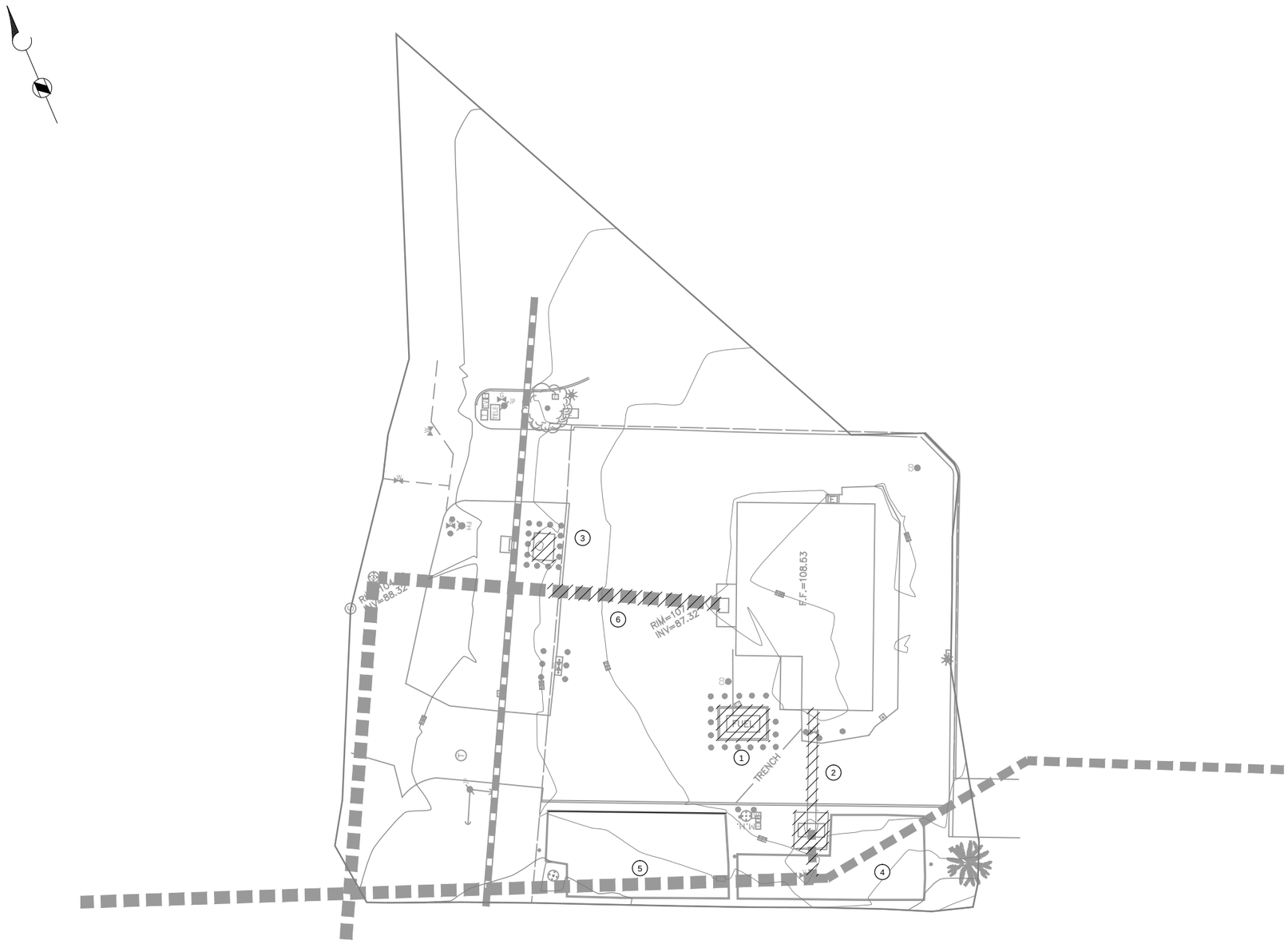

PUMP STATION 2

PLAN

KEY NOTES:

1. REMOVE AND DISPOSE OF FUEL TANK.
2. REMOVE AND DISPOSE OF 30" FM AND FLOWMETER PIT TO EXTENTS NECESSARY. PLUG PIPE AT END.
3. REMOVE AND DISPOSE OF TRANSFORMER.
4. ABANDON EXISTING 33" WS FM IN PLACE.
5. ABANDON EXISTING 42" WS FM IN PLACE.
6. REMOVE AND DISPOSE OF EXISTING 48" RCP TO EXTENTS NECESSARY. PLUG PIPE AT BOTH ENDS.

Brown AND Caldwell

WALNUT CREEK, CALIFORNIA

SUBMITTED: _____ DATE: _____
PROJECT MANAGER

APPROVED: _____ DATE: _____
BROWN AND CALDWELL

LINE IS 2 INCHES AT FULL SIZE (IF NOT 2" - SCALE ACCORDINGLY)

SCALE: 1"=20'

DESIGNED: ENGINEER
DRAWN: DRAFTER
CHECKED: CHECKED
APPROVED: APPROVED

EXTERNAL REFERENCE FILES
142399-MF-02-Redwood City-Topo.dwg
142399-TB-redwood city.dwg

PRELIMINARY

THIS DRAWING IS NOT VALID FOR CONSTRUCTION PURPOSES UNLESS IT BEARS THE SEAL AND SIGNATURE OF A DULY REGISTERED PROFESSIONAL

CHARLES W. JOYCE
ENGINEER-IN-RESPONSIBLE CHARGE
C33166
CALIFORNIA REGISTRATION NUMBER

REVISIONS

ZONE	REV.	DESCRIPTION	BY	DATE	APP.

PUMP STATION 2 PRE-DESIGN

SVCW Silicon Valley Clean Water

CIVIL

PUMP STATION 2

DEMOLITION PLAN

FILENAME CD-101-052.DWG
BC PROJECT NUMBER 142399
January 13, 2015
DRAWING NUMBER **CD-101-052**
SHEET NUMBER 04 OF 67

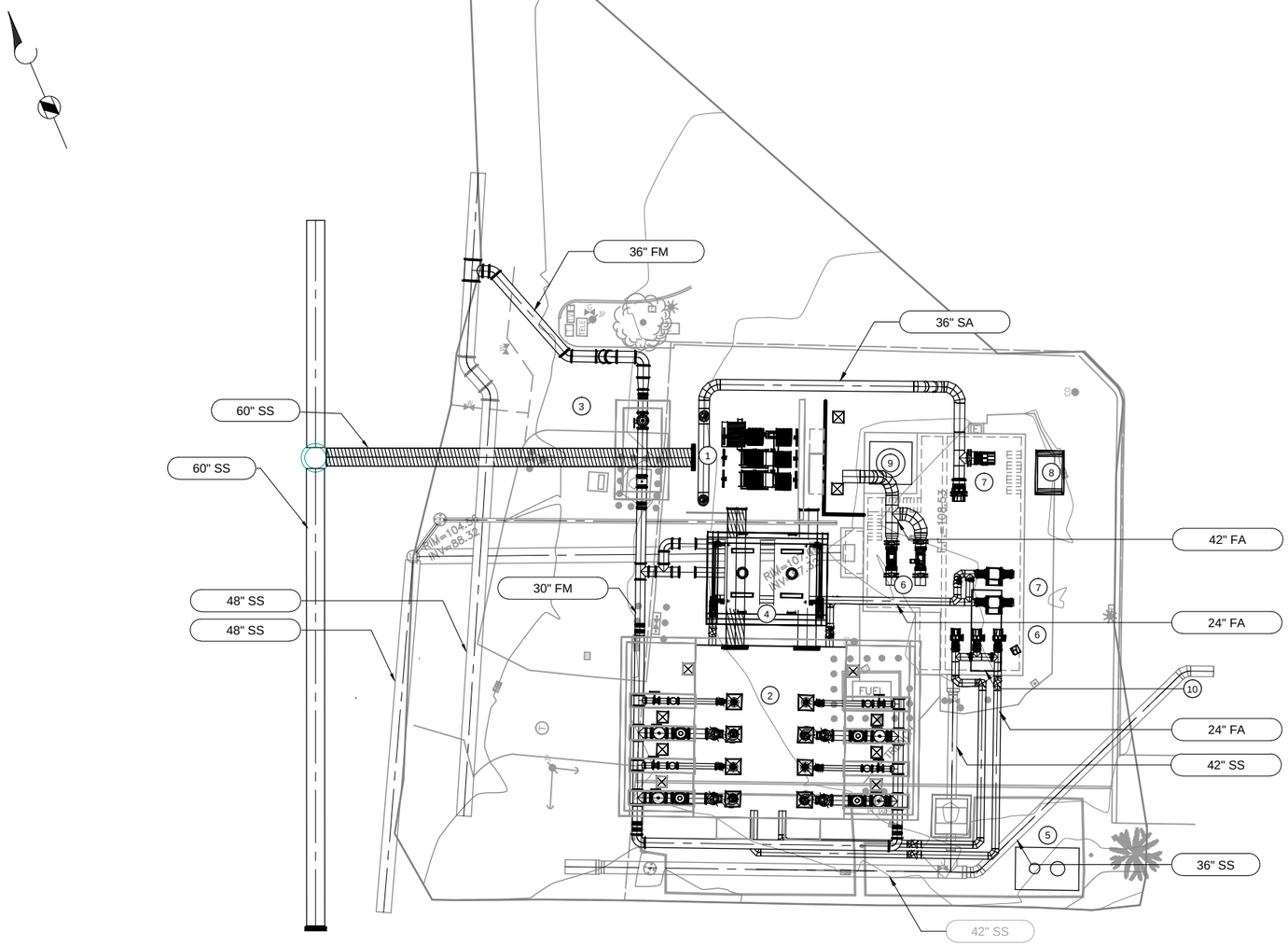

PUMP STATION 2
PLAN

	STRUCTURE NAME	STRUCTURAL PLAN	STRUCTURAL SECTION	MECHANICAL PLAN	MECHANICAL SECTION
1	INFLUENT SCREENS	S-101-052	S-302-052	M-101-052	M-301-052
2	WET WELLS AND VALVE VAULTS	S-104-052	S-303-052	M-102-052	M-302-052
3	EFFLUENT FLOW METER VAULT	S-107-052	S-107-052	M-101-052	M-301-052
4	SURGE CONTROL	S-107-052	S-107-052	M-103-052	M-304-052
5	CHEMICAL STORAGE				
6	EXHAUST FANS			MH-101-052	
7	SUPPLY FANS			MH-101-052	
8	FUEL TANK				
9	CHEMICAL SCRUBBER			MH-101-052	
10	GENERATOR			MH-101-052	

Brown AND Caldwell
WALNUT CREEK, CALIFORNIA

SUBMITTED: _____ DATE: _____
PROJECT MANAGER
APPROVED: _____ DATE: _____
BROWN AND CALDWELL

LINE IS 2 INCHES
AT FULL SIZE
(IF NOT 2" - SCALE ACCORDINGLY)

SCALE: 1"=20'
DESIGNED: ENGINEER
DRAWN: DRAFTER
CHECKED: CHECKED
APPROVED: APPROVED

EXTERNAL REFERENCE FILES
142399-MF-02-Redwood City-Topo.dwg
142399-MF-02-Redwood City-Mechanical.dwg
142399-TB-redwood city.dwg
142399-MF-02RC-S-NPS-LVL3-3D.dwg
142399-MF-02RC-S-SCRN-LVL2-3D.dwg
142399-MF-02RC-S-SCRN-LVL1-3D.dwg

PRELIMINARY

THIS DRAWING IS NOT VALID FOR CONSTRUCTION PURPOSES UNLESS IT BEARS THE SEAL AND SIGNATURE OF A DULY REGISTERED PROFESSIONAL

CHARLES W. JOYCE
ENGINEER-IN-RESPONSIBLE CHARGE
C33166
CALIFORNIA REGISTRATION NUMBER

REVISIONS

ZONE	REV.	DESCRIPTION	BY	DATE	APP.

PUMP STATION 2 PRE-DESIGN

SVCW
Silicon Valley Clean Water

CIVIL
PUMP STATION 2

PLAN

FILENAME
C-101-052.DWG
BC PROJECT NUMBER
142399
January 13, 2015
DRAWING NUMBER
C-101-052
SHEET NUMBER
05 OF 67

GENERAL

G 1 SCOPE
THE GENERAL NOTES AND TYPICAL DETAILS ARE GENERAL AND APPLY TO THE ENTIRE PROJECT EXCEPT WHERE THERE ARE SPECIFIC INDICATIONS TO THE CONTRARY.

EDG 2 PRECEDENCE
IF THERE IS A CONFLICT BETWEEN PROJECT SPECIFICATIONS AND STRUCTURAL DRAWINGS, INCLUDING STRUCTURAL NOTES, CONTACT THE STRUCTURAL ENGINEER OF RECORD FOR CLARIFICATION. SPECIFIC NOTES AND DETAILS ON DRAWINGS TAKE PRECEDENCE OVER GENERAL NOTES AND TYPICAL DETAILS.

G 3 DIMENSIONS
STRUCTURAL DIMENSIONS CONTROLLED BY OR RELATED TO THE MECHANICAL OR ELECTRICAL EQUIPMENT SHALL BE VERIFIED BY THE CONTRACTOR PRIOR TO CONSTRUCTION. CONTRACTOR IS RESPONSIBLE FOR COORDINATING ALL CONSTRUCTION DIMENSIONS AND NOTIFYING CONSTRUCTION MANAGER OF DISCREPANCIES IN A TIMELY FASHION.

G 4 PROVISIONS FOR EQUIPMENT
MECHANICAL AND ELECTRICAL EQUIPMENT SUPPORTS, ANCHORAGES, OPENINGS, RECESSES AND EMBEDMENTS NOT SPECIFIED ON THE STRUCTURAL DRAWINGS, BUT SPECIFIED ON OTHER CONTRACT DRAWINGS, SHALL BE PROVIDED PRIOR TO CASTING CONCRETE.

G 5 MEANS, METHODS & CONSTRUCTION LOADS
CONTRACT DRAWINGS AND SPECIFICATIONS REPRESENT THE FINISHED STRUCTURE. CONTRACTOR IS RESPONSIBLE FOR MEANS, METHODS AND SEQUENCE OF CONSTRUCTION, AND SHALL MAKE ADEQUATE PROVISION TO MAINTAIN THE INTEGRITY OF ALL STRUCTURES AT ALL STAGES OF CONSTRUCTION. DETERMINATION OF AND PROVISIONS FOR CONSTRUCTION LOADING SHALL BE PROVIDED BY THE CONTRACTOR.

G 6 SAFETY
CONTRACTOR SHALL TAKE ADEQUATE PRECAUTIONS TO ENSURE THE SAFETY OF WORKERS AND VISITORS TO THE SITE, INCLUDING BUT NOT LIMITED TO SHORING, BRACING AND ACCESS RESTRICTION. COMPLY WITH ALL FEDERAL, STATE AND LOCAL SAFETY CODES AND STANDARDS.

G 7 DRAINAGE SURFACES
SLOPE DRAINAGE SURFACES UNIFORMLY TO DRAIN. SLOPE SHALL BE 1/8" TO 1/4" PER FOOT EXCEPT WHERE NOTED OTHERWISE ON THE PLANS.

G 8 OPENINGS
OPENINGS THROUGH NEW AND EXISTING WALLS AND SLABS FOR PIPES, DUCTS, CONDUITS, ETC., ARE NOT ALL SHOWN ON THE STRUCTURAL DRAWINGS. THE CONTRACTOR SHALL COORDINATE WITH OTHER DISCIPLINES AND PROVIDE THESE OPENINGS IN ACCORDANCE WITH THE OTHER CONTRACT DOCUMENTS.

DESIGN CRITERIA

DC1 GOVERNING BUILDING CODE
CONSTRUCTION SHALL BE IN ACCORDANCE WITH 2013 CALIFORNIA BUILDING CODE. THIS CODE SHALL GOVERN EXCEPT WHERE OTHER APPLICABLE CODES OR CONTRACT PROVISIONS ARE MORE RESTRICTIVE.

DC2 LIVE LOADS
ROOF ..... 50 PSF

DC3 WIND
BASIC WIND SPEED ..... 85 MPH
EXPOSURE CATEGORY C
IMPORTANCE FACTOR ..... I = 1.15
TOPOGRAPHIC FACTOR ..... K_{ZT}= 1.0

DESIGN CRITERIA (continued)

DC4 SEISMIC
MCE ACCELERATION, SHORT PERIOD ..... S_S = 1.50 g
MCE ACCELERATION, 1-SEC PERIOD ..... S_1 = 0.652 g
SITE CLASS ..... D
DESIGN ACCEL, SHORT PERIOD ..... S_{DS} = 1.00 g
DESIGN ACCEL, 1-SEC PERIOD ..... S_{D1} = 0.652 g
STRUCTURAL OCCUPANCY CATEGORY III
SEISMIC IMPORTANCE FACTOR ..... I = 1.5 I_P = 1.00,
EXCEPT FOR FIRE PROTECTION SYSTEM, EGRESS STAIRWAYS, AND COMPONENTS CONTAINING HAZARDOUS MATERIALS ..... I_P = 1.50
SEISMIC DESIGN CATEGORY ..... D
BEARING SPECIAL REINFORCED MASONRY
SHEAR WALLS (ASCE 7-10, TABLE 12.2-1) ..... R = 5 Ω_o = 2.5
BEARING SPECIAL REINFORCED
CONCRETE SHEAR WALLS ..... R = 5 Ω_o = 2.5
BASINS AND VAULTS:
GROUND SUPPORTED REINFORCED CONCRETE TANKS
WITH NON-SLIDING BASE (ASCE 7-05, TABLE 15.4-2) ..... R = 2 Ω_o = 2
OPERATIONS BUILDING AND EQUIPMENT BUILDING
(PRE-ENGINEERED METAL BUILDINGS):
ORDINARY STEEL MOMENT FRAMES ..... R = 3.5 Ω_o = 3
ORDINARY STEEL CONCENTRICALLY
BRACED FRAMES ..... R = 3.25 Ω_o = 2
ANALYSIS PROCEDURE: EQUIVALENT LATERAL FORCE
EXCEPT AT LIQUID CONTAINING BASINS ANALYSIS
BASED ON ACI 350.3-06 ..... R_i = 2 R_c = 1

CONCRETE

C 1 APPLICABLE CODES
CONCRETE CONSTRUCTION SHALL CONFORM TO THE LATEST EDITIONS OF ACI-301, "SPECIFICATIONS FOR STRUCTURAL CONCRETE", ACI 318 "BUILDING CODE REQUIREMENTS FOR STRUCTURAL CONCRETE", AND ACI 350 " CODE REQUIREMENTS FROM ENVIRONMENTAL ENGINEERING CONCRETE STRUCTURES AND COMMENTARY".

C 2 REINFORCING STEEL DETAILS
ALL DETAILING, FABRICATION AND ERECTION OF REINFORCING BARS, UNLESS OTHERWISE NOTED, SHALL BE IN ACCORDANCE WITH ACI DETAILING MANUAL (ACI SP-66), LATEST EDITION.

C 3 DESIGN STRENGTH
1. STRUCTURAL CAST-IN-PLACE CONCRETE..... f'c = 4,500 PSI
2. PRECAST CONCRETE.....f'c = 5,000 PSI
3. REINFORCED STEEL ..... ASTM A615, GRADE 60 DEFORMED BARS UNLESS OTHERWISE NOTED

C 4 CONCRETE COVER
CONCRETE COVER FOR REINFORCING BARS SHALL CONFORM TO ACI 350 AND AS FOLLOWS WITH MINIMUM COVER OF ONE BAR DIAMETER:
1. CONCRETE CAST AGAINST EARTH ..... 3"
2. CONCRETE EXPOSED TO EARTH, WASTEWATER, CHEMICALS OR WEATHER ..... 2"
3. CONCRETE WALL AND SLAB NOT EXPOSED TO EARTH, WASTEWATER, CHEMICALS OR WEATHER ..... 3/4"
4. CONCRETE BEAMS AND COLUMNS.....1 1/2"

C 5 BAR DEVELOPMENT AND LAP SPLICE LENGTH
ALL DEVELOPMENT AND SPLICE LENGTHS SHALL BE PER ACI 318-08. TABLE BELOW PROVIDES MINIMUMS BASED ON f'c=4,000 PSI, fy=60,000 PSI, CLEAR SPACING GREATER OR EQUAL TO 3 BAR DIAMETER, MINIMUM COVER PER NOTE C 4, CLASS B SPLICE UNCOATED:

BAR SIZE	DEVELOPMENT LENGTH		SPLICE LENGTH	
	TOP BARS	OTHER	TOP BARS	OTHER
#3 - #6	50 BAR DIA	38 BAR DIA	65 BAR DIA	50 BAR DIA
#7	4'-6"	3'-6"	5'-11"	4'-6"
#8	5'-2"	4'-0"	6'-9"	5'-2"
#9	5'-10"	4'-6"	7'-7"	5'-10"
#10	6'-7"	5'-1"	8'-6"	6'-7"
#11	7'-3"	5'-7"	9'-6"	7'-3"

C 6 WELDING REINFORCING BARS
ALL REINFORCING TO BE WELDED SHALL CONFORM TO ASTM A706. REBAR WELDING SHALL BE IN ACCORDANCE WITH AWS D1.4.

CONCRETE (continued)

C 6 WELDING REINFORCING BARS
ALL REINFORCING TO BE WELDED SHALL CONFORM TO ASTM A706. REBAR WELDING SHALL BE IN ACCORDANCE WITH AWS D1.4.

C 7 STANDARD HOOKS
BARS ENDING IN RIGHT ANGLE BENDS OR HOOKS SHALL CONFORM TO THE REQUIREMENTS OF PARAGRAPH 7.1 ACI-318. PROVIDE STANDARD HOOK IN BARS WHICH TERMINATE AT WALL OR SLAB INTERSECTIONS THAT PROVIDE LESS THAN THE SPECIFIED DEVELOPMENT LENGTH.

C 8 CHAMFERS
EXCEPT AS OTHERWISE REQUIRED, EXPOSED CONCRETE CORNERS AND EDGES SHALL HAVE 3/4" CHAMFERS. RE-ENTRANT CORNERS SHALL NOT HAVE FILLETS.

C 9 ANCHOR BOLTS
ANCHOR BOLTS SHALL BE STAINLESS STEEL TYPE 316 MATERIAL UNLESS OTHERWISE NOTED (SEE SPECIFICATIONS).

C 10 COMPATIBLE FINISHES
CURING COMPOUNDS AND OTHER SURFACE TREATMENTS AND CONCRETE ADMIXTURES AND SUB-SLAB DRAINAGE SHALL BE REVIEWED BY THE CONTRACTOR AND CERTIFIED COMPATIBLE WITH FINISHES TO BE APPLIED LATER IN THE CONSTRUCTION SEQUENCE.

MODIFICATION OF EXISTING CONCRETE

M1 THE FOLLOWING NOTES ON MODIFICATION OF EXISTING CONCRETE ARE GENERAL AND APPLY TO THE ENTIRE PROJECT, UNLESS OTHERWISE SPECIFIED.

M2 CONTRACTOR SHALL STRAIGHTEN AND SANDBLAST DOWELS WHERE INDICATED ON DRAWINGS AND WELD OR SPLICE WITH NEW REINFORCEMENT AS SPECIFIED ON THE DRAWINGS.

M3 SURFACES EXPOSED TO VIEW SHALL BE NEATLY SAWCUT TO A DEPTH OF 3/4" PRIOR TO REMOVING THE EXISTING CONCRETE. STOP SAWCUT AT CORNERS. DO NOT CUT PAST (USE NEAT CHIPPING).

M4 EXISTING CONCRETE SURFACES TO BE JOINED WITH NEW CONCRETE SHALL BE THOROUGHLY CLEANED BY SANDBLASTING, ROUGHENED TO A MINIMUM 1/4" AMPLITUDE AND COATED WITH EPOXY BONDING COMPOUND PRIOR TO PLACEMENT OF NEW CONCRETE.

M5 WHERE EXISTING CONCRETE IS REMOVED FROM SLAB AND WALLS TO REMAIN, PATCH SURFACE WHERE EXPOSED AS FOLLOWS: CHIP DOWN 3/4" MINIMUM BELOW ADJACENT SURFACE AND LEAVE ROUGH. CLEAN SURFACE. APPLY BONDING AGENT AND FINISH SURFACE TO MATCH ADJACENT WITH REPAIR MORTAR.

M6 DOWELS SHALL BE GROUTED BY COATING THE DRILLED HOLES AND DOWELS WITH EPOXY ADHESIVE BONDING COMPOUND (15 to 30 MILS) AND INSERTING THE DOWELS INTO THE HOLES. EPOXY ADHESIVE GROUT SHALL BE FORCED INTO HOLES TO FILL THE VOIDS.

M7 STRUCTURAL DIMENSIONS RELATED TO OR CONTROLLED BY EXISTING STRUCTURES SHALL BE VERIFIED IN FIELD BY THE CONTRACTOR PRIOR TO CONCRETE WORK.

M8 WHERE PLUG EXISTING OPENING IS INDICATED, CONTRACTOR SHALL REMOVE ANY ATTACHED METALWORK AND CONCRETE CURBS OR PROJECTIONS, ROUGHEN AND KEY EXISTING CONCRETE, COAT WITH EPOXY BONDING COMPOUND, AND POUR NEW CONCRETE FLUSH WITH ADJACENT SURFACES.

M9 UNLESS OTHERWISE SHOWN, NEW OPENINGS IN EXISTING CONCRETE SHALL BE CUT 2 INCHES OVER-SIZE, ROUGHENED, COATED WITH EPOXY BONDING COMPOUND, AND MORTAR FINISHED TO THE REQUIRED FINISH SIZE.

M10 CONTRACTOR SHALL LOCATE ALL EXISTING REINFORCEMENT PRIOR TO CORE DRILLING EXISTING CONCRETE USING NON DESTRUCTIVE SCANNING METHODS.

EPOXY ADHESIVE

GR 1 EPOXY ADHESIVE FOR ANCHORS AND DOWELS INTO CONCRETE: HILTI HIT-RE 500-SD EPOXY ADHESIVE ANCHOR SYSTEM BY HILTI INC., SIMPSON SET-XP BY SIMPSON OR EQUAL APPROVED BY ENGINEER OF RECORD.

DOWELS

D 1 PRIOR TO DRILLING HOLES, FIELD VERIFY AND MARK THE LOCATION OF NEARBY EXISTING REINFORCING BARS, STIRRUPS AND EMBEDMENTS USING NON DESTRUCTIVE SCANNING METHODS. THIS MAY INVOLVE RELOCATING DOWELS FROM POSITIONS SHOWN. NOTIFY THE OWNER OF ANY DOWEL RELOCATIONS.

D 2 CLEAN AND PREPARE HOLES IN ACCORDANCE WITH THE EPOXY ADHESIVE MANUFACTURER'S RECOMMENDATIONS. AS A MINIMUM, BLOW COMPRESSED OIL-FREE AIR FROM THE BOTTOM OF HOLE TOWARDS THE SURFACE. DRY AND CLEAN HOLE OF CONTAMINANTS.

D 3 FILL EACH HOLE WITH A SUFFICIENT AMOUNT OF EPOXY ADHESIVE TO COMPLETELY SURROUND THE DOWEL. INSERT THE DOWEL AFTER THE EPOXY IS PLACED IN THE HOLE.

STEEL

ST 1 ALL STRUCTURAL STEEL WORK SHALL BE IN ACCORDANCE WITH THE AISC "SPECIFICATION FOR STRUCTURAL STEEL BUILDINGS" (AISC 360-05) AND AISC "CODE OF STANDARD PRACTICE FOR STEEL BUILDINGS AND BRIDGES" (AISC 303-05). IN SEISMIC DESIGN CATEGORIES D, E AND F, THE PROVISIONS OF AISC 341-05, "SEISMIC PROVISIONS FOR STRUCTURAL STEEL BUILDINGS, INCLUDING SUPPLEMENT No. 1", SHALL ALSO APPLY .

ST 2 MATERIALS
1. STEEL WIDE FLANGE SHAPES SHALL CONFORM TO ASTM A992. OTHER STEEL SHAPES AND PLATES SHALL CONFORM TO ASTM A36.
2. STRUCTURAL STEEL PIPE SHALL CONFORM TO ASTM A53 TYPES E OR S, GRADE B. STRUCTURAL STEEL TUBING SHALL CONFORM TO ASTM A500 GRADE B (Fy = 46 KSI).
3. ALL STAINLESS STEEL SHALL BE TYPE 316 MEETING ASTM A276 FOR BARS AND SHAPES, AND ASTM A240 FOR PLATES, UNLESS OTHERWISE SPECIFIED. ALL STAINLESS STEEL SHALL BE PASSIVATED PER ASTM A380.

ST 3 WELDING
1. WELDING SHALL CONFORM TO AWS D1.1-1 AND AISC 341-05.
2. ELECTRODES FOR SHOP AND FIELD WELDS SHALL CONFORM TO AWS A5.1 OR A5.5, CLASS E70XX.
3. STAINLESS STEEL WELDING SHALL CONFORM TO AWS D1.6 WITH A5.4 OR A5.9 ELECTRODES.

ST 4 BOLTS
STRUCTURAL BOLTS AT STEEL FRAMING SHALL BE GALVANIZED AND CONFORM TO ASTM A325N (TYPE 1) FOR CONNECTION OF GALVANIZED OR PAINTED FRAMING. HIGH STRENGTH BOLTS SHALL BE FULLY TENSIONED UNLESS CONNECTING HSS SHAPES OR OTHERWISE NOTED. STAINLESS STEEL TYPE 316 BOLTS SHALL BE USED FOR CONNECTION OF STAINLESS STEEL AND ALUMINUM FRAMING.

ST 5 EXPANSION ANCHORS SHALL BE STAINLESS STEEL "KWIK BOLT TZ" BY HILTI INC. OR EQUAL APPROVED BY OWNER.

ST 6 ENCASED STEEL
STEEL COMPLETELY ENCASED IN CONCRETE SHALL NOT BE GALVANIZED OR PAINTED AND SHALL HAVE A CLEAN SURFACE FOR BONDING TO CONCRETE UNLESS OTHERWISE NOTED ON THE DRAWINGS.

ST 7 PAINTING
STRUCTURAL STEEL SHALL BE PAINTED IN ACCORDANCE WITH SPECIFICATION. SHOP PRIMER SHALL BE COMPATIBLE WITH FINISH COATINGS. MONORAIL CAPACITIES SHALL BE PAINTED ON THE SIDE OF MONORAIL BEAMS.

SPECIAL INSPECTIONS

SI 1 AN INDEPENDENT TESTING COMPANY RETAINED BY THE OWNER AND APPROVED BY THE BUILDING OFFICIAL SHALL INSPECT THE FOLLOWING:

1. SOIL COMPACTION AT FOUNDATIONS.
2. REINFORCING BAR, CONCRETE PLACEMENT AND TAKING OF CONCRETE TEST SPECIMENS.
3. ANCHOR BOLTS.
4. FIELD WELDING OF STRUCTURAL STEEL AND ALUMINUM.
5. SHOP WELDING OF STRUCTURAL STEEL EXCEPT WHERE WELDING IS DONE IN AN APPROVED FABRICATOR'S SHOP IN ACCORDANCE WITH THE PROVISIONS OF THE GOVERNING BUILDING CODE.
6. EXPANSION ANCHOR INSTALLATION.
7. ANCHORS INSTALLED USING EPOXY ADHESIVE.
8. MASONRY CONSTRUCTION.
9. MECHANICAL AND ELECTRICAL EQUIPMENT, PERIODIC SPECIAL INSPECTION OF STRUCTURAL COMPONENTS FOR SEISMIC RESISTANCE:
   - A. ANCHORAGE OF ELECTRICAL EQUIPMENT.
   - B. EMERGENCY AND STANDBY POWER SYSTEMS.
   - C. HVAC DUCTWORK THAT WILL CONTAIN HAZARDOUS MATERIALS.
   - D. INSTALLATION OF COMPONENTS WHERE THE COMPONENT IMPORTANCE FACTOR IS 1.5.
   - E. ELECTRICAL MOTORS, TRANSFORMERS, SWITCHGEAR UNIT SUBSTATIONS AND MOTOR CONTROL CENTERS.
   - F. TANKS, HEAT EXCHANGERS AND PRESSURE VESSELS.
   - G. EQUIPMENT VIBRATION ISOLATION SYSTEMS.

SI 2 CONTRACTOR SHALL NOTIFY THE TESTING COMPANY FOR ALL INSPECTIONS.

STRUCTURAL DEFERRED SUBMITTALS (CBC 2013, SECTION 107.3.4.2)

SDS 1 THE CONTRACTOR SHALL SUBMIT DRAWINGS AND CALCULATIONS BEARING THE SEAL OF A PROFESSIONAL ENGINEER LICENSED IN CALIFORNIA TO THE ENGINEER FOR REVIEW. STRUCTURAL DEFERRED SUBMITTALS INCLUDE:

1. VAULTS.
2. SLABS.
3. ANCHOR BOLTS FOR ALL EQUIPMENT ANCHORAGE.
4. GUARDRAILS AND HANDRAILS.
5. FLOOR AND ROOF ACCESS HATCHES.
6. ALTERNATE ROOF DECK FASTENING (IF USED).
7. CONSTRUCTION SHORING.

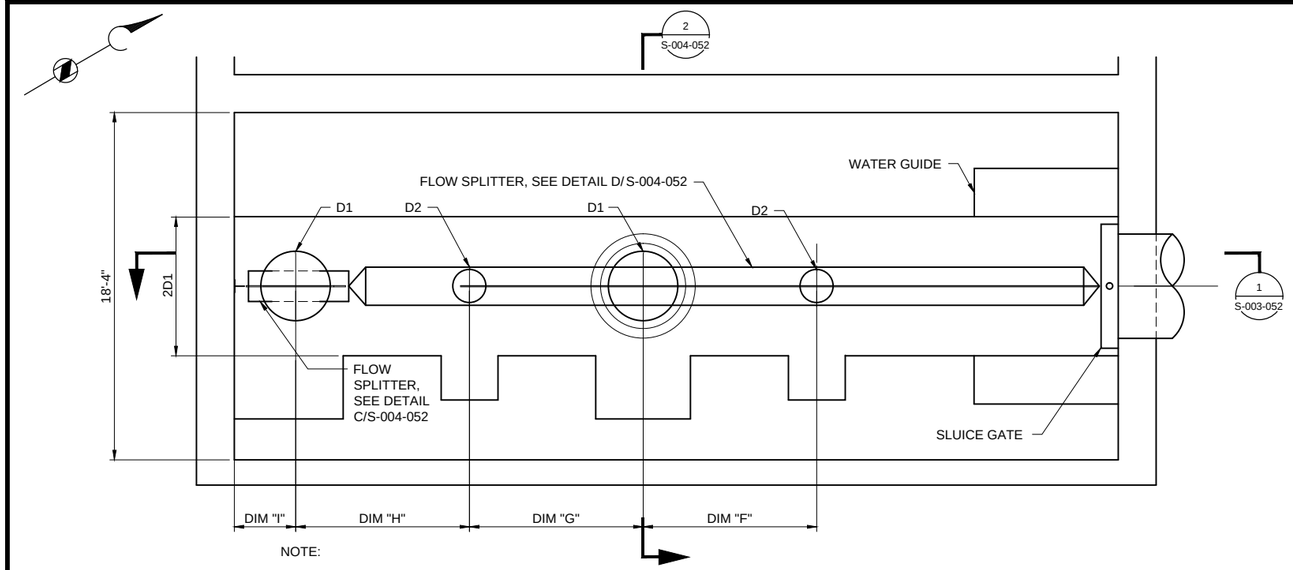

NOTE:

1. FOR DIMENSIONS, SEE TABLE ON SECTION 1/S-003-052.
2. D1 AND D2 CORRESPOND TO PUMP INTAKE BELL DIAMETER.

WET WELL
PLAN
SCALE: 1/4" = 1'-0"

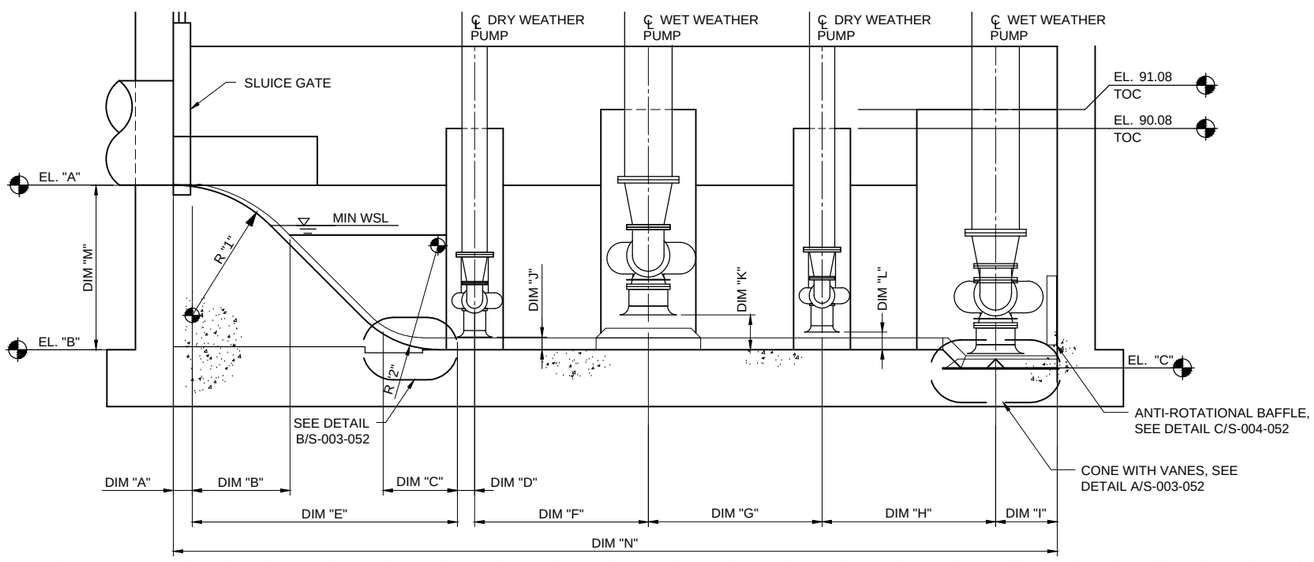

NAME	D1	D2	DIM "A"	DIM "B"	DIM "C"	DIM "D"	DIM "E"	DIM "F"	DIM "G"	DIM "H"	DIM "I"	DIM "J"	DIM "K"	DIM "L"	DIM "M"	DIM "N	R "1"	R "2"	EL "A"	EL "B"	EL "C"
PUMP STATION 2	44"	21"	12"	5'-2"±	3'-11"	11"	14'-0"	9'-2"	9'-2"	9'-2"	3'-3"	0.38D2	.5D1	.53D2	8'-8"	46'-8"	7'-3"	5'-6"	87.10	78.41	77.45

SECTION 1/S-003-052
SCALE: 1/4" = 1'-0"

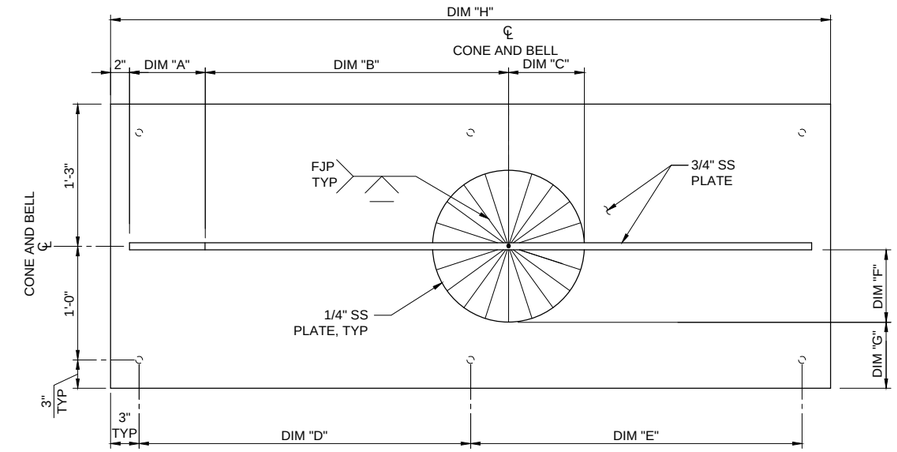

PLAN

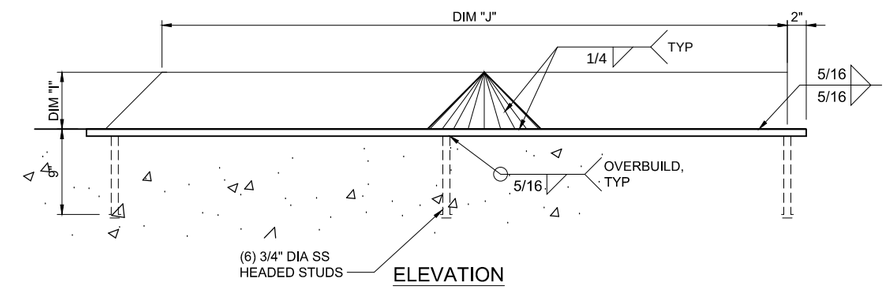

ELEVATION

NAME	DIM "A"	DIM "B"	DIM "C"	DIM "D"	DIM "E"	DIM "F"	DIM "G"	DIM "H"	DIM "I"	DIM "J"
PUMP STATION 2	8"	2'-8"	8"	2'-11"	2'-11"	7-5/8"	7"	6'-4"	8"	5'-4"

CONE WITH VANES
DETAIL A/S-003-052
SCALE: 1-1/2" = 1'-0"

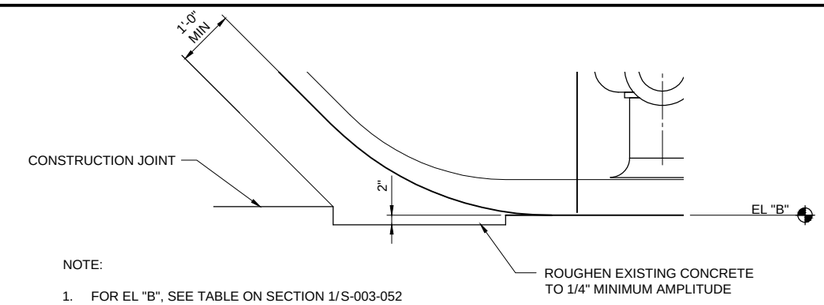

NOTE:

1. FOR EL "B", SEE TABLE ON SECTION 1/S-003-052

CONSTRUCTION JOINT
DETAIL B/S-003-052
SCALE: 3/4" = 1'-0"

Brown AND Caldwell
WALNUT CREEK, CALIFORNIA

SUBMITTED: _____ DATE: _____
PROJECT MANAGER
APPROVED: _____ DATE: _____
BROWN AND CALDWELL

LINE IS 2 INCHES AT FULL SIZE (IF NOT 2" - SCALE ACCORDINGLY)
SCALE: AS SHOWN
DESIGNED: ENGINEER
DRAWN: DRAFTER
CHECKED: CHECKED
APPROVED: APPROVED

EXTERNAL REFERENCE FILES
142399-TB-redwood city.dwg

PRELIMINARY

THIS DRAWING IS NOT VALID FOR CONSTRUCTION PURPOSES UNLESS IT BEARS THE SEAL AND SIGNATURE OF A DULY REGISTERED PROFESSIONAL

CHARLES W. JOYCE
ENGINEER-IN-RESPONSIBLE CHARGE
C33166
CALIFORNIA REGISTRATION NUMBER

REVISIONS

ZONE	REV.	DESCRIPTION	BY	DATE	APP.

PUMP STATION 2 PRE-DESIGN

SVCW Silicon Valley Clean Water

STRUCTURAL
PUMP STATION 2

WET WELL PLAN, SECTION AND DETAIL

FILENAME S-003-052.DWG
BC PROJECT NUMBER 142399
January 13, 2015
DRAWING NUMBER **S-003-052**
SHEET NUMBER 08 OF 67

Path: P:\142000\142399 - SBSA Pump Station Predesign\CADD\2-SHEETS\S-STRUCTURAL Filename: S-003-052.dwg Plot Date: January 13, 2015 - 12:30 PM CADD User: Burke, Fred

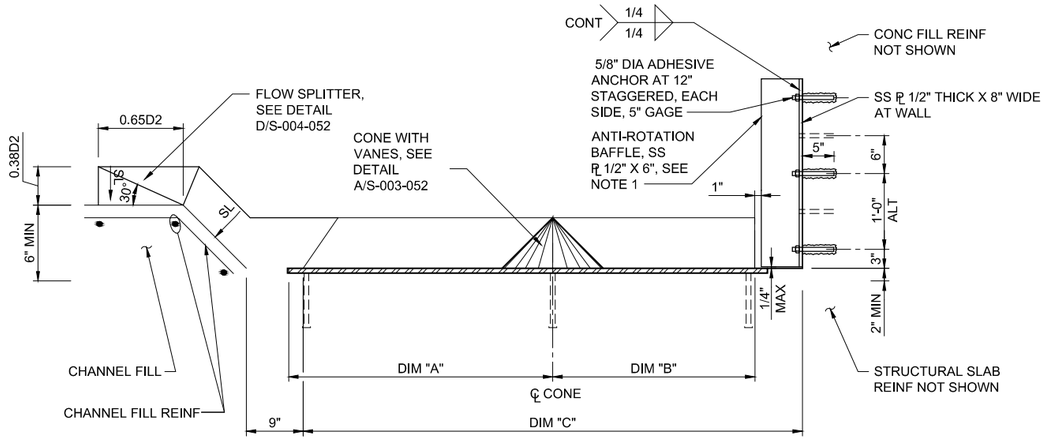

NAME	DIM "A"	DIM "B"	DIM "C"
PUMP STATION 2	3'-6"	2'-8"	6'-7"

NOTE:

1. HEIGHT OF ANTI-ROTATIONAL BAFFLE SHALL EXTEND FROM FLOOR TO BOTTOM OF PUMP VOLUTE. A CLEARANCE OF 3" SHALL BE MAINTAINED BETWEEN THE ANTI-ROTATIONAL BAFFLE AND PUMP VOLUTE.
2. FOR DIMENSIONS, SEE TABLES ON DETAIL D/S-004-052 AND C/S-004-052.

CONE WITH VANE AND ANTI-ROTATIONAL BAFFLE

DETAIL C / S-003-052

SCALE: 1" = 1'-0"

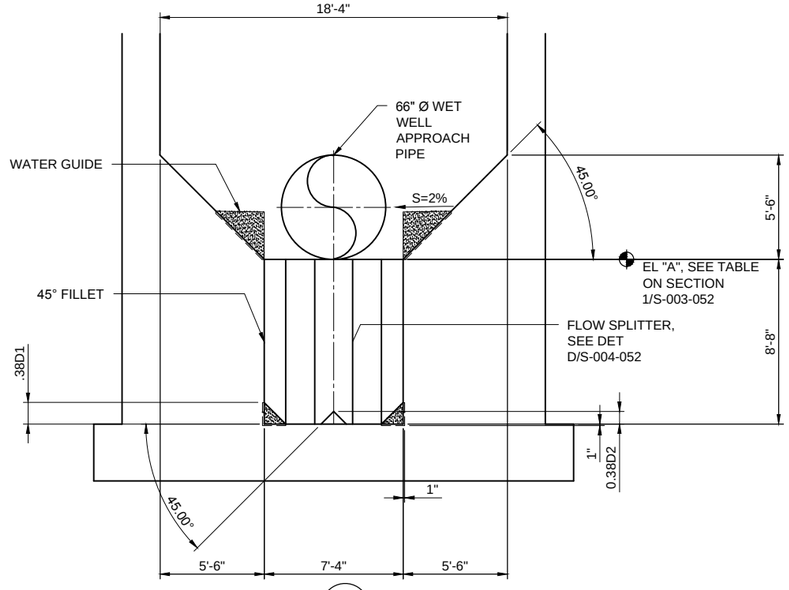

NOTE:

1. FOR DIMENSIONS, SEE TABLE ON DETAIL D/S-004-052.

SECTION 2 / S-003-052

SCALE: 1/4" = 1'-0"

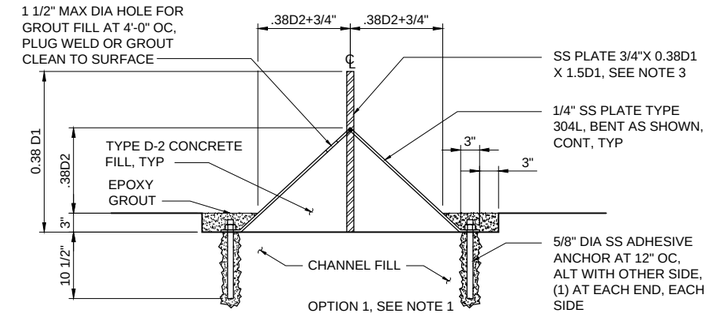

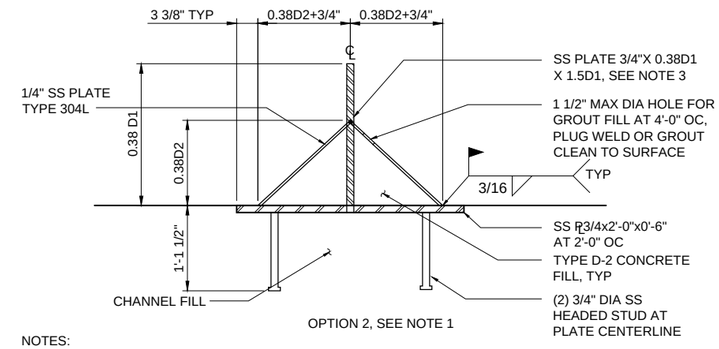

NOTES:

1. CONTRACTOR SHALL SELECT OPTION 1 OR 2 FOR INSTALLATION.
2. PLATES FABRICATED INDIVIDUALLY, INCLUDING END PIECES, SHALL BE WELDED TOGETHER WITH A FULL PENETRATION WELD, GRIND SMOOTH.
3. CONTRACTOR SHALL INSTALL 3/4" SS PLATE CENTERED BELOW SECOND PUMP FROM THE WET WELL INLET ONLY. THE REMAINING LENGTH OF THE FLOW SPLITTER SHALL EXCLUDE VERTICAL 3/4" SS PLATE.

NAME	D1	D2
PUMP STATION 2	44"	21"

FLOW SPLITTER

DETAIL D / VAR

SCALE: 1" = 1'-0"

Path: P:\142000\142399 - SBSA Pump Station Predesign\CADD\2-SHEETS\S-STRUCTURAL Filename: S-004-052.dwg Plot Date: January 13, 2015 - 12:30 PM CADD User: Burke, Fred

Brown AND Caldwell

WALNUT CREEK, CALIFORNIA

SUBMITTED: _____ DATE: _____
PROJECT MANAGER

APPROVED: _____ DATE: _____
BROWN AND CALDWELL

LINE IS 2 INCHES AT FULL SIZE (IF NOT 2" - SCALE ACCORDINGLY)

SCALE: AS SHOWN
DESIGNED: ENGINEER
DRAWN: DRAFTER
CHECKED: CHECKED
APPROVED: APPROVED

EXTERNAL REFERENCE FILES
E09051XS520-SECTIONS.dwg
142399-TB-redwood city.dwg

PRELIMINARY

THIS DRAWING IS NOT VALID FOR CONSTRUCTION PURPOSES UNLESS IT BEARS THE SEAL AND SIGNATURE OF A DULY REGISTERED PROFESSIONAL

CHARLES W. JOYCE
ENGINEER-IN-RESPONSIBLE CHARGE
C33166
CALIFORNIA REGISTRATION NUMBER

REVISIONS

ZONE	REV.	DESCRIPTION	BY	DATE	APP.

PUMP STATION 2 PRE-DESIGN

SVCW Silicon Valley Clean Water

STRUCTRAL

PUMP STATION 2

WET WELL SECTION AND DETAILS

FILENAME S-004-052.DWG
BC PROJECT NUMBER 142399
January 13, 2015
DRAWING NUMBER **S-004-052**
SHEET NUMBER 09 OF 67

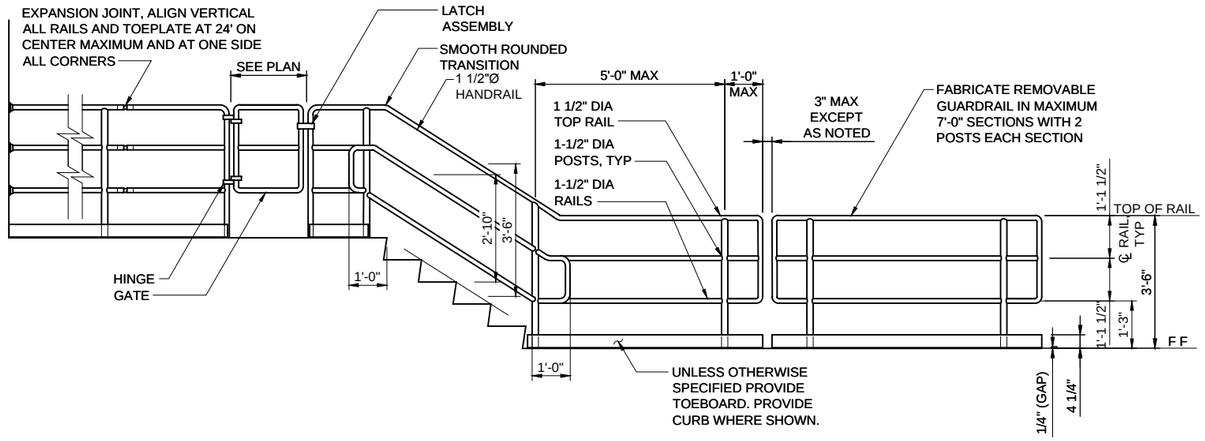

TYYPICAL HANDRAIL/GUARDRAIL

DETAIL E/VAR

SCALE: 3/4" = 1'-0"

GENERAL HANDRAIL/GUARDRAIL NOTES:

1. UNLESS OTHERWISE NOTED, HANDRAIL, GUARDRAIL, AND MOUNTING APPURTENANCES SHALL BE STAINLESS STEEL, TYPE 316.
2. ALL FASTENERS SHALL BE STAINLESS STEEL, TYPE 316.
3. UNLESS SPECIFICALLY INDICATED OTHERWISE, GUARDRAIL MOUNTING MAY BE SIDE MOUNT OR FLOOR MOUNTED AS APPLICABLE.
4. RAILING POST LOCATION SHALL BE FIELD MEASURED AND RAILING FABRICATED TO FIT.
5. TOP AND MIDDLE RAILS SHALL BE CONTINUOUS EXCEPT AT GUARDRAIL SECTIONS SPECIFICALLY CALLED OUT ON DRAWINGS AS REMOVABLE GUARDRAIL.
6. THE SPACING OF EXPANSION JOINTS IN GUARDRAILS AND TOEBOARDS SHALL NOT EXCEED 24 FEET.

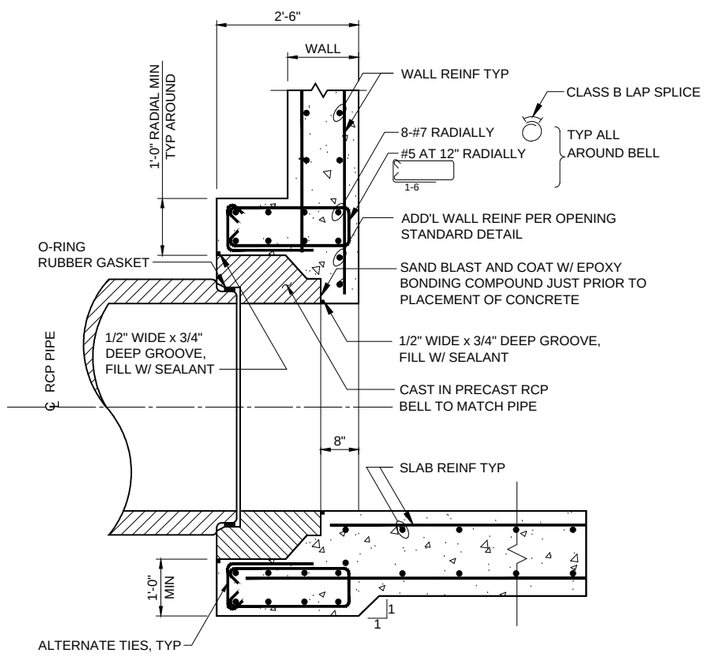

PIPE JOINT AT PIT

DETAIL F/VAR

SCALE: 3/4" = 1'-0"

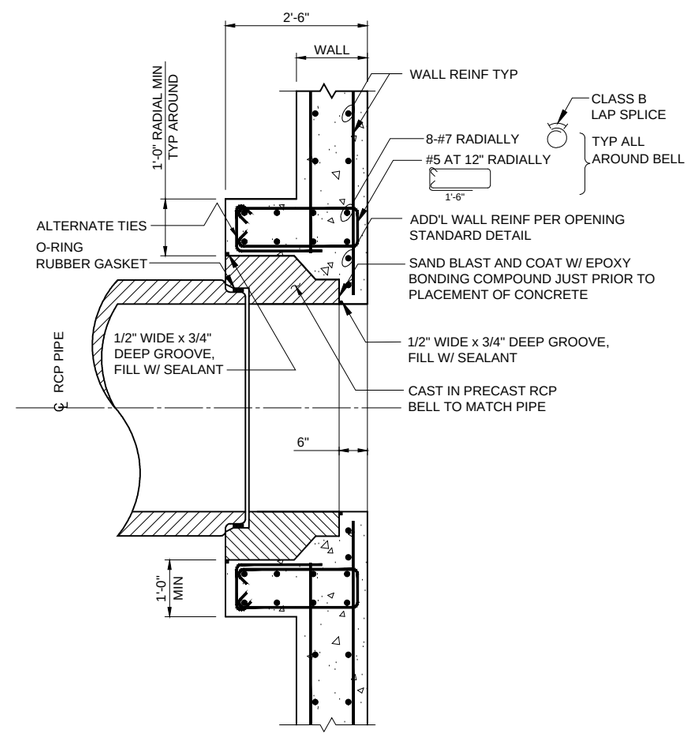

PIPE JOINT AT WALL

DETAIL G/VAR

SCALE: 3/4" = 1'-0"

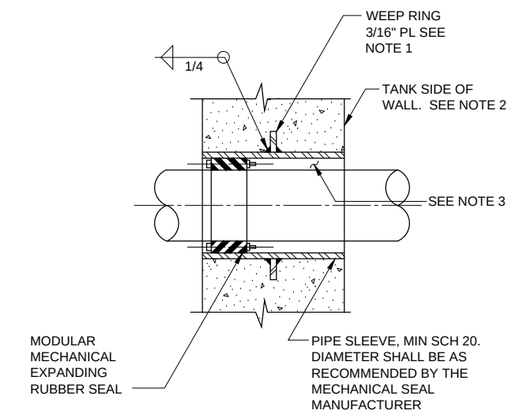

1. WEEP RINGS SHALL HAVE A MINIMUM DIAMETER OF 3-INCHES GREATER THAN THE OUTSIDE PIPE DIAMETER.
2. "TANK SIDE OF WALL" SHALL MEAN SIDE OF WALL NORMALLY EXPOSED TO LIQUID, EARTH, OR OUTSIDE ATMOSPHERE.
3. SEAL WITH MASTIC SEALANT WHERE WALL IS EXPOSED TO LIQUID, EARTH, OR A HAZARDOUS (CLASSIFIED) AREA.

TYPE D PIPE PENETRATION

DETAIL H/VAR

SCALE: 3/4" = 1'-0"

Brown AND Caldwell

WALNUT CREEK, CALIFORNIA

SUBMITTED: _____ DATE: _____
PROJECT MANAGER

APPROVED: _____ DATE: _____
BROWN AND CALDWELL

LINE IS 2 INCHES AT FULL SIZE (IF NOT 2" - SCALE ACCORDINGLY)

SCALE: AS SHOWN
DESIGNED: ENGINEER
DRAWN: DRAFTER
CHECKED: CHECKED
APPROVED: APPROVED

EXTERNAL REFERENCE FILES
E0905TXS520-SECTIONS.dwg
142399-TB-redwood city.dwg

PRELIMINARY

THIS DRAWING IS NOT VALID FOR CONSTRUCTION PURPOSES UNLESS IT BEARS THE SEAL AND SIGNATURE OF A DULY REGISTERED PROFESSIONAL

CHARLES W. JOYCE
ENGINEER-IN-RESPONSIBLE CHARGE
C33166
CALIFORNIA REGISTRATION NUMBER

REVISIONS

ZONE	REV.	DESCRIPTION	BY	DATE	APP.

PUMP STATION 2 PRE-DESIGN

SVCW Silicon Valley Clean Water

STRUCTURAL

PUMP STATION 2

DETAILS 1

FILENAME S-005-052.DWG
BC PROJECT NUMBER 142399
January 13, 2015
DRAWING NUMBER **S-005-052**
SHEET NUMBER 10 OF 67

Path: P:\142000\142399 - SBSA Pump Station Predesign\CADD\2-SHEETS\S-STRUCTURAL Filename S-005-052.dwg Plot Date: January 13, 2015 - 12:30 PM CADD User: Burke, Fred

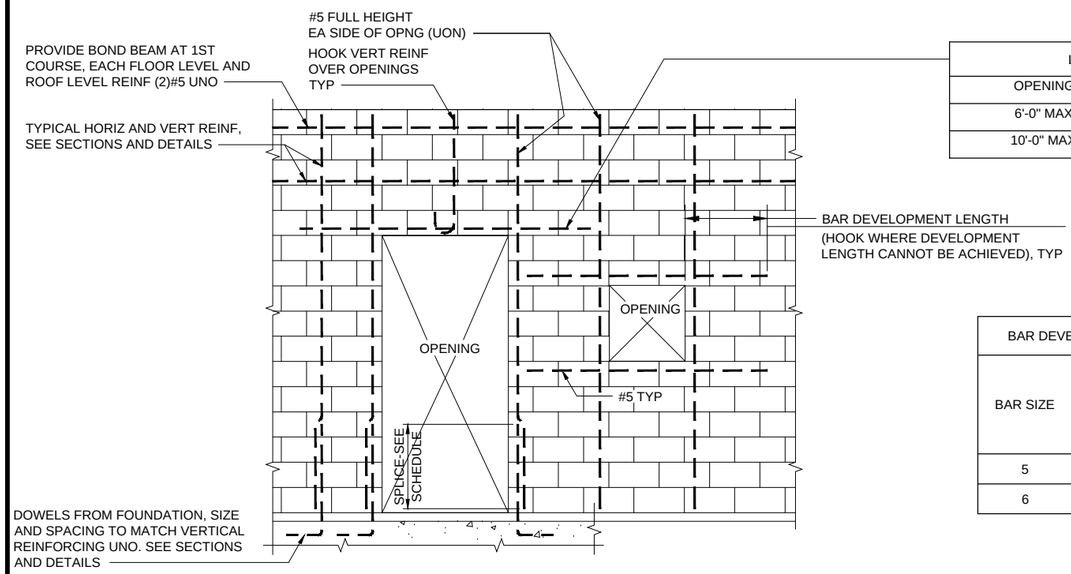

LINTEL REINFORCING	
OPENING	REINF
6'-0" MAX	(2)#5
10'-0" MAX	(2)#6

BAR DEVELOPMENT OR SPLICE LENGTH	
BAR SIZE	8" CMU
	SINGLE CURTAIN REINF
5	3'-9"
6	4'-6"

NOTES:

1. GROUT ALL CELLS SOLID.
2. UNLESS NOTED OTHERWISE, 8" CMU WALLS SHALL BE REINFORCED WITH #5 @ 32" VERTICAL (CENTERED IN WALL) AND #5 @ 32" HORIZONTAL IN BOND BEAMS.

NOTE:

1. UNLESS NOTED OTHERWISE IN THE DRAWINGS, ALL DEVELOPMENT AND SPLICE LENGTHS SHALL CONFORM TO THE TABLE ABOVE.

TYPICAL MASONRY WALL ELEVATION

DETAIL I / VAR

SCALE: 1:1

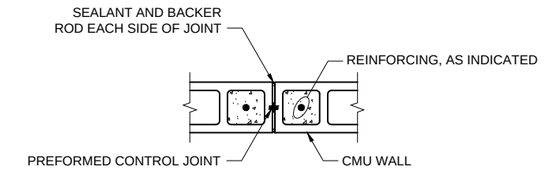

PLAN
TYPICAL EXCEPT AT ROOF AND FLOOR LEVEL BOND BEAMS

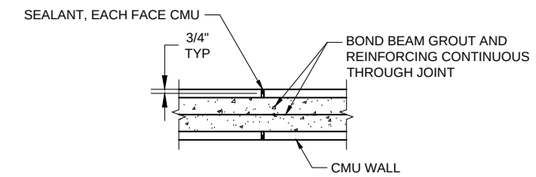

PLAN
AT ROOF AND FLOOR LEVEL BOND BEAMS

NOTE:

1. ALL HORIZONTAL REINFORCING IS TO BE DISCONTINUOUS AT CONTROL JOINTS EXCEPT BOND BEAM REINFORCING AT ROOF LEVEL, FLOOR LEVEL(S), AND PARAPET LEVEL (IF APPLICABLE).

TYPICAL MASONRY WALL CONTROL JOINT

DETAIL L / VAR

SCALE: 1:1

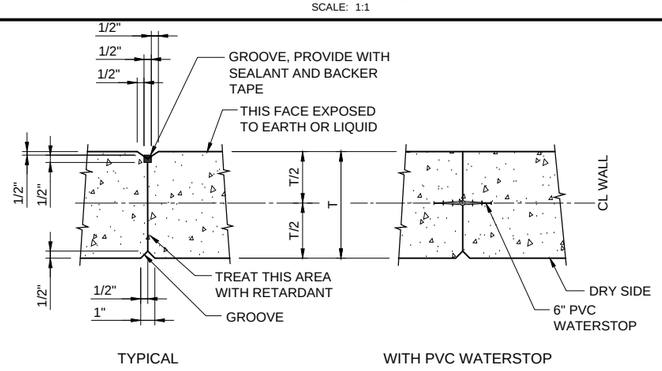

NOTES:

1. ALL REINFORCING TO BE CONTINUOUS THROUGH JOINT.
2. WATERSTOP REQUIRED AT LIQUID HOLDING BASINS AND TANKS, AND BELOW GRADE WALLS.

VERTICAL CONSTRUCTION JOINT AT WALLS

DETAIL J / VAR

SCALE: 1:1

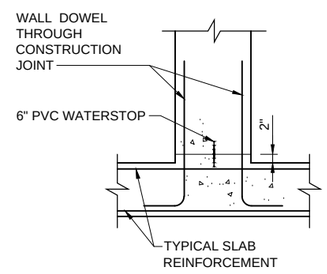

CONCRETE CONSTRUCTION JOINT AT WALL/BASE SLAB

DETAIL K / VAR

SCALE: 1:1

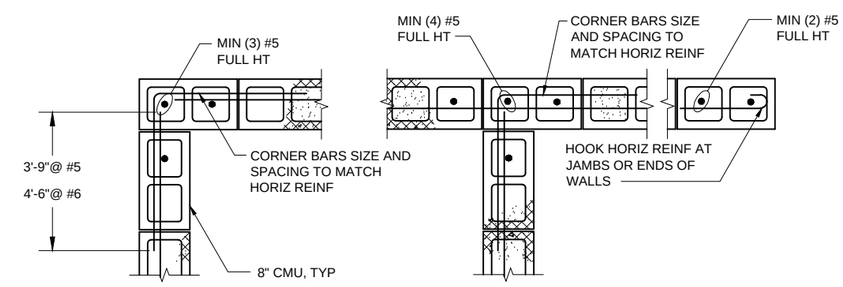

NOTE:

1. ALL CELLS TO BE SOLID GROUTED.

TYPICAL MASONRY CORNER REINFORCING

DETAIL M / VAR

SCALE: 1:1

Brown AND Caldwell

WALNUT CREEK, CALIFORNIA

SUBMITTED: _____ DATE: _____
PROJECT MANAGER

APPROVED: _____ DATE: _____
BROWN AND CALDWELL

LINE IS 2 INCHES AT FULL SIZE (IF NOT 2" - SCALE ACCORDINGLY)

SCALE: AS SHOWN
DESIGNED: ENGINEER
DRAWN: DRAFTER
CHECKED: CHECKED
APPROVED: APPROVED

EXTERNAL REFERENCE FILES
E09051XS520-SECTIONS.dwg
142399-TB-redwood city.dwg

PRELIMINARY

THIS DRAWING IS NOT VALID FOR CONSTRUCTION PURPOSES UNLESS IT BEARS THE SEAL AND SIGNATURE OF A DULY REGISTERED PROFESSIONAL

CHARLES W. JOYCE
ENGINEER-IN-RESPONSIBLE CHARGE
C33166
CALIFORNIA REGISTRATION NUMBER

REVISIONS

ZONE	REV.	DESCRIPTION	BY	DATE	APP.

PUMP STATION 2 PRE-DESIGN

SVCW Silicon Valley Clean Water

STRUCTURAL

PUMP STATION 2

DETAILS 2

FILENAME
S-006-052.DWG

BC PROJECT NUMBER
142399

January 13, 2015

DRAWING NUMBER
S-006-052

SHEET NUMBER
11 OF 67

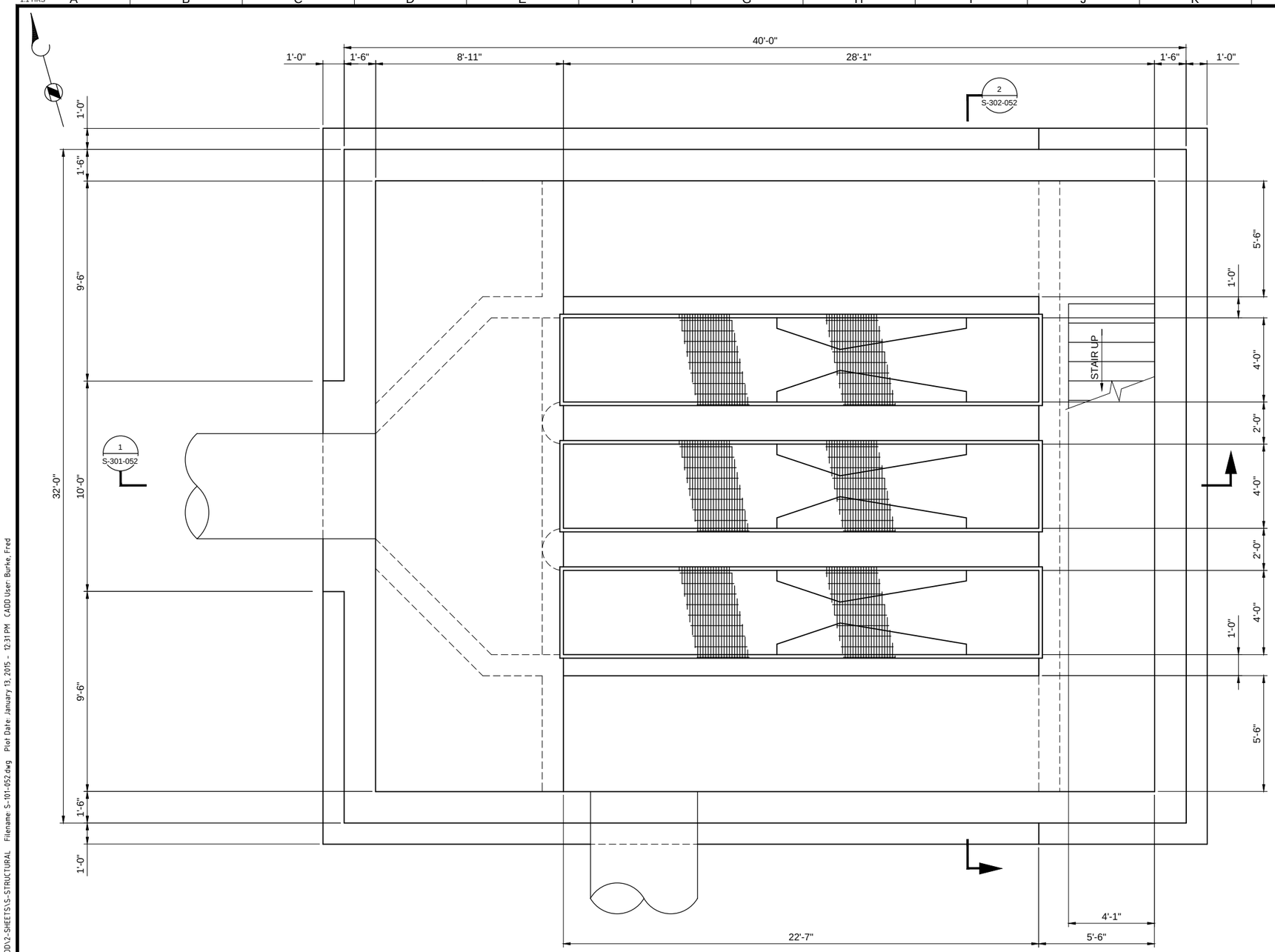

PUMP STATION #2 SCREENING FACILITY
AT ELEVATION 95.64

PLAN

SCALE: 3/8" = 1'-0"

Path: P:\142000\142399 - SBSA Pump Station Predesign\CADD\2-SHEETS\S-STRUCTURAL Filename: S-101-052.dwg Plot Date: January 13, 2015 - 12:31 PM CADD User: Burke, Fred

Brown AND Caldwell

WALNUT CREEK, CALIFORNIA

SUBMITTED: _____ DATE: _____
PROJECT MANAGER

APPROVED: _____ DATE: _____
BROWN AND CALDWELL

LINE IS 2 INCHES
AT FULL SIZE
(IF NOT 2" - SCALE ACCORDINGLY)

SCALE: AS SHOWN
DESIGNED: ENGINEER
DRAWN: R. BLUMENSHINE
CHECKED: CHECKED
APPROVED: APPROVED

EXTERNAL REFERENCE FILES
142399-TB-redwood city.dwg
142399-MF-02RC-S-SCRN-LVL1-2D-plans.dwg
142399-MF-02RC-S-SCRN-LVL1-3D.dwg

PRELIMINARY

THIS DRAWING IS NOT VALID FOR CONSTRUCTION PURPOSES UNLESS IT BEARS THE SEAL AND SIGNATURE OF A DULY REGISTERED PROFESSIONAL

CHARLES W. JOYCE
ENGINEER-IN-RESPONSIBLE CHARGE
C33166
CALIFORNIA REGISTRATION NUMBER

REVISIONS

ZONE	REV.	DESCRIPTION	BY	DATE	APP.

PUMP STATION 2 PRE-DESIGN

SVCW Silicon Valley Clean Water

STRUCTURAL

PUMP STATION 2

SCREENING BUILDING LOWER LEVEL PLAN

FILENAME
S-101-052.DWG
BC PROJECT NUMBER
142399
January 13, 2015
DRAWING NUMBER
S-101-052
SHEET NUMBER
12 OF 67

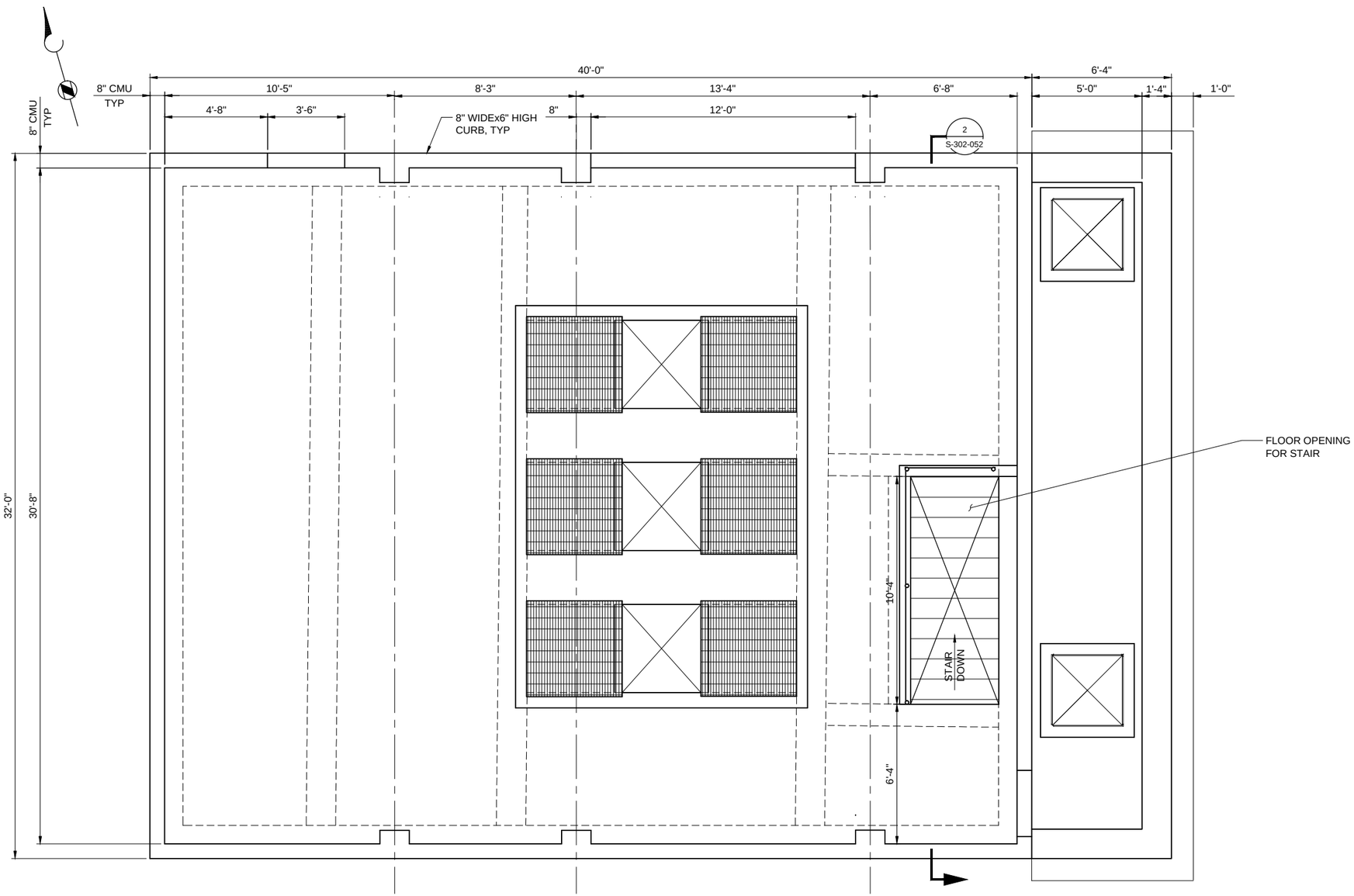

PUMP STATION #2 SCREENING FACILITY
AT ELEVATION 107.04

PLAN

SCALE: 3/8" = 1'-0"

Brown AND Caldwell
WALNUT CREEK, CALIFORNIA

SUBMITTED: _____ DATE: _____
PROJECT MANAGER
APPROVED: _____ DATE: _____
BROWN AND CALDWELL

LINE IS 2 INCHES
AT FULL SIZE
(IF NOT 2" - SCALE ACCORDINGLY)

SCALE: AS SHOWN
DESIGNED: ENGINEER
DRAWN: R. BLUMENSHINE
CHECKED: CHECKED
APPROVED: APPROVED

EXTERNAL REFERENCE FILES
142399-TB-redwood city.dwg
142399-MF-02RC-S-SCRN-LVL1-3D.dwg
142399-MF-02RC-S-SCRN-LVL2-2D-plans.dwg
142399-MF-02RC-S-SCRN-LVL2-3D.dwg

PRELIMINARY

THIS DRAWING IS NOT VALID FOR CONSTRUCTION PURPOSES UNLESS IT BEARS THE SEAL AND SIGNATURE OF A DULY REGISTERED PROFESSIONAL

CHARLES W. JOYCE
ENGINEER-IN-RESPONSIBLE CHARGE
C33166
CALIFORNIA REGISTRATION NUMBER

REVISIONS

ZONE	REV.	DESCRIPTION	BY	DATE	APP.

PUMP STATION 2 PRE-DESIGN

SVCW Silicon Valley Clean Water

STRUCTURAL
PUMP STATION 2

SCREENING BUILDING GROUND FLOOR PLAN

FILENAME
S-102-052.DWG
BC PROJECT NUMBER
142399
January 13, 2015
DRAWING NUMBER
S-102-052
SHEET NUMBER
13 OF 67

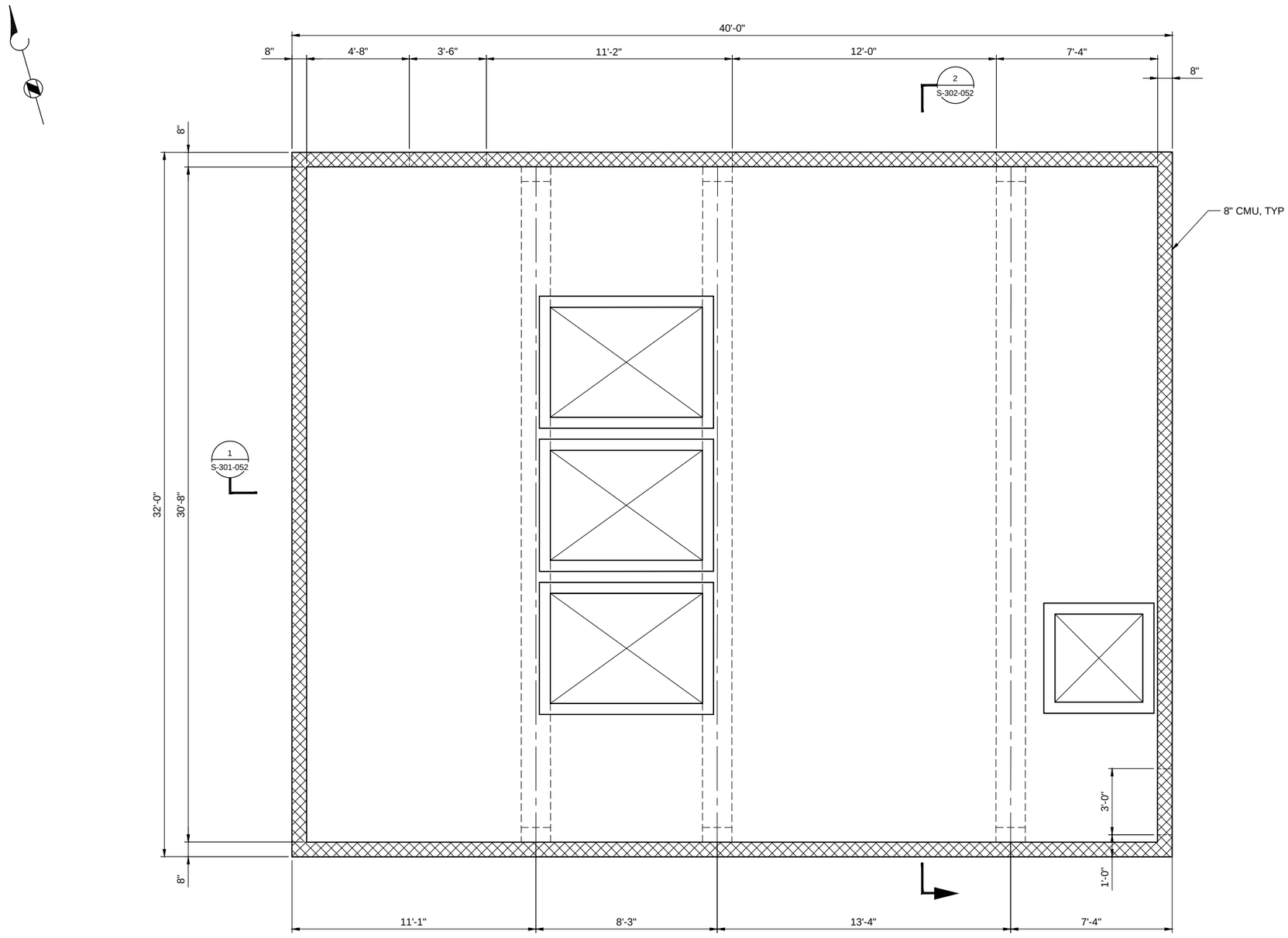

PUMP STATIONS #2 SCREENING FACILITY
ROOF FRAMING PLAN AT ELEVATION 122.04

PLAN

SCALE: 3/8" = 1'-0"

Brown AND Caldwell
WALNUT CREEK, CALIFORNIA

SUBMITTED: _____ DATE: _____
PROJECT MANAGER
APPROVED: _____ DATE: _____
BROWN AND CALDWELL

LINE IS 2 INCHES AT FULL SIZE (IF NOT 2" - SCALE ACCORDINGLY)
SCALE: AS SHOWN
DESIGNED: ENGINEER
DRAWN: R. BLUMENSHINE
CHECKED: CHECKED
APPROVED: APPROVED

EXTERNAL REFERENCE FILES
142399-TB-redwood city.dwg
142399-MF-02RC-S-SCRN-LVL2-2D-plans.dwg
142399-MF-02RC-S-SCRN-LVL2-3D.dwg

PRELIMINARY

THIS DRAWING IS NOT VALID FOR CONSTRUCTION PURPOSES UNLESS IT BEARS THE SEAL AND SIGNATURE OF A DULY REGISTERED PROFESSIONAL

CHARLES W. JOYCE
ENGINEER-IN-RESPONSIBLE CHARGE
C33166
CALIFORNIA REGISTRATION NUMBER

REVISIONS

ZONE	REV.	DESCRIPTION	BY	DATE	APP.

PUMP STATION 2 PRE-DESIGN

SVCW Silicon Valley Clean Water

STRUCTURAL
PUMP STATION 2

SCREENING BUILDING UPPER LEVEL PLAN

FILENAME S-103-052.DWG
BC PROJECT NUMBER 142399
January 13, 2015
DRAWING NUMBER **S-103-052**
SHEET NUMBER 14 OF 67

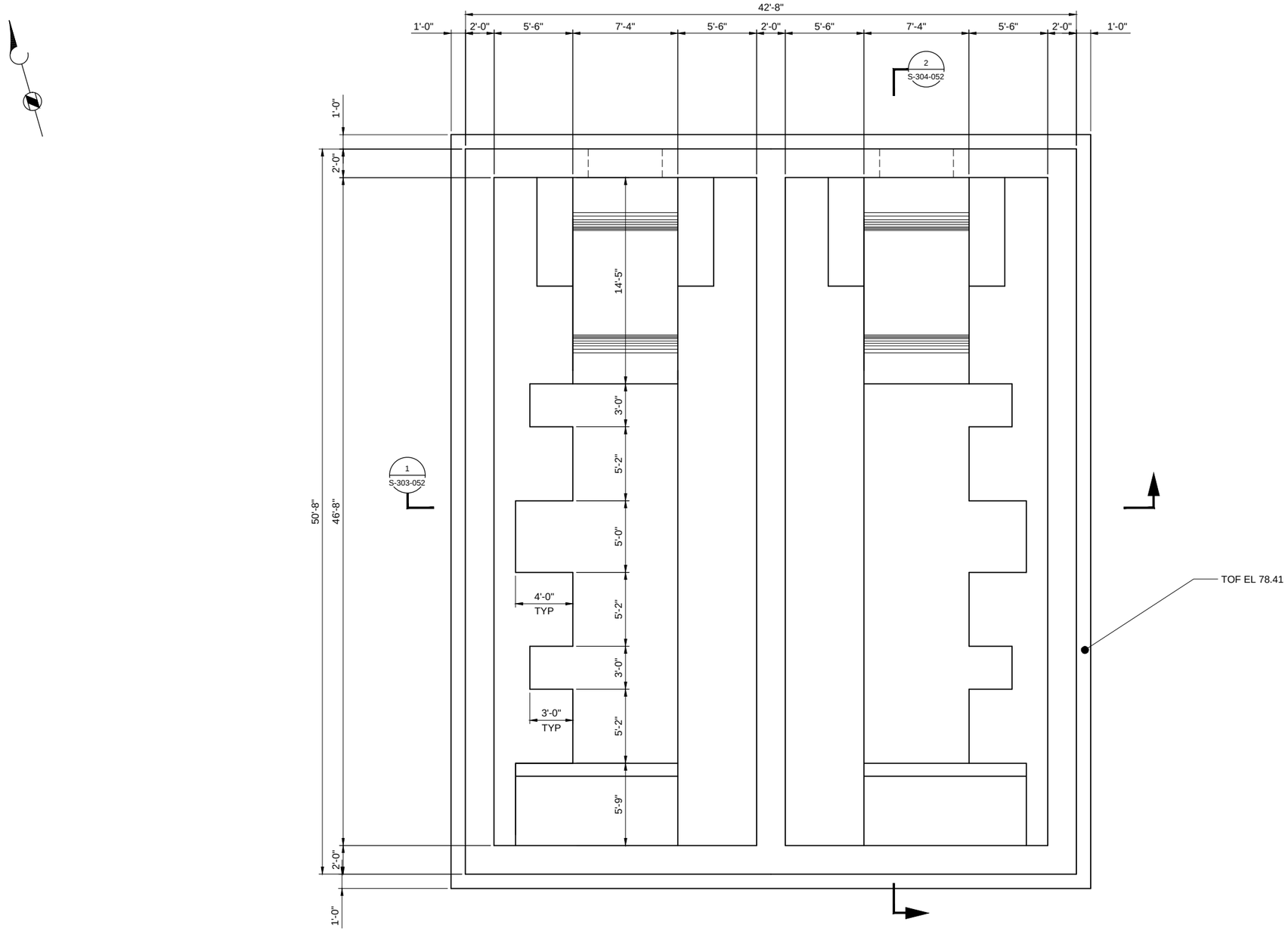

REDWOOD CITY PUMP STATION #2
AT ELEVATION 78'-6"

PLAN

SCALE: 1/4" = 1'-0"

Brown AND Caldwell
WALNUT CREEK, CALIFORNIA

SUBMITTED: _____ DATE: _____
PROJECT MANAGER
APPROVED: _____ DATE: _____
BROWN AND CALDWELL

LINE IS 2 INCHES
AT FULL SIZE
(IF NOT 2" - SCALE ACCORDINGLY)

SCALE: AS SHOWN
DESIGNED: ENGINEER
DRAWN: R. KINGERY
CHECKED: CHECKED
APPROVED: APPROVED

EXTERNAL REFERENCE FILES
142399-TB-redwood city.dwg
142399-MF-02RC-S-NPS-LVL1-2D-plans.dwg
142399-MF-02RC-S-NPS-LVL1-3D.dwg

PRELIMINARY

THIS DRAWING IS NOT VALID FOR CONSTRUCTION PURPOSES UNLESS IT BEARS THE SEAL AND SIGNATURE OF A DULY REGISTERED PROFESSIONAL

CHARLES W. JOYCE
ENGINEER-IN-RESPONSIBLE CHARGE
C33166
CALIFORNIA REGISTRATION NUMBER

REVISIONS

ZONE	REV.	DESCRIPTION	BY	DATE	APP.

PUMP STATION 2 PRE-DESIGN

SVCW Silicon Valley Clean Water

STRUCTURAL
PUMP STATION 2

WET WELL AND VALVE VAULT BOTTOM PLAN

FILENAME
S-104-052.DWG
BC PROJECT NUMBER
142399
January 13, 2015
DRAWING NUMBER
S-104-052
SHEET NUMBER
15 OF 67

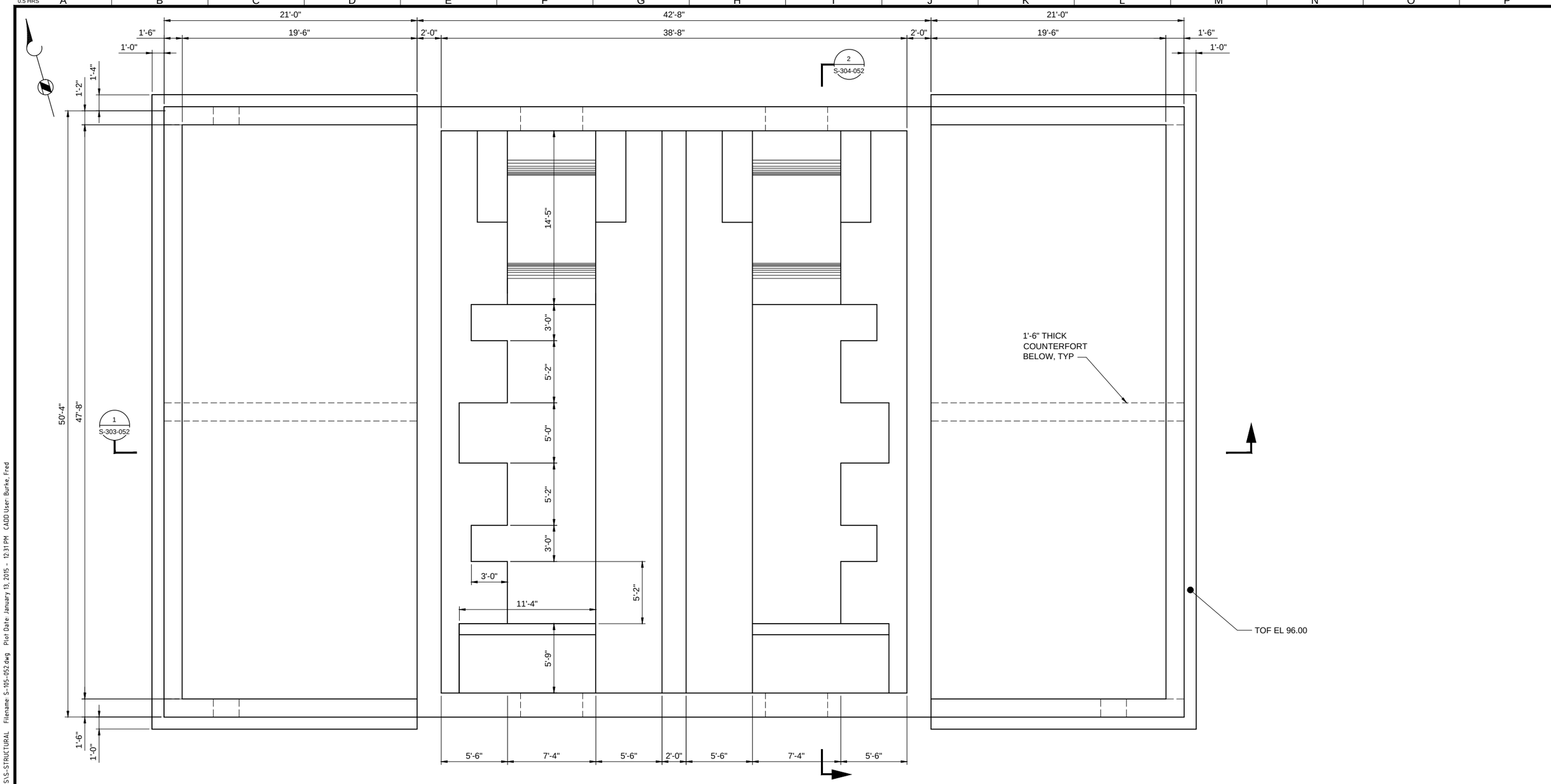

REDWOOD CITY PUMP STATION #2
AT ELEVATION 98'-2"

PLAN

SCALE: 1/4" = 1'-0"

Brown AND Caldwell
WALNUT CREEK, CALIFORNIA

SUBMITTED: _____ DATE: _____
PROJECT MANAGER
APPROVED: _____ DATE: _____
BROWN AND CALDWELL

LINE IS 2 INCHES
AT FULL SIZE
(IF NOT 2" - SCALE ACCORDINGLY)

SCALE: AS SHOWN
DESIGNED: ENGINEER
DRAWN: R. KINGERY
CHECKED: CHECKED
APPROVED: APPROVED

EXTERNAL REFERENCE FILES
142399-TB-redwood city.dwg
142399-MF-02RC-S-NPS-LVL2-2D-plans.dwg
142399-MF-02RC-S-NPS-LVL1-3D.dwg

PRELIMINARY

THIS DRAWING IS NOT VALID FOR CONSTRUCTION PURPOSES UNLESS IT BEARS THE SEAL AND SIGNATURE OF A DULY REGISTERED PROFESSIONAL

CHARLES W. JOYCE
ENGINEER-IN-RESPONSIBLE CHARGE
C33166
CALIFORNIA REGISTRATION NUMBER

REVISIONS

ZONE	REV.	DESCRIPTION	BY	DATE	APP.

PUMP STATION 2 PRE-DESIGN

SVCW Silicon Valley Clean Water

STRUCTURAL
PUMP STATION 2

WET WELL AND VALVE VAULT
INTERMEDIATE PLAN

FILENAME
S-105-052.DWG
BC PROJECT NUMBER
142399
January 13, 2015
DRAWING NUMBER
S-105-052
SHEET NUMBER
16 OF 67

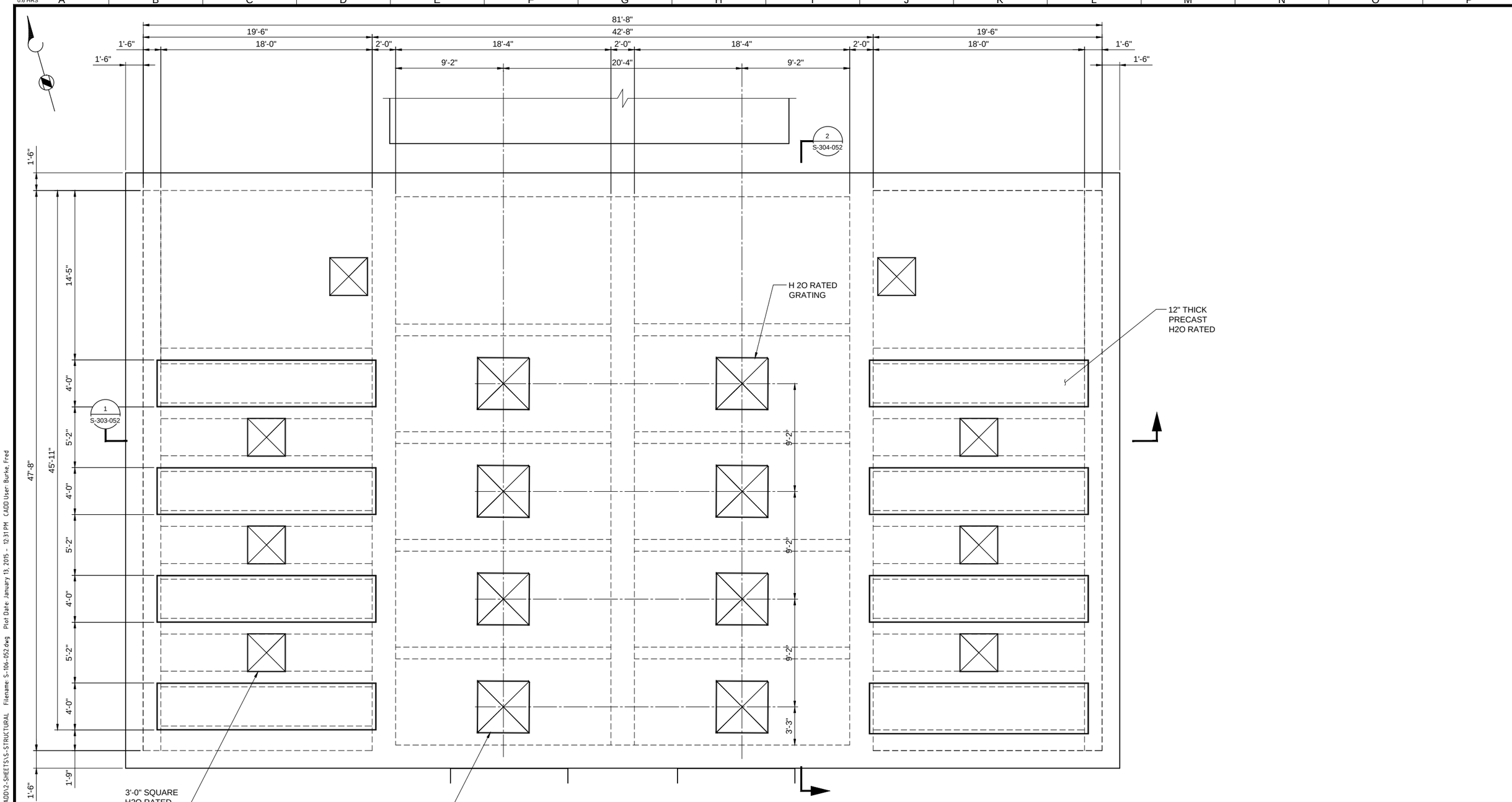

PUMP STATION #2
ROOF FRAMING PLAN

PLAN

SCALE: 1/4" = 1'-0"

Path: P:\142000\142399 - SBSA Pump Station Predesign\CADD\2-SHEETS\S-STRUCTURAL Filename: S-106-052.dwg Plot Date: January 13, 2015 - 12:31 PM CADD User: Burke, Fred

Brown AND Caldwell

WALNUT CREEK, CALIFORNIA

SUBMITTED: _____ DATE: _____
PROJECT MANAGER

APPROVED: _____ DATE: _____
BROWN AND CALDWELL

LINE IS 2 INCHES
AT FULL SIZE
(IF NOT 2" - SCALE ACCORDINGLY)

SCALE: AS SHOWN

DESIGNED: ENGINEER
DRAWN: R. KINGERY
CHECKED: CHECKED
APPROVED: APPROVED

EXTERNAL REFERENCE FILES
142399-TB-redwood city.dwg
142399-MF-02RC-S-NPS-LVL3-2D-plans.dwg
142399-MF-02RC-S-NPS-LVL1-3D.dwg
142399-MF-02RC-S-NPS-LVL2-3D.dwg
142399-MF-02RC-S-NPS-LVL3-3D.dwg

PRELIMINARY

THIS DRAWING IS NOT VALID FOR CONSTRUCTION PURPOSES UNLESS IT BEARS THE SEAL AND SIGNATURE OF A DULY REGISTERED PROFESSIONAL

CHARLES W. JOYCE
ENGINEER-IN-RESPONSIBLE CHARGE
C33166
CALIFORNIA REGISTRATION NUMBER

REVISIONS

ZONE	REV.	DESCRIPTION	BY	DATE	APP.

PUMP STATION 2 PRE-DESIGN

SVCW
Silicon Valley Clean Water

STRUCTURAL

PUMP STATION 2

WET WELL AND VALVE VAULT TOP PLAN

FILENAME
S-106-052.DWG

BC PROJECT NUMBER
142399

January 13, 2015

DRAWING NUMBER
S-106-052

SHEET NUMBER
17 OF 67

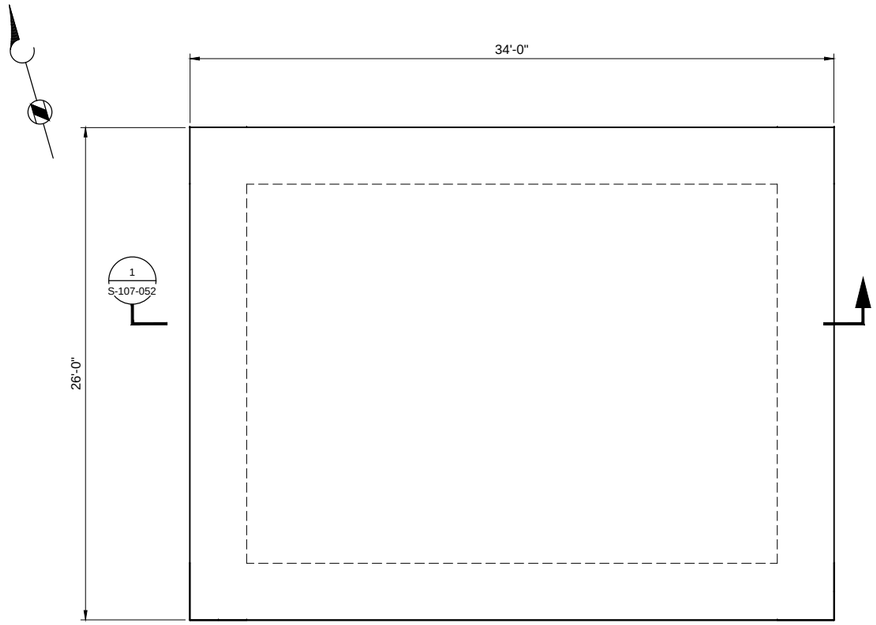

SURGE SUPRESSION SLAB

PLAN

SCALE: 1/4"=1'-0"

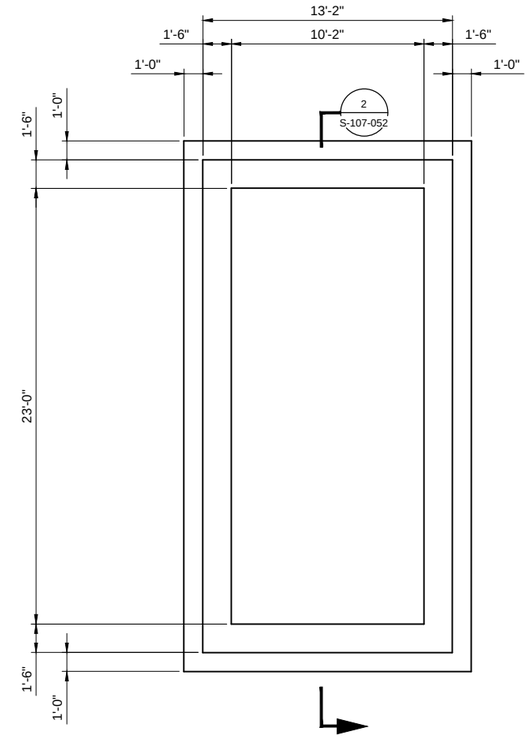

EFFLUENT STRUCTURE

PLAN

SCALE: 1/4"=1'-0"

GENERAL NOTES:

1. GENERAL NOTE ONE STARTS HERE .... MTEXT USED WITH LINE SPACING SET TO EXACT. SET TAB SPACING TO 0.3-INCHES.
2. GENERAL NOTE TEXT INSERTED ON LAYER S-ANNO.

KEY NOTES:

(XX) KEY NOTE ONE STARTS HERE .... KEY NOTE BUBBLES INSERTED ON LAYER S-ANNO-SYMB.

(YY) KEY NOTE TEXT INSERTED ON LAYER S-ANNO.

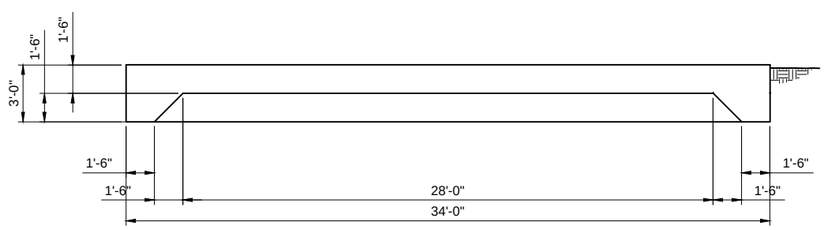

SECTION 1 / S-107-052

SCALE: 1/4"=1'-0"

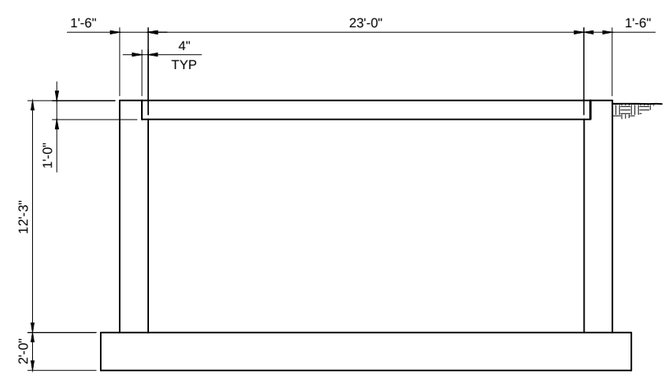

SECTION 2 / S-107-052

SCALE: 1/4"=1'-0"

Path: P:\142000\142399 - SBSA Pump Station Predesign\CADD\2-SHEETS\S-STRUCTURAL Filename: S-107-052.dwg Plot Date: January 13, 2015 - 12:31 PM CADD User: Burke, Fred

Brown AND Caldwell

WALNUT CREEK, CALIFORNIA

SUBMITTED: _____ DATE: _____
PROJECT MANAGER

APPROVED: _____ DATE: _____
BROWN AND CALDWELL

LINE IS 2 INCHES AT FULL SIZE (IF NOT 2" - SCALE ACCORDINGLY)

SCALE: AS SHOWN

DESIGNED: ENGINEER
DRAWN: R. BLUMENSHINE
CHECKED: CHECKED
APPROVED: APPROVED

EXTERNAL REFERENCE FILES
142399-TB-redwood city.dwg
142399-MF-02RC-S-NPS-LVL3-2D-plans.dwg
142399-MF-02RC-S-NPS-LVL1-3D.dwg
142399-MF-02RC-S-NPS-LVL2-3D.dwg
142399-MF-02RC-S-NPS-LVL3-3D.dwg

PRELIMINARY

THIS DRAWING IS NOT VALID FOR CONSTRUCTION PURPOSES UNLESS IT BEARS THE SEAL AND SIGNATURE OF A DULY REGISTERED PROFESSIONAL

CHARLES W. JOYCE
ENGINEER-IN-RESPONSIBLE CHARGE
C33166
CALIFORNIA REGISTRATION NUMBER

REVISIONS

ZONE	REV.	DESCRIPTION	BY	DATE	APP.

PUMP STATION 2 PRE-DESIGN

SVCW Silicon Valley Clean Water

STRUCTURAL

PUMP STATION 2

SURGE AND EFFLUENT METER VAULT PLANS AND SECTIONS

FILENAME S-107-052.DWG
BC PROJECT NUMBER 142399
January 13, 2015
DRAWING NUMBER **S-107-052**
SHEET NUMBER 18 OF 67

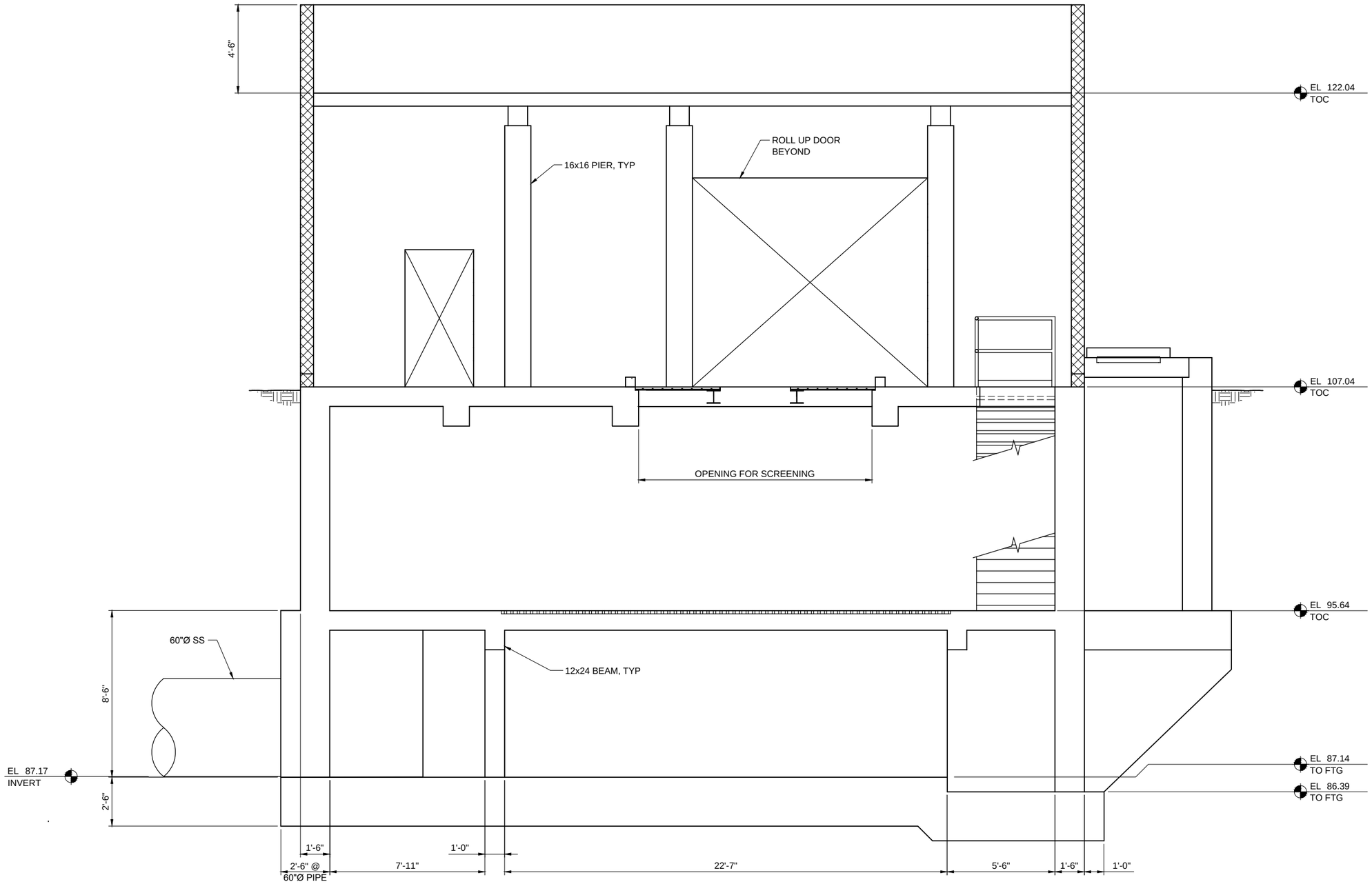

SECTION 1 S-101-052 1 S-102-052 1 S-103-052

SCALE: 3/8" = 1'-0"

Brown AND Caldwell

WALNUT CREEK, CALIFORNIA

SUBMITTED: _____ DATE: _____
PROJECT MANAGER

APPROVED: _____ DATE: _____
BROWN AND CALDWELL

LINE IS 2 INCHES AT FULL SIZE (IF NOT 2" - SCALE ACCORDINGLY)

SCALE: AS SHOWN

DESIGNED: ENGINEER
DRAWN: R. BLUMENSHINE
CHECKED: CHECKED
APPROVED: APPROVED

EXTERNAL REFERENCE FILES
142399-TB-redwood city.dwg
142399-MF-02RC-S-SCRN-LVL1-2D-plans.dwg
142399-MF-02RC-S-SCRN-LVL1-3D.dwg
142399-MF-02RC-S-SCRN-LVL2-3D.dwg

PRELIMINARY

THIS DRAWING IS NOT VALID FOR CONSTRUCTION PURPOSES UNLESS IT BEARS THE SEAL AND SIGNATURE OF A DULY REGISTERED PROFESSIONAL

CHARLES W. JOYCE
ENGINEER-IN-RESPONSIBLE CHARGE
C33166
CALIFORNIA REGISTRATION NUMBER

REVISIONS

ZONE	REV.	DESCRIPTION	BY	DATE	APP.

PUMP STATION 2 PRE-DESIGN

SVCW Silicon Valley Clean Water

STRUCTURAL

PUMP STATION 2

SCREENING BUILDING SECTIONS

FILENAME
S-301-052.DWG

BC PROJECT NUMBER
142399

January 13, 2015

DRAWING NUMBER
S-301-052

SHEET NUMBER
19 OF 67

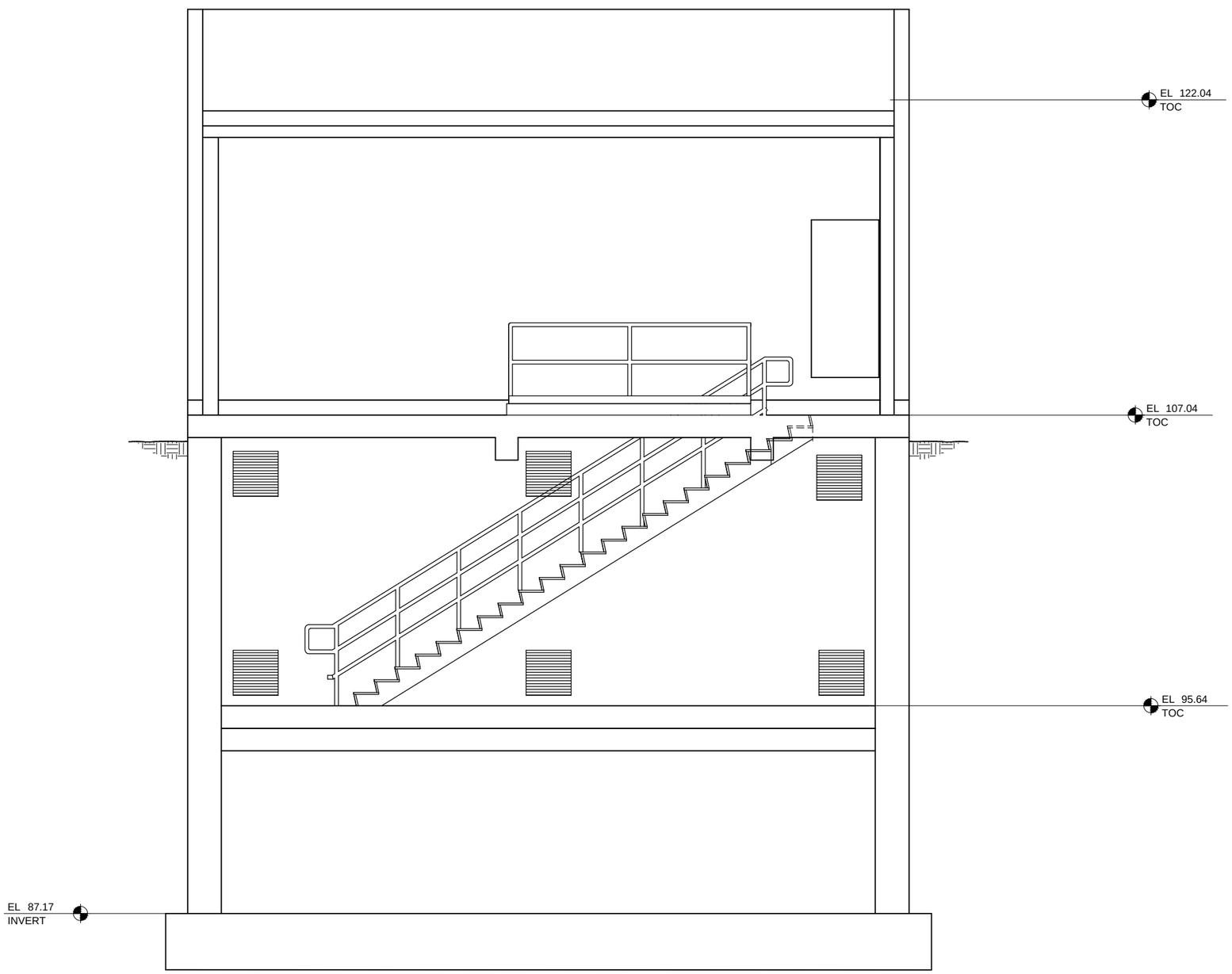

SECTION 2 S-101-052 2 S-102-052 2 S-103-052

SCALE: 3/8" = 1'-0"

Brown AND Caldwell

WALNUT CREEK, CALIFORNIA

SUBMITTED: _____ DATE: _____
PROJECT MANAGER

APPROVED: _____ DATE: _____
BROWN AND CALDWELL

LINE IS 2 INCHES AT FULL SIZE (IF NOT 2" - SCALE ACCORDINGLY)

SCALE: AS SHOWN

DESIGNED: ENGINEER
DRAWN: R. BLUMENSHINE
CHECKED: CHECKED
APPROVED: APPROVED

EXTERNAL REFERENCE FILES
142399-TB-redwood city.dwg
142399-MF-02RC-S-SCRN-LVL1-2D-plans.dwg
142399-MF-02RC-S-SCRN-LVL1-3D.dwg
142399-MF-02RC-S-SCRN-LVL2-3D.dwg

PRELIMINARY

THIS DRAWING IS NOT VALID FOR CONSTRUCTION PURPOSES UNLESS IT BEARS THE SEAL AND SIGNATURE OF A DULY REGISTERED PROFESSIONAL

CHARLES W. JOYCE
ENGINEER-IN-RESPONSIBLE CHARGE
C33166
CALIFORNIA REGISTRATION NUMBER

REVISIONS

ZONE	REV.	DESCRIPTION	BY	DATE	APP.

PUMP STATION 2 PRE-DESIGN

SVCW Silicon Valley Clean Water

STRUCTURAL

PUMP STATION 2

SCREENING BUILDING SECTION

FILENAME S-302-052.DWG
BC PROJECT NUMBER 142399
January 13, 2015
DRAWING NUMBER **S-302-052**
SHEET NUMBER 20 OF 67

GENERAL NOTES:

1. GENERAL NOTE ONE STARTS HERE .... MTEXT USED WITH LINE SPACING SET TO EXACT. SET TAB SPACING TO 0.3-INCHES.
2. GENERAL NOTE TEXT INSERTED ON LAYER S-ANNO.

KEY NOTES:

(XX) KEY NOTE ONE STARTS HERE .... KEY NOTE BUBBLES INSERTED ON LAYER S-ANNO-SYMB.

(YY) KEY NOTE TEXT INSERTED ON LAYER S-ANNO.

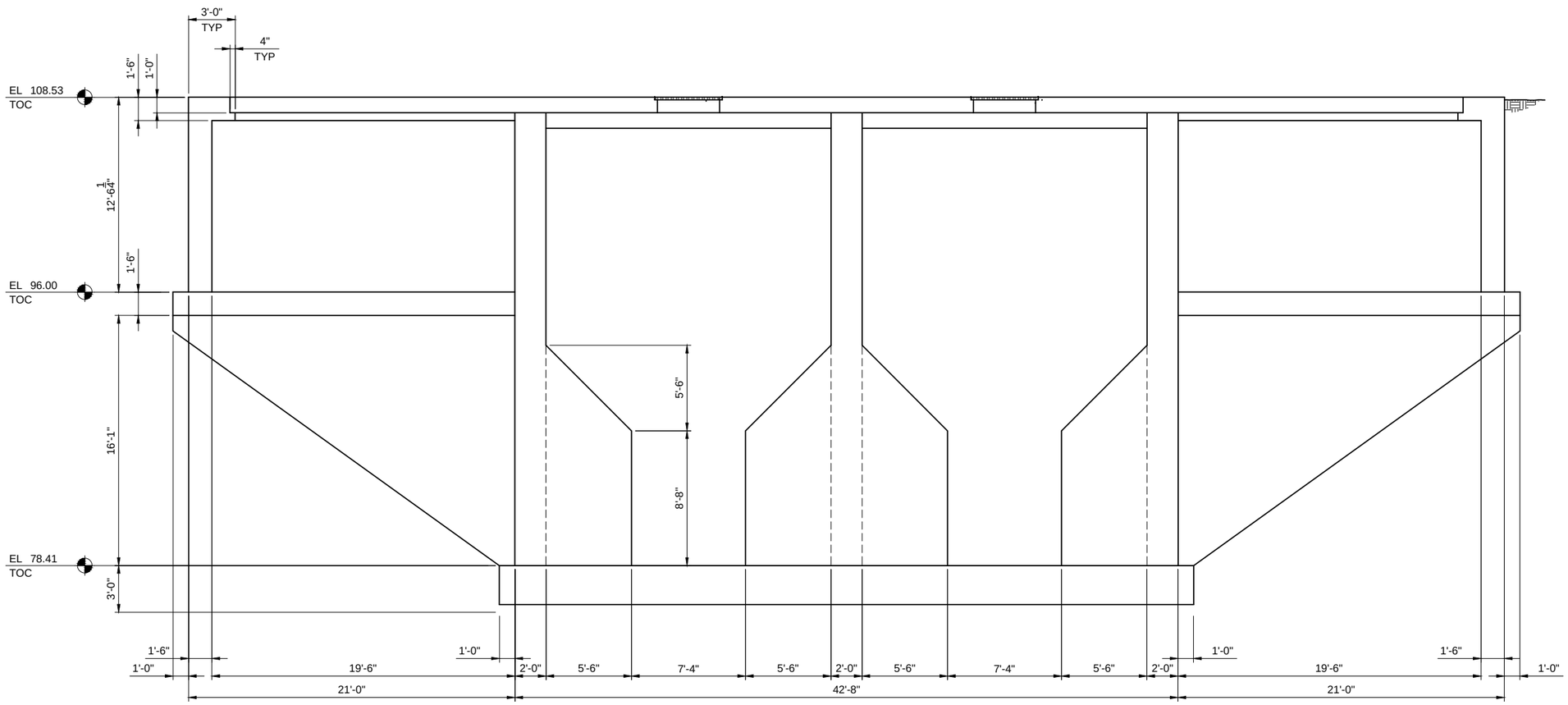

SECTION 1 S-104-052 1 S-105-052 1 S-106-052

1/4" = 1'-0"

Path: P:\142000\142399 - SBSA Pump Station Predesign\CADD\2-SHEETS\S-STRUCTURAL Filename: S-303-052.dwg Plot Date: January 13, 2015 - 12:31 PM CADD User: Burke, Fred

Brown AND Caldwell

WALNUT CREEK, CALIFORNIA

SUBMITTED: _____ DATE: _____
PROJECT MANAGER

APPROVED: _____ DATE: _____
BROWN AND CALDWELL

LINE IS 2 INCHES AT FULL SIZE (IF NOT 2" - SCALE ACCORDINGLY)

SCALE: AS SHOWN

DESIGNED: ENGINEER
DRAWN: R. BLUMENSHINE
CHECKED: CHECKED
APPROVED: APPROVED

EXTERNAL REFERENCE FILES
142399-TB-redwood city.dwg
142399-MF-02RC-S-NPS-LVL3-2D-plans.dwg
142399-MF-02RC-S-NPS-LVL1-3D.dwg
142399-MF-02RC-S-NPS-LVL2-3D.dwg
142399-MF-02RC-S-NPS-LVL3-3D.dwg

PRELIMINARY

THIS DRAWING IS NOT VALID FOR CONSTRUCTION PURPOSES UNLESS IT BEARS THE SEAL AND SIGNATURE OF A DULY REGISTERED PROFESSIONAL

CHARLES W. JOYCE
ENGINEER-IN-RESPONSIBLE CHARGE
C33166
CALIFORNIA REGISTRATION NUMBER

REVISIONS

ZONE	REV.	DESCRIPTION	BY	DATE	APP.

PUMP STATION 2 PRE-DESIGN

SVCW Silicon Valley Clean Water

STRUCTURAL

PUMP STATION 2

WET WELL AND VALVE VAULT SECTION

FILENAME S-303-052.DWG
BC PROJECT NUMBER 142399
January 13, 2015
DRAWING NUMBER **S-303-052**
SHEET NUMBER 21 OF 67

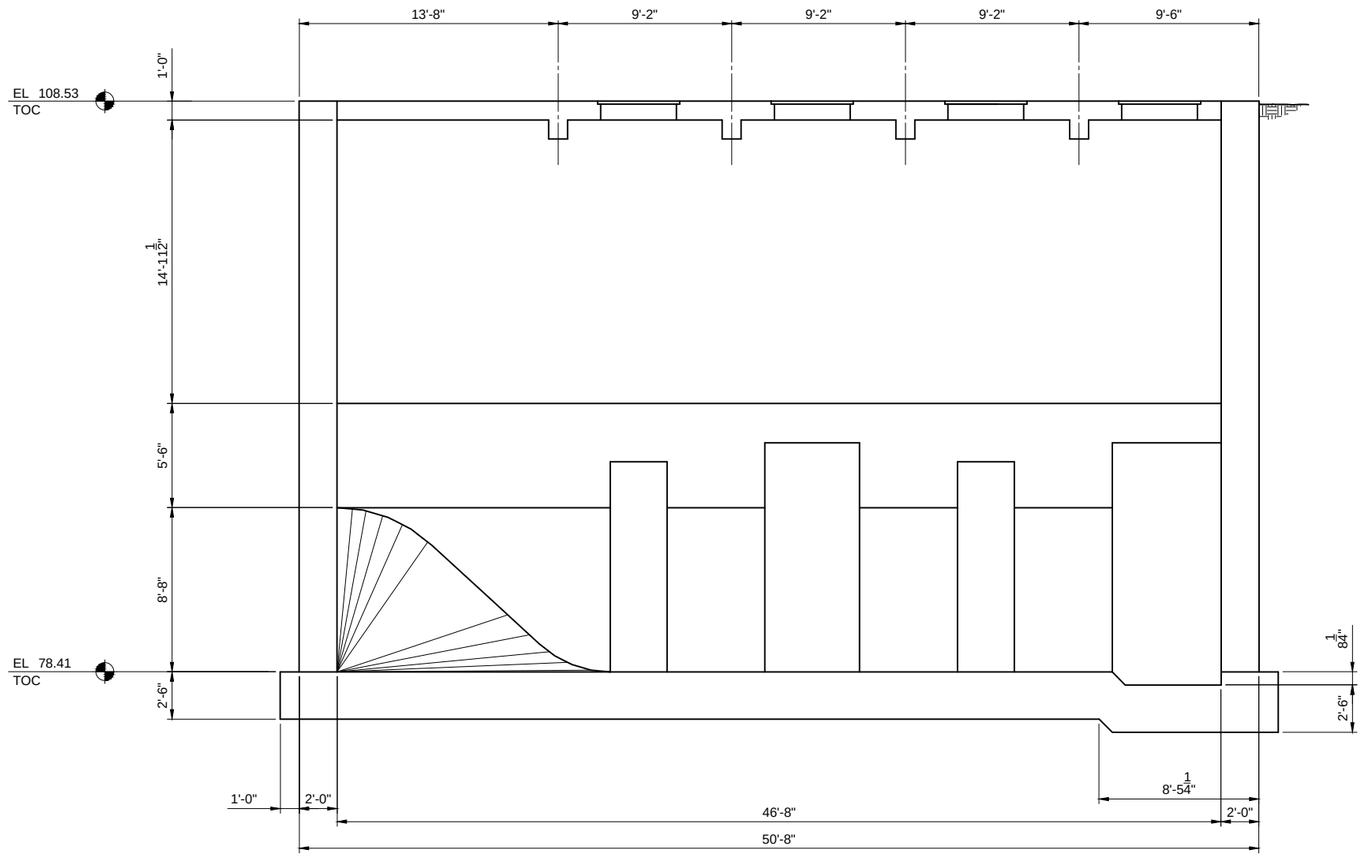

SECTION 2 S-104-052 2 S-105-052 2 S-106-052

1/4" = 1'-0"

Path: P:\142000\142399 - SBSA Pump Station Predesign\CADD\2-SHEETS\S-STRUCTURAL Filename: S-304-052.dwg Plot Date: January 13, 2015 - 12:31 PM CADD User: Burke, Fred

Brown AND Caldwell

WALNUT CREEK, CALIFORNIA

SUBMITTED: _____ DATE: _____
PROJECT MANAGER

APPROVED: _____ DATE: _____
BROWN AND CALDWELL

LINE IS 2 INCHES
AT FULL SIZE
(IF NOT 2" - SCALE ACCORDINGLY)

SCALE: AS SHOWN

DESIGNED: ENGINEER
DRAWN: R. BLUMENSHINE
CHECKED: CHECKED
APPROVED: APPROVED

EXTERNAL REFERENCE FILES
142399-TB-redwood city.dwg
142399-MF-02RC-S-NPS-LVL3-2D-plans.dwg
142399-MF-02RC-S-NPS-LVL1-3D.dwg
142399-MF-02RC-S-NPS-LVL2-3D.dwg
142399-MF-02RC-S-NPS-LVL3-3D.dwg

PRELIMINARY

THIS DRAWING IS NOT VALID FOR CONSTRUCTION PURPOSES UNLESS IT BEARS THE SEAL AND SIGNATURE OF A DULY REGISTERED PROFESSIONAL

CHARLES W. JOYCE
ENGINEER-IN-RESPONSIBLE CHARGE
C33166
CALIFORNIA REGISTRATION NUMBER

REVISIONS

ZONE	REV.	DESCRIPTION	BY	DATE	APP.

PUMP STATION 2 PRE-DESIGN

SVCW Silicon Valley Clean Water

STRUCTURAL

PUMP STATION 2

WET WELL AND VALVE VAULT SECTION

FILENAME
S-304-052.DWG

BC PROJECT NUMBER
142399

January 13, 2015

DRAWING NUMBER
S-304-052

SHEET NUMBER
22 OF 67

EQUIPMENT

- VFD — VARIABLE FREQUENCY DRIVE
- MECHANICAL BAR SCREEN
- MANUAL BAR SCREEN
- SCREENINGS WASHER COMPACTOR/ AGITATOR
- M — MOTOR
- PUMP, PROGRESSING CAVITY
- PUMP, CENTRIFUGAL
- PUMP, VERTICAL
- GENERATOR
- ENGINE
- PUMP, GEAR
- M — PUMP, SUBMERSIBLE
- BLOWER OR CENTRIFUGAL FAN
- SCREENINGS BIN
- HEAT EXCHANGER, SPIRAL TYPE
- BURNER, WASTE GAS
- COMPRESSOR, ROTARY SCREEN
- CHILLER
- ROTARY LOBE POSITIVE DISPLACEMENT BLOWER
- SILENCER
- TANK, NON-PRESSURE TYPE
- REDUCED PRESSURE BACKFLOW PREVENTER
- SLIDE GATE (NORMALLY CLOSED)
- SLIDE GATE (NORMALLY OPEN)
- SLUICE GATE (NORMALLY CLOSED)
- SLUICE GATE (NORMALLY OPEN)
- INLET AIR FILTER OR FILTER-SILENCER
- CHEMICAL FEEDER
- FINE BUBBLE AIR DIFFUSER HEADER
- COARSE BUBBLE AIR DIFFUSER HEADER
- NO — BUTTERFLY GATE (NORMALLY OPEN)
- NC — BUTTERFLY GATE (NORMALLY CLOSE)
- SAMPLE TAP
- SPRAYERS

PIPELINE DEVICES

- FLAME TRAP
- FLAME TRAP WITH THERMO SHUTOFF ASSEMBLY
- FLAME CHECK
- T — TRAP
- SEDIMENT TRAP
- DT — GAS DRIP TRAP
- SEPARATOR
- PIPELINE FILTER
- RUPTURE DISK (VACUUM RELIEF)
- RUPTURE DISK (PRESSURE RELIEF)
- AIR VENT
- AIR SEPARATOR
- EDUCTOR
- D — DRAIN
- DV — DRAIN VALVE
- CALIBRATION CHAMBER
- PULSATION DAMPENER
- SIGHT GLASS
- ROTAMETER
- ELASTOMER AND FABRIC EXPANSION JOINT
- MUD VALVE
- KNIFE GATE
- GLOBE VALVE (NORMALLY OPEN)
- GLOBE VALVE (NORMALLY CLOSED)
- REDUCER / INCREASER
- BALL VALVE (NORMALLY OPEN)
- BALL VALVE (NORMALLY CLOSED)
- PLUG VALVE (NORMALLY OPEN)
- PLUG VALVE (NORMALLY CLOSED)
- DIAPHRAGM VALVE (NORMALLY OPEN)
- DIAPHRAGM VALVE (NORMALLY CLOSED)
- NO — BUTTERFLY VALVE (NORMALLY OPEN)
- NC — BUTTERFLY VALVE (NORMALLY CLOSED)
- SWING CHECK VALVE
- BALL CHECK VALVE
- BALANCING COCK
- PNEUMATIC VALVE
- GATE VALVE (NORMALLY OPEN)
- GATE VALVE (NORMALLY CLOSED)
- S — SOLENOID VALVE
- THREE WAY VALVE
- NEEDLE VALVE
- EQUIPMENT CONNECTION FITTING
- FLEXIBLE TUBING
- PRESSURE AND VACUUM RELIEF VALVE
- VACUUM RELIEF VALVE
- PRESSURE RELIEF VALVE
- AUTOMATIC AIR VENT
- MANUAL AIR VENT
- STRAINER
- QUICK CONNECTOR
- CAP OR PLUG
- BLIND FLANGE
- SAMPLING AND FLUSHING CONNECTIONS
- FLOAT VALVE
- M — CHEMICAL INDUCTOR
- DAMPER
- AIR INTAKE FILTER SCREEN
- S — SOLENOID BALL VALVE
- FOOT VALVE

PROCESS AND SIGNAL CROSS REFERENCE SYSTEM

LINE CROSS REFERENCE SYMBOL LOCATION IDENTIFICATION LETTERS

FROM — TO

TO/FROM SYMBOL EXAMPLES

(I-601-052) I-602-052 (TO) — (I-602-052) I-602-052 (FROM)

DEFINES A LINE CONTINUING FROM DRAWING "(I-601-052)", TO DRAWING "(I-602-052)".

(I-601-052) I-602-052 (FROM) — (I-602-052) I-602-052 (TO)

DEFINES A LINE CONTINUING FROM DRAWING "(I-601-052)", TO DRAWING "(I-602-052)".

PROCESS LINES

- NEW PRIMARY PROCESS FLOW
- NEW SECONDARY PROCESS FLOW
- FUTURE
- EXISTING PROCESS FLOW, EQUIPMENT, OR SIGNAL PATH (SCREENED)
- NEW/EXISTING CONNECTIONS
- TEMPORARY PIPING

NOTES:

1. THIS DRAWING IS GENERAL IN NATURE. SOME SYMBOLS SHOWN HEREON MAY NOT BE USED ON THE CONTRACT DRAWINGS.
2. SEE DRAWING G003 FOR ABBREVIATIONS.
3. SEE DRAWING G001 FOR EQUIPMENT NUMBER PREFIXES, PIPING SYSTEM AND DESIGNATIONS SYSTEMS.
4. SYMBOLS ARE ARRANGED ON SPECIFIC DRAWINGS AND IN CATEGORIES FOR CONVENIENCE ONLY; SYMBOLS MAY BE USED ON ANY OF THE CONTRACT DRAWINGS.

Brown AND Caldwell
WALNUT CREEK, CALIFORNIA

SUBMITTED: _____ DATE: _____
PROJECT MANAGER
APPROVED: _____ DATE: _____
BROWN AND CALDWELL

LINE IS 2 INCHES AT FULL SIZE (IF NOT 2" - SCALE ACCORDINGLY)
SCALE: NO SCALE
DESIGNED: ENGINEER
DRAWN: RJM
CHECKED: CHECKED
APPROVED: APPROVED

EXTERNAL REFERENCE FILES
142399-MF-01-P0001dwg
142399-TB-redwood city.dwg

PRELIMINARY

THIS DRAWING IS NOT VALID FOR CONSTRUCTION PURPOSES UNLESS IT BEARS THE SEAL AND SIGNATURE OF A DULY REGISTERED PROFESSIONAL

CHARLES W. JOYCE
ENGINEER-IN-RESPONSIBLE CHARGE
C33166
CALIFORNIA REGISTRATION NUMBER

REVISIONS

ZONE	REV.	DESCRIPTION	BY	DATE	APP.

PUMP STATION 2 PRE-DESIGN

SVCW Silicon Valley Clean Water

PROCESS AND INSTRUMENTATION
PUMP STATION 2

PROCESS SYMBOLS

FILENAME I-001-052.DWG
BC PROJECT NUMBER 142399
January 13, 2015
DRAWING NUMBER **I-001-052**
SHEET NUMBER 23 OF 67

Path: P:\142000\142399 - SBSA Pump Station Predesign\CADD\2-SHEETS\P-PROCESS Filename: I-001-052.dwg Plot Date: January 13, 2015 - 12:32 PM CADD User: Burke, Fred

FUNCTIONAL IDENTIFICATION

MEASURED OR INITIATING VARIABLE	MODIFIER	READOUT OR PASSIVE FUNCTION	OUTPUT FUNCTION	MODIFIER
A ANALYSIS		ALARM		
B BURNER, COMBUSTION				
C CONDUCTIVITY			CONTROL	CLOSE
D DENSITY, SPECIFIC GRAVITY	DIFFERENTIAL			
E VOLTAGE		PRIMARY ELEMENT		
F FLOW RATE	RATIO			
G FIRE, SMOKE		GLASS		
H HAND				HIGH
I CURRENT (ELEC)		INDICATE		
J POWER	SCAN			
K TIME, TIME SCHEDULE	TIME RATE OF CHANGE		CONTROL STATION	
L LEVEL		LIGHT		LOW
M MOISTURE, HUMIDITY	MOMENTARY			MIDDLE, INTERMEDIATE
N EQUIPMENT STATUS				
O DISSOLVED OXYGEN		ORIFICE		OPEN
P PRESSURE, VACUUM		POINT (TEST) CONNECTION		
Q QUANTITY	INTEGRATE, TOTALIZE			
R RADIATION		RECORD		
S SPEED, FREQUENCY	SAFETY		SWITCH	
T TEMPERATURE			TRANSMIT	
U MULTIVARIABLE		MULTIFUNCTION	MULTIFUNCTION	MULTIFUNCTION
V VIBRATION, MECHANICAL ANALYSIS			VALVE, DAMPER, LOUVER	
W WEIGHT, FORCE, TORQUE		WELL		
X UNCLASSIFIED	X AXIS			
Y EVENT, STATE, OR PRESENCE	Y AXIS		RELAY, COMPUTE, CONVERT	
Z POSITION, DIMENSION	Z AXIS		DRIVER, ACTUATOR, FINAL CONTROL ELEMENT	

INSTRUMENT FUNCTION DESIGNATIONS

Σ	SUMMING
Δ	DIFFERENCE
± + −	BIAS
AVG OR Σ/n	AVERAGE
×	MULTIPLYING
÷	DIVIDING
√	SQUARE ROOT EXTRACTION
X^n OR $X^{1/n}$	EXPONENTIAL
f(x)	CHARACTERIZE
f(t)	TIME FUNCTION
1:1	BOOST AND ISOLATE
∀	VELOCITY LIMITER
>	HIGH SELECTING
⊳	HIGH LIMITING
<	LOW SELECTING
⊲	LOW LIMITING
REV	REVERSE ACTION
GAF	GAP ACTION FLOATING
S&H	SAMPLE AND HOLD
SRG	SPLIT-RANGING
OR	OR LOGIC

E/P , I/P (TYPICAL)	FOR INPUT/OUTPUT CONVERTERS USING FOLLOWING SIGNALS: E - VOLTS H - HYDRAULIC I - CURRENT O - ELECTROMAGNETIC OR SONIC P - PNEUMATIC R - RESISTANCE A - ANALOG B - BINARY D - DIGITAL F - FREQUENCY
% OR P	PROPORTIONAL CONTROL ACTION
−% OR −P	REVERSE PROPORTIONAL CONTROL ACTION
∫ OR I	INTEGRAL CONTROL ACTION
d/dt OR D	DERIVATIVE CONTROL ACTION
1−0	ON-OFF CONTROL ACTION
Δ1 −0	DIFFERENTIAL GAP CONTROL ACTION
1:3 , 1:2 (TYPICAL)	GAIN
3:1 , 2:1 (TYPICAL)	ATTENUATE

PRIMARY ELEMENT SYMBOLS

- PITOT TUBE
- VARIABLE AREA FLOW INDICATOR (ROTAMETER) (FI)
- DIAPHRAGM SEAL
- IN-LINE PRESSURE SENSOR
- MAGNETIC FLOWMETER (M)
- SONIC FLOWMETER (DOPPLER OR TRANSIT TIME)
- THERMAL FLOW ELEMENT (T)
- FLOAT LEVEL ELEMENT
- ULTRASONIC LEVEL ELEMENT
- BUBBLER LEVEL TUBE

FUNCTIONAL IDENTIFICATION

P D IT 35 01 A

- SUFFIX - USED ONLY WHEN TWO OR MORE INSTRUMENTS WOULD OTHERWISE HAVE THE SAME TAG NUMBER
- LOOP NUMBER (SEE NOTE)
- PROCESS AREA
- SUCCEEDING LETTERS; READOUT OR PASSIVE FUNCTION AND/OR OUTPUT FUNCTION WITH MODIFIER WHEN REQUIRED
- MODIFIER LETTER, WHEN REQUIRED
- MEASURED OR INITIATING VARIABLE LETTER

FUNCTIONAL IDENTIFICATION SEE TABLE THIS DRAWING

EXAMPLE:

PDIT 01A

NUMBER (PROCESS AREA NUMBER EXCLUDED)

NOTE:

TWO DIGITS FOR UNIQUE INSTRUMENT OR THREE DIGITS FOR MECHANICAL EQUIPMENT RELATED INSTRUMENT.

INSTRUMENT AND FUNCTIONAL SYMBOLS

- FIELD MOUNTED INSTRUMENT
- FACE MOUNTED INSTRUMENT ON MAIN PANEL, OPERATOR ACCESSIBLE
- INSTRUMENT MOUNTED ON/IN MAIN PANEL, OPERATOR INACCESSIBLE
- FACE MOUNTED INSTRUMENT ON FIELD PANEL, OPERATOR ACCESSIBLE
- INSTRUMENT MOUNTED ON/IN FIELD PANEL, OPERATOR INACCESSIBLE
- MULTIFUNCTION INSTRUMENT WITH SHARED HARDWARE (USED FOR "VIDEO DISPLAY SYSTEMS")
- COMPUTER FUNCTION
- E34C — CONTROL DIAGRAM NUMBER (PREFIXED BY "01")
- INTERLOCKING OR SEQUENTIAL CONTROL FUNCTION
- PROGRAMMABLE LOGIC CONTROL FUNCTION
- STATUS INDICATION LAMP

I/O SYMBOLS

- ANALOG OUTPUT
- ANALOG INPUT
- OR — DISCRETE OUTPUT
- DISCRETE INPUT

TYPICAL INSTRUMENT IDENTIFICATION

OUTPUT — LP2 — Y 1:1 — FIT 01A — INPUT

- PANEL LOCATION *
- FUNCTIONAL IDENTIFICATION
- OPERATING FUNCTION *
- BASIC INSTRUMENT
- SUFFIX *
- NUMBER (PROCESS AREA NUMBER EXCLUDED)

* OPTIONAL

ABBREVIATIONS

ANALYTICAL FUNCTIONS

CL2	RESIDUAL CHLORINE
DO	DISSOLVED OXYGEN
ORP	OXYGEN REDUCTION POTENTIAL
pH	pH
SS	SUSPENDED SOLIDS
O2	OXYGEN
H2S	HYDROGEN SULFIDE
SD	SOLIDS DENSITY

SWITCHING FUNCTIONS

B/W	BACKWASH	MO	MANUAL OVERRIDE
C	CLOSE	O	OPEN
E	EMULSION	OC	OPEN-CLOSE
EC	EMERGENCY CLOSE	OCA	OPEN-CLOSE-AUTO
ES	EMERGENCY STOP	OL	OVERLOAD
ESD	EMERGENCY SHUTDOWN	OO	ON-OFF
FR	FORWARD-REVERSE	OOC	OPEN-OFF-CLOSE
FS	FAST-SLOW	OSC	OPEN-STOP-CLOSE
HA	HAND-AUTO	PV	PROCESS VARIABLE
HOA	HAND-OFF-AUTO	RDY	READY
JOR	JOG-OFF-REMOTE	REM	REMOTE
LL	LEAD-LAG	RST	RESET
LR	LOCAL REMOTE	SP	SETPOINT
M	MANNICH	SRT	SOLIDS RESIDENCE TIME
MA	MANUAL-AUTO	SS	START-STOP
		UON	UNLESS OTHERWISE NOTED

INSTRUMENT SIGNAL SYMBOLS

- INSTRUMENT SUPPLY, PROCESS TAPS
- PNEUMATIC SIGNAL
- ELECTRIC SIGNAL (MISCELLANEOUS)
- CAPILLARY TUBE OR FILLED SYSTEM
- ELECTROMAGNETIC OR SONIC SIGNAL (GUIDED)
- ELECTROMAGNETIC OR SONIC SIGNAL (UNGUIDED)
- SOFTWARE OR DATA LINK
- MECHANICAL LINK
- HYDRAULIC
- ES — ELECTRIC POWER SUPPLY 120 VAC 60 HZ UON
- SA — SERVICE AIR SUPPLY
- IA — INSTRUMENT QUALITY AIR SUPPLY
- 2W — WATER SUPPLY 1W, 2W, 3W, ETC

MISCELLANEOUS LINE TYPES

- VENDOR PACKAGE BOUNDARY
- J — J — J — ELECTRICAL POWER

MISCELLANEOUS SYMBOLS

- P — PURGE OR FLUSHING DEVICE
- R — RESET FOR LATCH-TYPE OPERATOR
- C — SEAL WATER CONTROL UNIT

NOTES:

1. THIS DRAWING IS GENERAL IN NATURE. SOME SYMBOLS AND IDENTIFICATIONS SHOWN HEREON MAY NOT BE USED ON THE CONTRACT DRAWINGS.
2. SEE DRAWING G003 FOR ABBREVIATIONS.
3. SEE DRAWING G004 FOR EQUIPMENT NUMBER PREFIXES, PIPING SYSTEM SYMBOLS AND DESIGNATION SYSTEM.
4. SEE DRAWINGS P001, P002, E001, AND E002 FOR ADDITIONAL SYMBOLS
5. SYMBOLS ARE ARRANGED ON SPECIFIC DRAWINGS AND IN CATEGORIES FOR CONVENIENCE ONLY; SYMBOLS MAY BE USED ON ANY OF THE CONTRACT DRAWINGS.
6. GAGES SHOWN WITHOUT TAG NUMBERS ON PID SHALL BE PROVIDED AS SPECIFIED IN SECTION 15095.

Brown AND Caldwell
WALNUT CREEK, CALIFORNIA

SUBMITTED: _____ DATE: _____
PROJECT MANAGER
APPROVED: _____ DATE: _____
BROWN AND CALDWELL

LINE IS 2 INCHES AT FULL SIZE (IF NOT 2" - SCALE ACCORDINGLY)
SCALE: NO SCALE
DESIGNED: RJM
DRAWN: RJM
CHECKED: CHECKED
APPROVED: APPROVED

EXTERNAL REFERENCE FILES
142399-MF-01-P0002.dwg
142399-TB-redwood city.dwg

PRELIMINARY

THIS DRAWING IS NOT VALID FOR CONSTRUCTION PURPOSES UNLESS IT BEARS THE SEAL AND SIGNATURE OF A DULY REGISTERED PROFESSIONAL

CHARLES W. JOYCE
ENGINEER-IN-RESPONSIBLE CHARGE
C33166
CALIFORNIA REGISTRATION NUMBER

REVISIONS

ZONE	REV.	DESCRIPTION	BY	DATE	APP.

PUMP STATION 2 PRE-DESIGN

SVCW Silicon Valley Clean Water

PROCESS AND INSTRUMENTATION
PUMP STATION 2

INSTRUMENTATION SYMBOLS AND IDENTIFICATION SYSTEMS

FILENAME I-002-052.DWG
BC PROJECT NUMBER 142399
January 13, 2015
DRAWING NUMBER **I-002-052**
SHEET NUMBER 24 OF 67

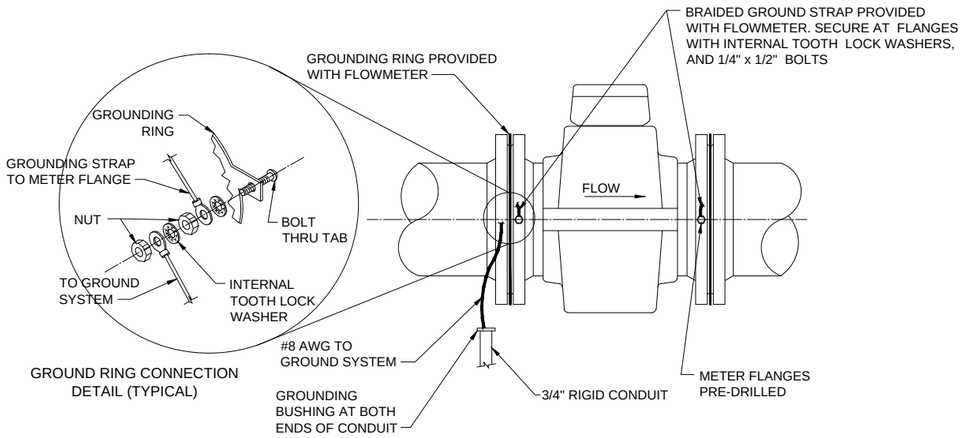

GROUND RING CONNECTION DETAIL (TYPICAL)

FLOW TRANSMITTER

DETAIL A/VAR

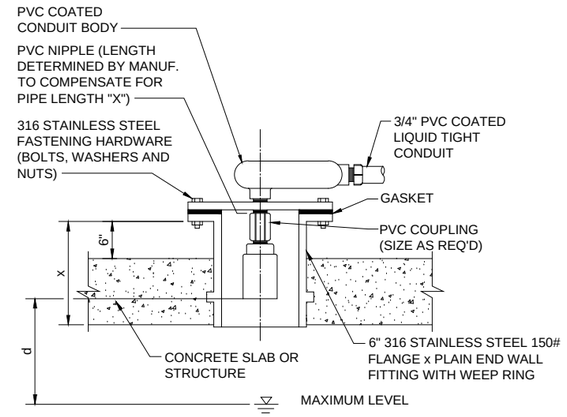

NOTES:

1. DISTANCE FROM TRANSDUCER SENSOR HEAD TO MAXIMUM LIQUID LEVEL: (d) AS REQUIRED BY TRANSDUCER MANUFACTURER FOR PROPER LEVEL MEASUREMENT, MINIMUM 10 INCHES.
2. PROVIDE AN UNOBSTRUCTED SOUND PATH PERPENDICULAR TO THE LIQUID SURFACE, PER TRANSDUCER MANUFACTURER INSTRUCTIONS.
3. COORDINATE FLANGE UNIT AND STAND PIPE WITH CONCRETE INSTALLATION WORK.

ULTRASONIC TRANSMITTER

DETAIL B/VAR

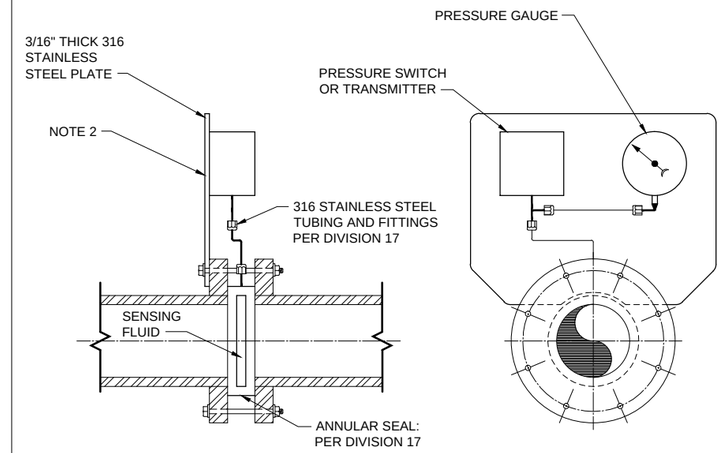

NOTES:

1. MOUNT EQUIPMENT WITH STAINLESS STEEL HARDWARE
2. SIZE PLATE AS REQUIRED FOR DEVICES

PRESSURE TRANSMITTER

DETAIL C/VAR

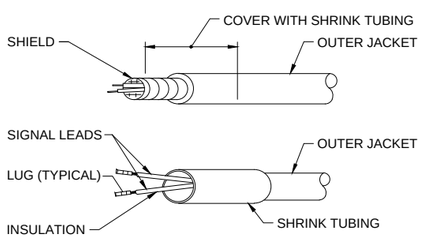

INSTRUMENT TERMINATION

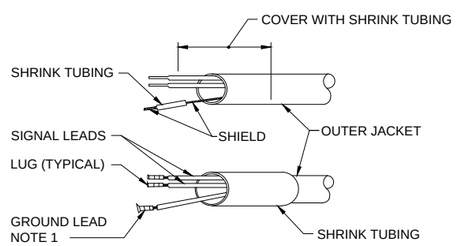

PANEL TERMINATION

NOTE:
1. GROUND SHIELD AT PANEL NOT AT INSTRUMENT.

SHIELDED CABLE TERMINATION

DETAIL D/VAR

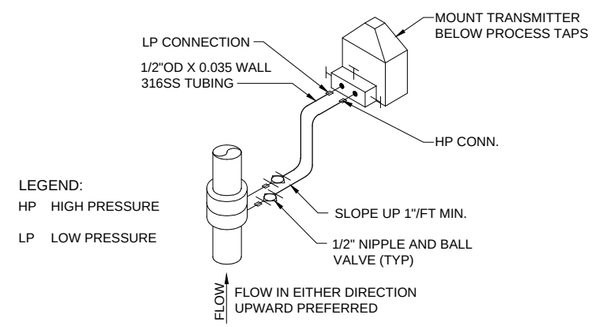

LEGEND:
HP HIGH PRESSURE
LP LOW PRESSURE

FLOW TRANSMITTER AND DIFFERENTIAL PRESSURE ELEMENT FOR VERTICAL LINE FOR AIR OR GAS

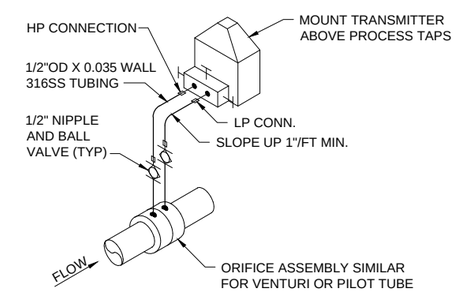

FLOW TRANSMITTER AND DIFFERENTIAL PRESSURE ELEMENT FOR HORIZONTAL LINE FOR AIR OR GAS

NOTES:

1. DIFFERENTIAL PRESSURE TYPE OF FLOW MEASUREMENT
2. MANIFOLD PER SPECIFICATION DIVISION 17

DIFFERENTIAL PRESSURE TRANSMITTER

DETAIL E/VAR

Brown AND Caldwell

WALNUT CREEK, CALIFORNIA

SUBMITTED: _____ DATE: _____
PROJECT MANAGER

APPROVED: _____ DATE: _____
BROWN AND CALDWELL

LINE IS 2 INCHES AT FULL SIZE (IF NOT 2" - SCALE ACCORDINGLY)

SCALE: NO SCALE
DESIGNED: ENGINEER
DRAWN: DRAFTER
CHECKED: CHECKED
APPROVED: APPROVED

EXTERNAL REFERENCE FILES
142399-TB-redwood city.dwg

PRELIMINARY

THIS DRAWING IS NOT VALID FOR CONSTRUCTION PURPOSES UNLESS IT BEARS THE SEAL AND SIGNATURE OF A DULY REGISTERED PROFESSIONAL

CHARLES W. JOYCE
ENGINEER-IN-RESPONSIBLE CHARGE
C33166
CALIFORNIA REGISTRATION NUMBER

REVISIONS

ZONE	REV.	DESCRIPTION	BY	DATE	APP.

PUMP STATION 2 PRE-DESIGN

SVCW Silicon Valley Clean Water

PROCESS AND INSTRUMENTATION

PUMP STATION 2

INSTRUMENTATION DETAILS 1

FILENAME I-003-052.DWG
BC PROJECT NUMBER 142399
January 13, 2015
DRAWING NUMBER **I-003-052**
SHEET NUMBER 25 OF 67

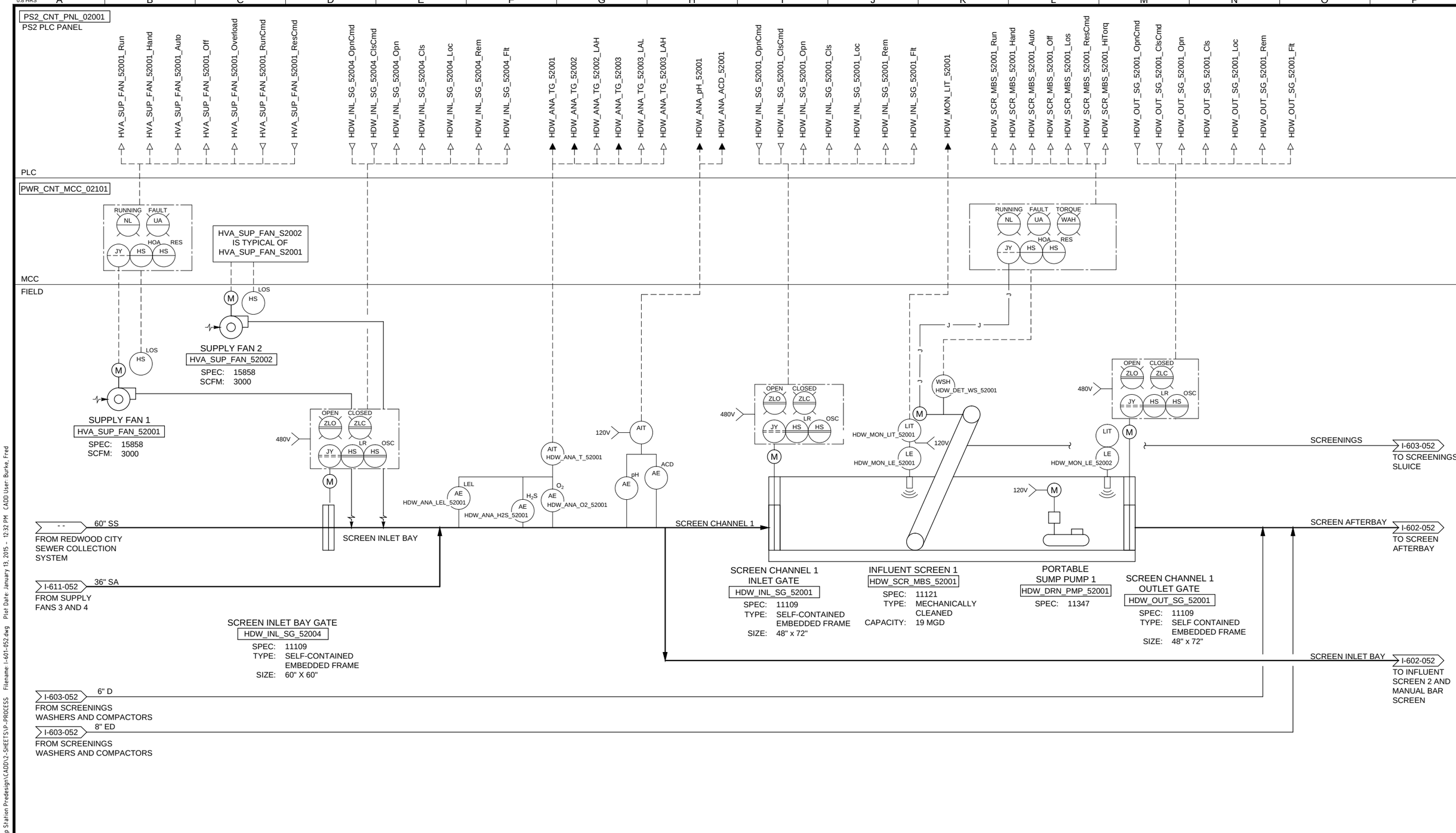

Brown AND Caldwell

WALNUT CREEK, CALIFORNIA

SUBMITTED: _____ DATE: _____
PROJECT MANAGER

APPROVED: _____ DATE: _____
BROWN AND CALDWELL

LINE IS 2 INCHES AT FULL SIZE (IF NOT 2" - SCALE ACCORDINGLY)

SCALE: NO SCALE

DESIGNED: ENGINEER
DRAWN: DRAFTER
CHECKED: CHECKED
APPROVED: APPROVED

EXTERNAL REFERENCE FILES
142399-TB-redwood city.dwg
142399-PnID-T7-MF-01-D001.dwg

PRELIMINARY

THIS DRAWING IS NOT VALID FOR CONSTRUCTION PURPOSES UNLESS IT BEARS THE SEAL AND SIGNATURE OF A DULY REGISTERED PROFESSIONAL

CHARLES W. JOYCE
ENGINEER-IN-RESPONSIBLE CHARGE
C33166
CALIFORNIA REGISTRATION NUMBER

REVISIONS

ZONE	REV.	DESCRIPTION	BY	DATE	APP.

PUMP STATION 2 PRE-DESIGN

SVCW Silicon Valley Clean Water

PROCESS AND INSTRUMENTATION

PUMP STATION 2

INFLUENT SCREEN 1

FILENAME
I-601-052.DWG

BC PROJECT NUMBER
142399

January 13, 2015

DRAWING NUMBER
I-601-052

SHEET NUMBER
26 OF 67

Path: P:\142000\142399 - SBSA Pump Station Predesign\CADD\2-SHEETS\P-PROCESS Filename: I-601-052.dwg Plot Date: January 13, 2015 - 12:32 PM CADD User: Burke, Fred

Acad Ver. 19.0S (LMS TECH)
0.8 HRS

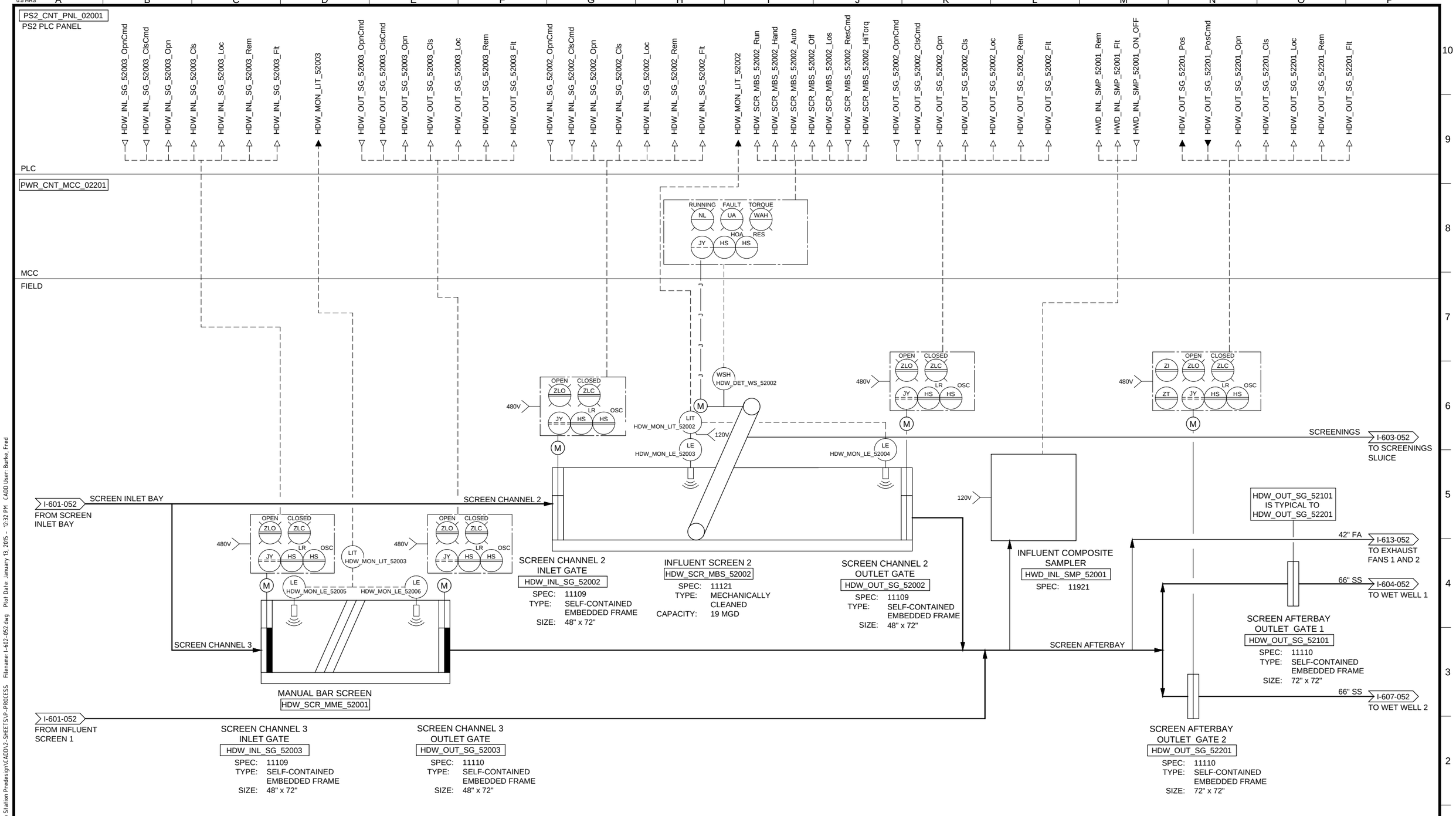

Brown AND Caldwell
WALNUT CREEK, CALIFORNIA

SUBMITTED: _____ DATE: _____
PROJECT MANAGER
APPROVED: _____ DATE: _____
BROWN AND CALDWELL

LINE IS 2 INCHES AT FULL SIZE (IF NOT 2" - SCALE ACCORDINGLY)
SCALE: NO SCALE
DESIGNED: ENGINEER
DRAWN: DRAFTER
CHECKED: CHECKED
APPROVED: APPROVED

EXTERNAL REFERENCE FILES
142399-PnID-17-MF-01-D001.dwg
142399-TB-redwood city.dwg

PRELIMINARY

THIS DRAWING IS NOT VALID FOR CONSTRUCTION PURPOSES UNLESS IT BEARS THE SEAL AND SIGNATURE OF A DULY REGISTERED PROFESSIONAL

CHARLES W. JOYCE
ENGINEER-IN-RESPONSIBLE CHARGE
C33166
CALIFORNIA REGISTRATION NUMBER

REVISIONS

ZONE	REV.	DESCRIPTION	BY	DATE	APP.

PUMP STATION 2 PRE-DESIGN

SVCW Silicon Valley Clean Water

PROCESS AND INSTRUMENTATION
PUMP STATION 2

INFLUENT SCREEN 2 AND MANUAL BAR SCREEN

FILENAME I-602-052.DWG
BC PROJECT NUMBER 142399
January 13, 2015
DRAWING NUMBER **I-602-052**
SHEET NUMBER 27 OF 67

PS2_CNT_PNL_02001
PS2 PLC PANEL

HDW_SCR_WC_52001_Run
HDW_SCR_WC_52001_Hand
HDW_SCR_WC_52001_Auto
HDW_SCR_WC_52001_Off
HDW_SCR_WC_52001_Los
HDW_SCR_WC_52001_ResCmd
HDW_SCR_WC_52001_RunCmd
HDW_SCR_WC_52001_HiTorq

PLC

FIELD

CONTROL PANEL
HDW_SCR_LCP_52001

I-601-052 SCREENINGS
FROM INFLUENT
SCREEN 1

I-602-052 SCREENINGS
FROM INFLUENT
SCREEN 2

SCREENING SLUICE

SCREENING SLUICE

120V
S
1" RCW
1" RCW
LE
M
4" ED
HS
LOS
M
8" ED

WASHER
COMPACTOR 1
HDW_SCR_WC_52001
SPEC: 11123
HP: 5

SCREENINGS BIN

6" D
I-601-052
TO SCREEN
AFTERBAY

8" ED
I-601-052
TO SCREEN
AFTERBAY

Brown AND Caldwell
WALNUT CREEK, CALIFORNIA

SUBMITTED: _____ DATE: _____
PROJECT MANAGER
APPROVED: _____ DATE: _____
BROWN AND CALDWELL

LINE IS 2 INCHES
AT FULL SIZE
(IF NOT 2" - SCALE ACCORDINGLY)

SCALE: NO SCALE
DESIGNED: ENGINEER
DRAWN: DRAFTER
CHECKED: CHECKED
APPROVED: APPROVED

EXTERNAL REFERENCE FILES
142399-PnID-17-MF-01-D001.dwg
142399-TB-redwood city.dwg

PRELIMINARY

THIS DRAWING IS NOT VALID FOR CONSTRUCTION PURPOSES UNLESS IT BEARS THE SEAL AND SIGNATURE OF A DULY REGISTERED PROFESSIONAL

CHARLES W. JOYCE
ENGINEER-IN-RESPONSIBLE CHARGE
C33166
CALIFORNIA REGISTRATION NUMBER

REVISIONS

ZONE	REV.	DESCRIPTION	BY	DATE	APP.

PUMP STATION 2 PRE-DESIGN

SVCW
Silicon Valley Clean Water

PROCESS AND INSTRUMENTATION
PUMP STATION 2

SCREENING WASHERS AND COMPACTORS

FILENAME
I-603-052.DWG
BC PROJECT NUMBER
142399
January 13, 2015
DRAWING NUMBER
I-603-052
SHEET NUMBER
28 OF 67

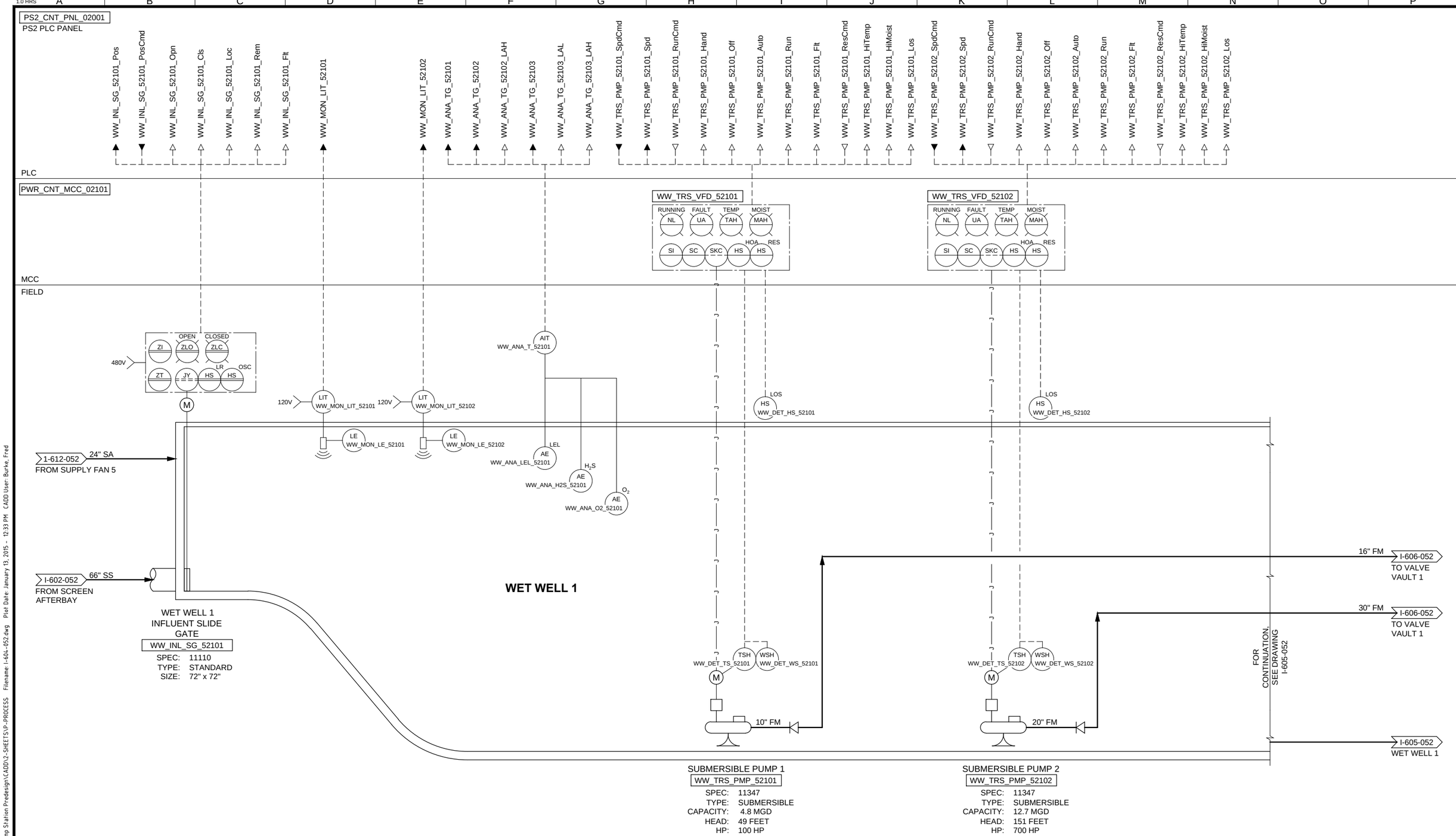

Path: P:\142000\142399 - SBSA Pump Station Predesign\CADD\2-SHEETS\P-PROCESS Filename: I-604-052.dwg Plot Date: January 13, 2015 - 12:33 PM CADD User: Burke, Fred

Brown AND Caldwell

WALNUT CREEK, CALIFORNIA

SUBMITTED: _____ DATE: _____
PROJECT MANAGER

APPROVED: _____ DATE: _____
BROWN AND CALDWELL

LINE IS 2 INCHES
AT FULL SIZE
(IF NOT 2" - SCALE ACCORDINGLY)

SCALE: NO SCALE
DESIGNED: G/B
DRAWN: GS
CHECKED: AH
APPROVED: TB

EXTERNAL REFERENCE FILES
142399-PnID-17-MF-01-D001dwg
142399-TB-redwood city.dwg

PRELIMINARY

THIS DRAWING IS NOT VALID FOR CONSTRUCTION PURPOSES UNLESS IT BEARS THE SEAL AND SIGNATURE OF A DULY REGISTERED PROFESSIONAL

CHARLES W. JOYCE
ENGINEER-IN-RESPONSIBLE CHARGE
C33166
CALIFORNIA REGISTRATION NUMBER

REVISIONS

ZONE	REV.	DESCRIPTION	BY	DATE	APP.

PUMP STATION 2 PRE-DESIGN

SVCW
Silicon Valley Clean Water

PROCESS AND INSTRUMENTATION

PUMP STATION 2

WET WELL 1 PUMP 1 AND PUMP 2

FILENAME
I-604-052.DWG

BC PROJECT NUMBER
142399

January 13, 2015

DRAWING NUMBER
I-604-052

SHEET NUMBER
29 OF 67

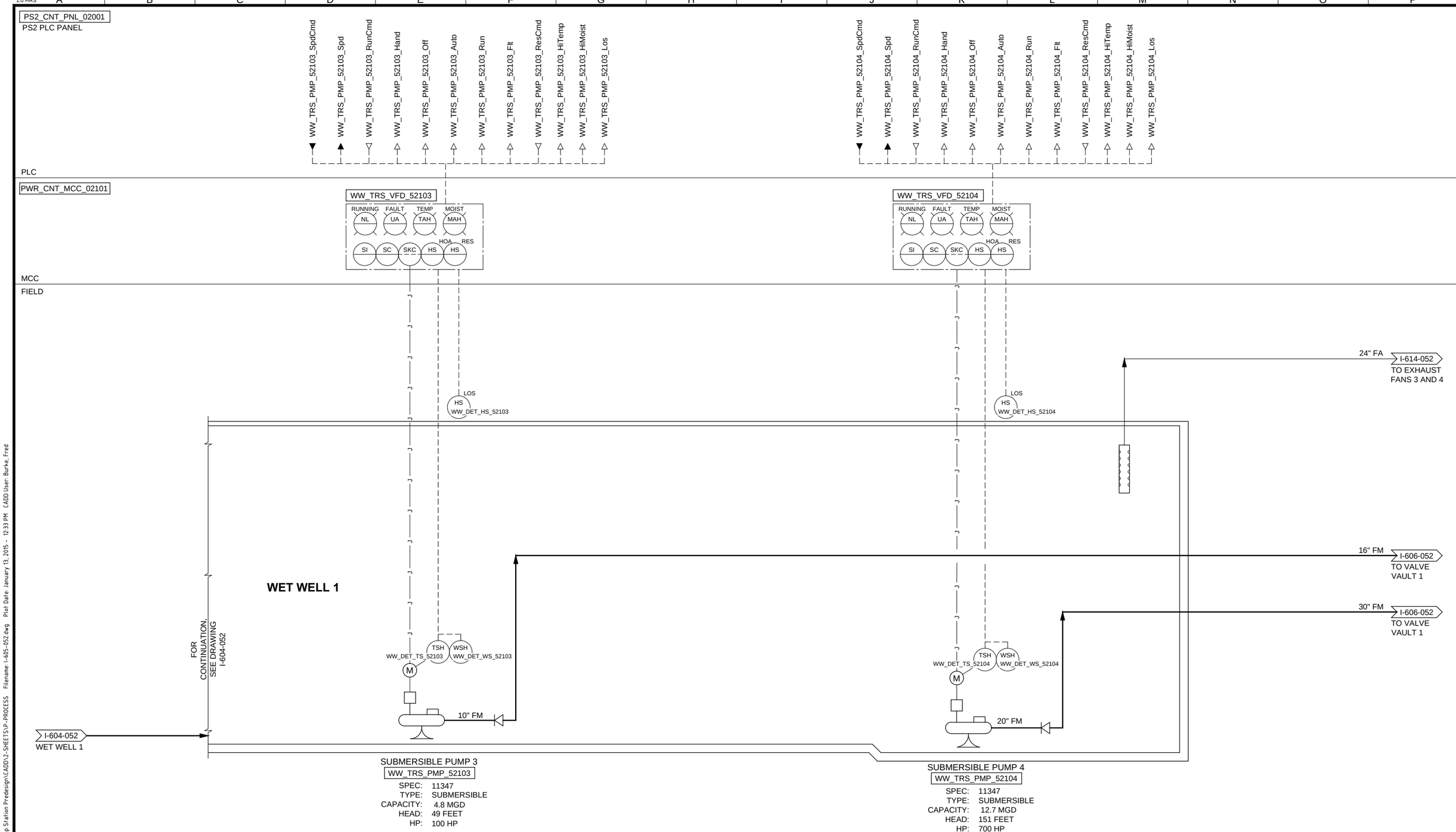

Brown AND Caldwell

WALNUT CREEK, CALIFORNIA

SUBMITTED: _____ DATE: _____
PROJECT MANAGER

APPROVED: _____ DATE: _____
BROWN AND CALDWELL

LINE IS 2 INCHES AT FULL SIZE (IF NOT 2" - SCALE ACCORDINGLY)

SCALE: NO SCALE
DESIGNED: G/B
DRAWN: GS
CHECKED: AH
APPROVED: TB

EXTERNAL REFERENCE FILES
142399-PnID-17-MF-01-D001.dwg
142399-TB-redwood city.dwg

PRELIMINARY

THIS DRAWING IS NOT VALID FOR CONSTRUCTION PURPOSES UNLESS IT BEARS THE SEAL AND SIGNATURE OF A DULY REGISTERED PROFESSIONAL

CHARLES W. JOYCE
ENGINEER-IN-RESPONSIBLE CHARGE
C33166
CALIFORNIA REGISTRATION NUMBER

REVISIONS

ZONE	REV.	DESCRIPTION	BY	DATE	APP.

PUMP STATION 2 PRE-DESIGN

SVCW Silicon Valley Clean Water

PROCESS AND INSTRUMENTATION

PUMP STATION 2

WET WELL 1 PUMP 3 AND PUMP 4

FILENAME
I-605-052.DWG

BC PROJECT NUMBER
142399

January 13, 2015

DRAWING NUMBER
I-605-052

SHEET NUMBER
30 OF 67

PS2_CNT_PNL_02001
PS2 PLC PANEL

WW_MON_ZO_52101_Opn
WW_MON_ZO_52102_Opn
WW_MON_ZO_52103_Opn
WW_MON_ZO_52104_Opn
WW_MON_PIT_52101

PLC
FIELD

I-604-052 16" FM FROM PUMP 1
I-604-052 30" FM FROM PUMP 2
I-605-052 16" FM FROM PUMP 3
I-605-052 30" FM FROM PUMP 4

ZSO WW_MON_ZO_52101
WW_DIS_VLV_52101 1" D
ZSO WW_MON_ZO_52102
WW_DIS_VLV_52102 1" D
ZSO WW_MON_ZO_52103
WW_DIS_VLV_52103 1" D
ZSO WW_MON_ZO_52104
WW_DIS_VLV_52104 1" D

PI WW_DIS_PI_52101
PE WW_MON_PE_52101
WW_ISL_VLV_52101
PI WW_DIS_PI_52102
PE WW_MON_PE_52102
WW_ISL_VLV_52102
PI WW_DIS_PI_52103
PE WW_MON_PE_52103
WW_ISL_VLV_52103
PI WW_DIS_PI_52104
PE WW_MON_PE_52104
WW_ISL_VLV_52104

VALVE VAULT 1

PIT WW_MON_PIT_52101
PE

30" FM I-609-052 TO VALVE VAULT 2

4" D -- TO DRAINAGE

Path: P:\142000\142399 - SBSA Pump Station Predesign\CADD\2-SHEETS\P-PROCESS Filename: I-606-052.dwg Plot Date: January 13, 2015 - 12:33 PM CADD User: Burke, Fred

Brown AND Caldwell
WALNUT CREEK, CALIFORNIA

SUBMITTED: _____ DATE: _____
PROJECT MANAGER
APPROVED: _____ DATE: _____
BROWN AND CALDWELL

LINE IS 2 INCHES AT FULL SIZE (IF NOT 2" - SCALE ACCORDINGLY)
SCALE: NO SCALE
DESIGNED: G/B
DRAWN: GS
CHECKED: AH
APPROVED: TB

EXTERNAL REFERENCE FILES
142399-PnID-T7-MF-01-D001.dwg
142399-TB-redwood city.dwg

PRELIMINARY

THIS DRAWING IS NOT VALID FOR CONSTRUCTION PURPOSES UNLESS IT BEARS THE SEAL AND SIGNATURE OF A DULY REGISTERED PROFESSIONAL

CHARLES W. JOYCE
ENGINEER-IN-RESPONSIBLE CHARGE
C33166
CALIFORNIA REGISTRATION NUMBER

REVISIONS

ZONE	REV.	DESCRIPTION	BY	DATE	APP.

PUMP STATION 2 PRE-DESIGN

SVCW Silicon Valley Clean Water

PROCESS AND INSTRUMENTATION
PUMP STATION 2

WET WELL 1 VALVE VAULT 1

FILENAME I-606-052.DWG
BC PROJECT NUMBER 142399
January 13, 2015
DRAWING NUMBER **I-606-052**
SHEET NUMBER 31 OF 67

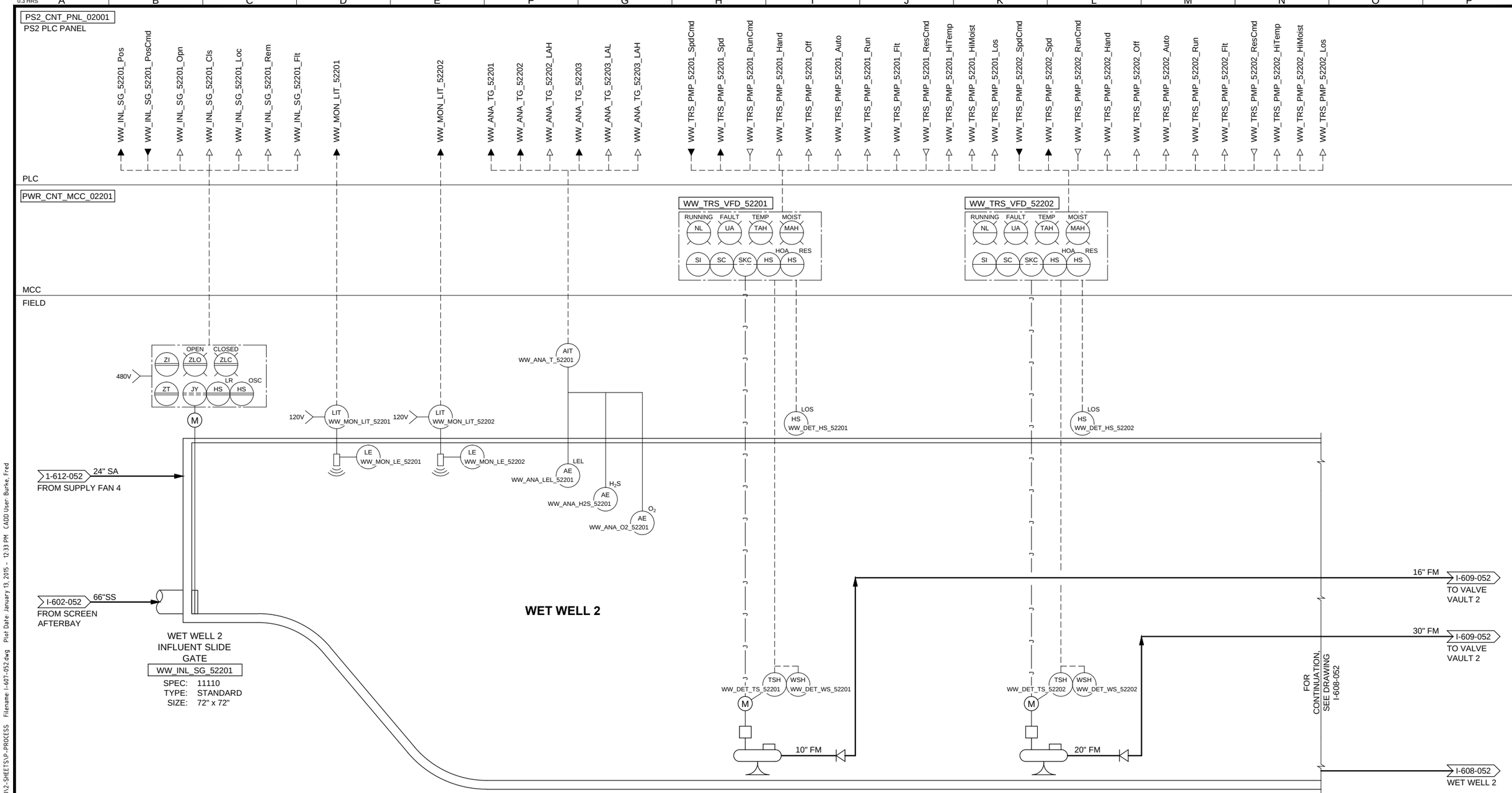

Brown AND Caldwell

WALNUT CREEK, CALIFORNIA

SUBMITTED: _____ DATE: _____
PROJECT MANAGER

APPROVED: _____ DATE: _____
BROWN AND CALDWELL

LINE IS 2 INCHES AT FULL SIZE (IF NOT 2" - SCALE ACCORDINGLY)

SCALE: NO SCALE

DESIGNED: G/B
DRAWN: GS
CHECKED: AH
APPROVED: TB

EXTERNAL REFERENCE FILES
142399-PnID-T7-MF-01-D001.dwg
142399-TB-redwood city.dwg

PRELIMINARY

THIS DRAWING IS NOT VALID FOR CONSTRUCTION PURPOSES UNLESS IT BEARS THE SEAL AND SIGNATURE OF A DULY REGISTERED PROFESSIONAL

CHARLES W. JOYCE
ENGINEER-IN-RESPONSIBLE CHARGE
C33166
CALIFORNIA REGISTRATION NUMBER

REVISIONS

ZONE	REV.	DESCRIPTION	BY	DATE	APP.

PUMP STATION 2 PRE-DESIGN

SVCW Silicon Valley Clean Water

PROCESS AND INSTRUMENTATION

PUMP STATION 2

WET WELL 2 PUMP 5 AND PUMP 6

FILENAME
I-607-052.DWG

BC PROJECT NUMBER
142399

January 13, 2015

DRAWING NUMBER
I-607-052

SHEET NUMBER
32 OF 67

Path: P:\142000\142399 - SBSA Pump Station Predesign\CADD\2-SHEETS\P-PROCESS Filename: I-607-052.dwg Plot Date: January 13, 2015 - 12:33 PM CADD User: Burke, Fred

Acad Ver. 19.0S (LMS TECH)
0.3 HRS

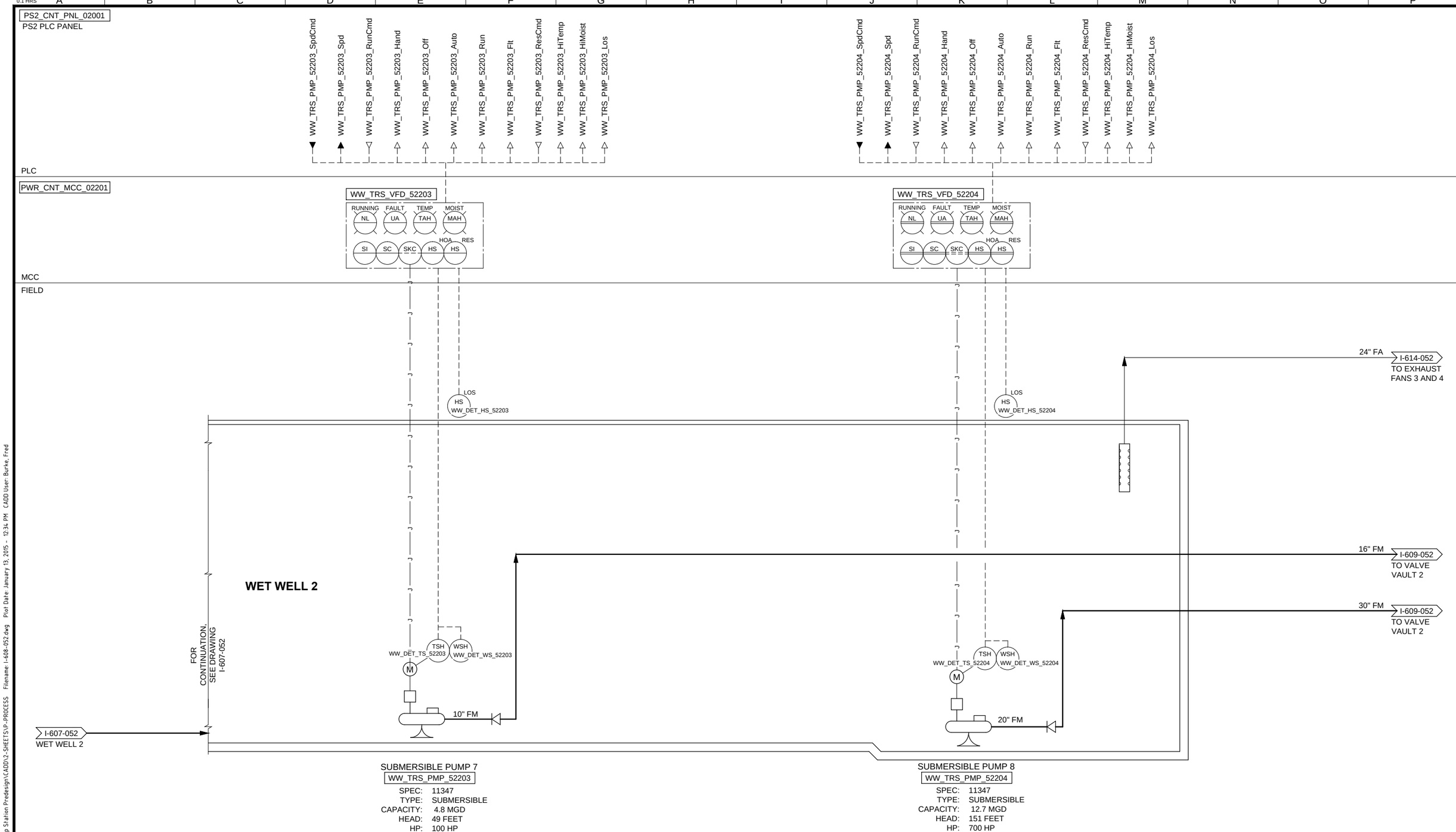

Brown AND Caldwell
WALNUT CREEK, CALIFORNIA

SUBMITTED: _____ DATE: _____
PROJECT MANAGER
APPROVED: _____ DATE: _____
BROWN AND CALDWELL

LINE IS 2 INCHES AT FULL SIZE (IF NOT 2" - SCALE ACCORDINGLY)
SCALE: NO SCALE
DESIGNED: G/B
DRAWN: GS
CHECKED: AH
APPROVED: TB

EXTERNAL REFERENCE FILES
142399-PnID-T1-MF-01-D001.dwg
142399-TB-redwood city.dwg

PRELIMINARY

THIS DRAWING IS NOT VALID FOR CONSTRUCTION PURPOSES UNLESS IT BEARS THE SEAL AND SIGNATURE OF A DULY REGISTERED PROFESSIONAL

CHARLES W. JOYCE
ENGINEER-IN-RESPONSIBLE CHARGE
C33166
CALIFORNIA REGISTRATION NUMBER

REVISIONS

ZONE	REV.	DESCRIPTION	BY	DATE	APP.

PUMP STATION 2 PRE-DESIGN

SVCW Silicon Valley Clean Water

PROCESS AND INSTRUMENTATION
PUMP STATION 2

WET WELL 2 PUMP 7 AND PUMP 8

FILENAME
I-608-052.DWG
BC PROJECT NUMBER
142399
January 13, 2015
DRAWING NUMBER
I-608-052
SHEET NUMBER
33 OF 67

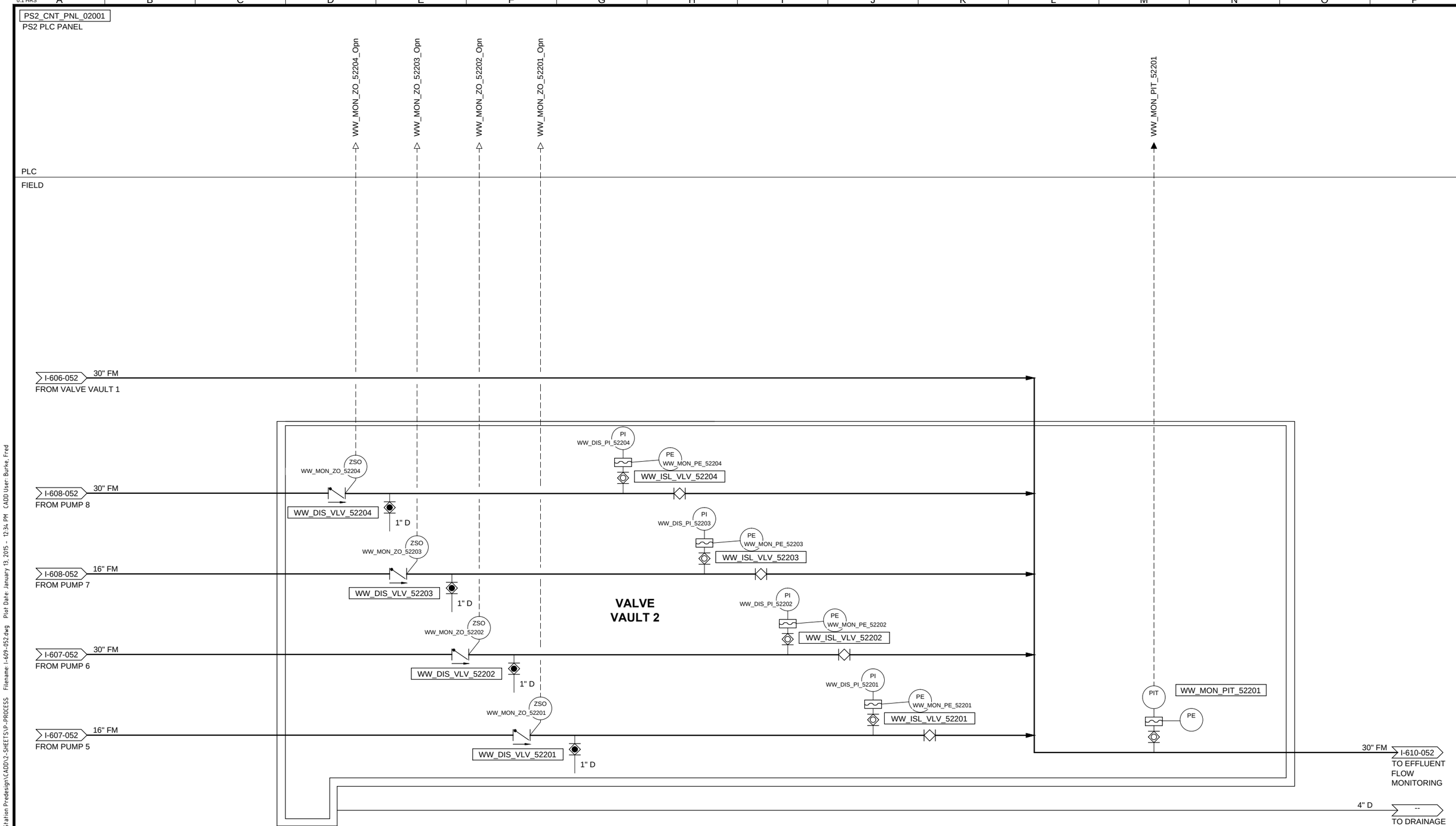

Brown AND Caldwell
WALNUT CREEK, CALIFORNIA

SUBMITTED: _____ DATE: _____
PROJECT MANAGER
APPROVED: _____ DATE: _____
BROWN AND CALDWELL

LINE IS 2 INCHES AT FULL SIZE (IF NOT 2" - SCALE ACCORDINGLY)
SCALE: NO SCALE
DESIGNED: G/B
DRAWN: GS
CHECKED: AH
APPROVED: TB

EXTERNAL REFERENCE FILES
142399-PnID-17-MF-01-D001dwg
142399-TB-redwood city.dwg

PRELIMINARY

THIS DRAWING IS NOT VALID FOR CONSTRUCTION PURPOSES UNLESS IT BEARS THE SEAL AND SIGNATURE OF A DULY REGISTERED PROFESSIONAL

CHARLES W. JOYCE
ENGINEER-IN-RESPONSIBLE CHARGE
C33166
CALIFORNIA REGISTRATION NUMBER

REVISIONS

ZONE	REV.	DESCRIPTION	BY	DATE	APP.

PUMP STATION 2 PRE-DESIGN

SVCW Silicon Valley Clean Water

PROCESS AND INSTRUMENTATION
PUMP STATION 2

WET WELL 2 VALVE VAULT 2

FILENAME
I-609-052.DWG
BC PROJECT NUMBER
142399
January 13, 2015
DRAWING NUMBER
I-609-052
SHEET NUMBER
34 OF 67

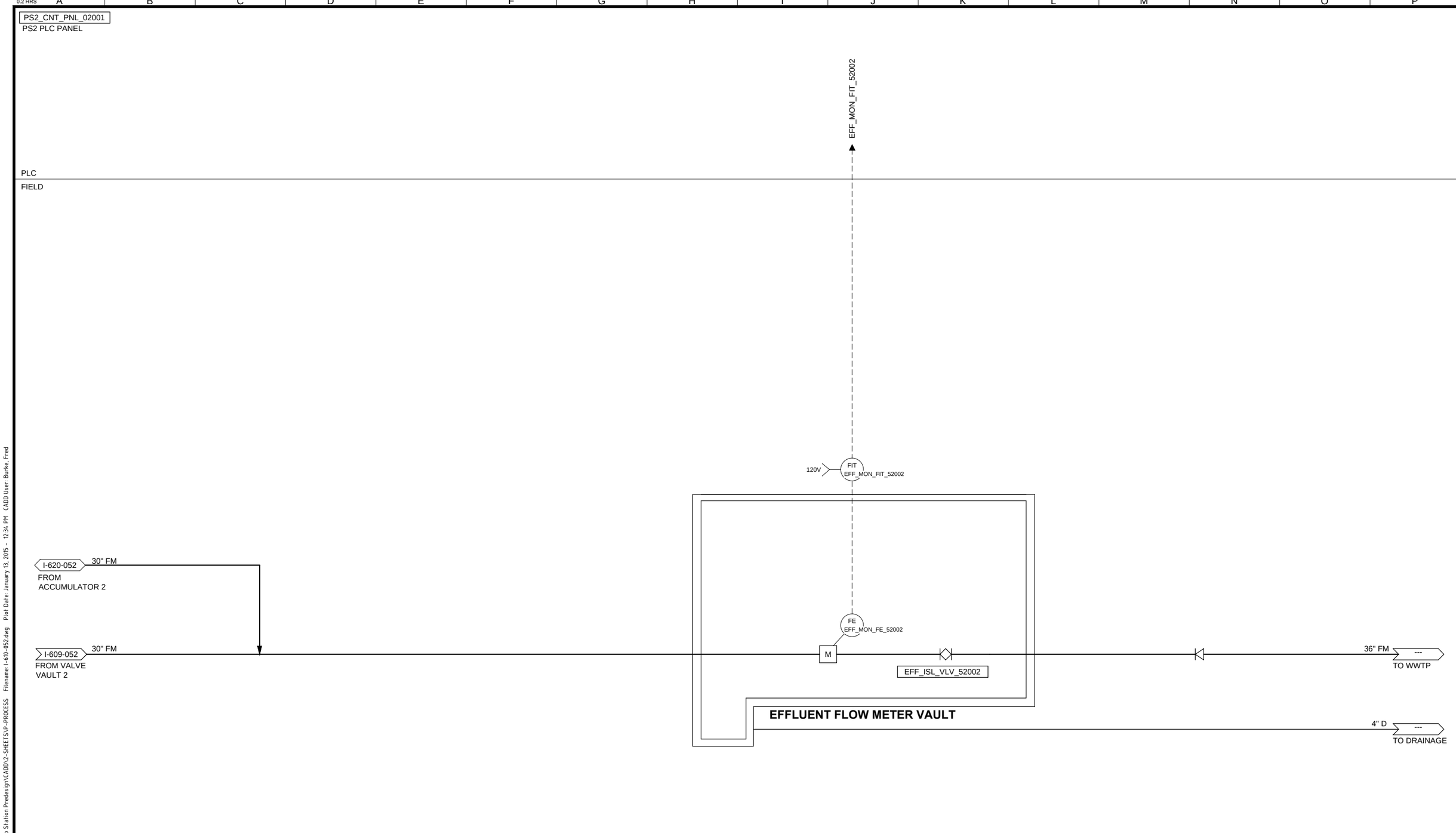

Brown AND Caldwell

WALNUT CREEK, CALIFORNIA

SUBMITTED: _____ DATE: _____
PROJECT MANAGER

APPROVED: _____ DATE: _____
BROWN AND CALDWELL

LINE IS 2 INCHES AT FULL SIZE (IF NOT 2" - SCALE ACCORDINGLY)

SCALE: NO SCALE

DESIGNED: ENGINEER
DRAWN: DRAFTER
CHECKED: CHECKED
APPROVED: APPROVED

EXTERNAL REFERENCE FILES
142399-PnID-17-MF-01-D001.dwg
142399-TB-redwood city.dwg

PRELIMINARY

THIS DRAWING IS NOT VALID FOR CONSTRUCTION PURPOSES UNLESS IT BEARS THE SEAL AND SIGNATURE OF A DULY REGISTERED PROFESSIONAL

CHARLES W. JOYCE
ENGINEER-IN-RESPONSIBLE CHARGE
C33166
CALIFORNIA REGISTRATION NUMBER

REVISIONS

ZONE	REV.	DESCRIPTION	BY	DATE	APP.

PUMP STATION 2 PRE-DESIGN

SVCW Silicon Valley Clean Water

PROCESS AND INSTRUMENTATION

PUMP STATION 2

EFFLUENT FLOW MONITORING

FILENAME
I-610-052.DWG

BC PROJECT NUMBER
142399

January 13, 2015

DRAWING NUMBER
I-610-052

SHEET NUMBER
35 OF 67

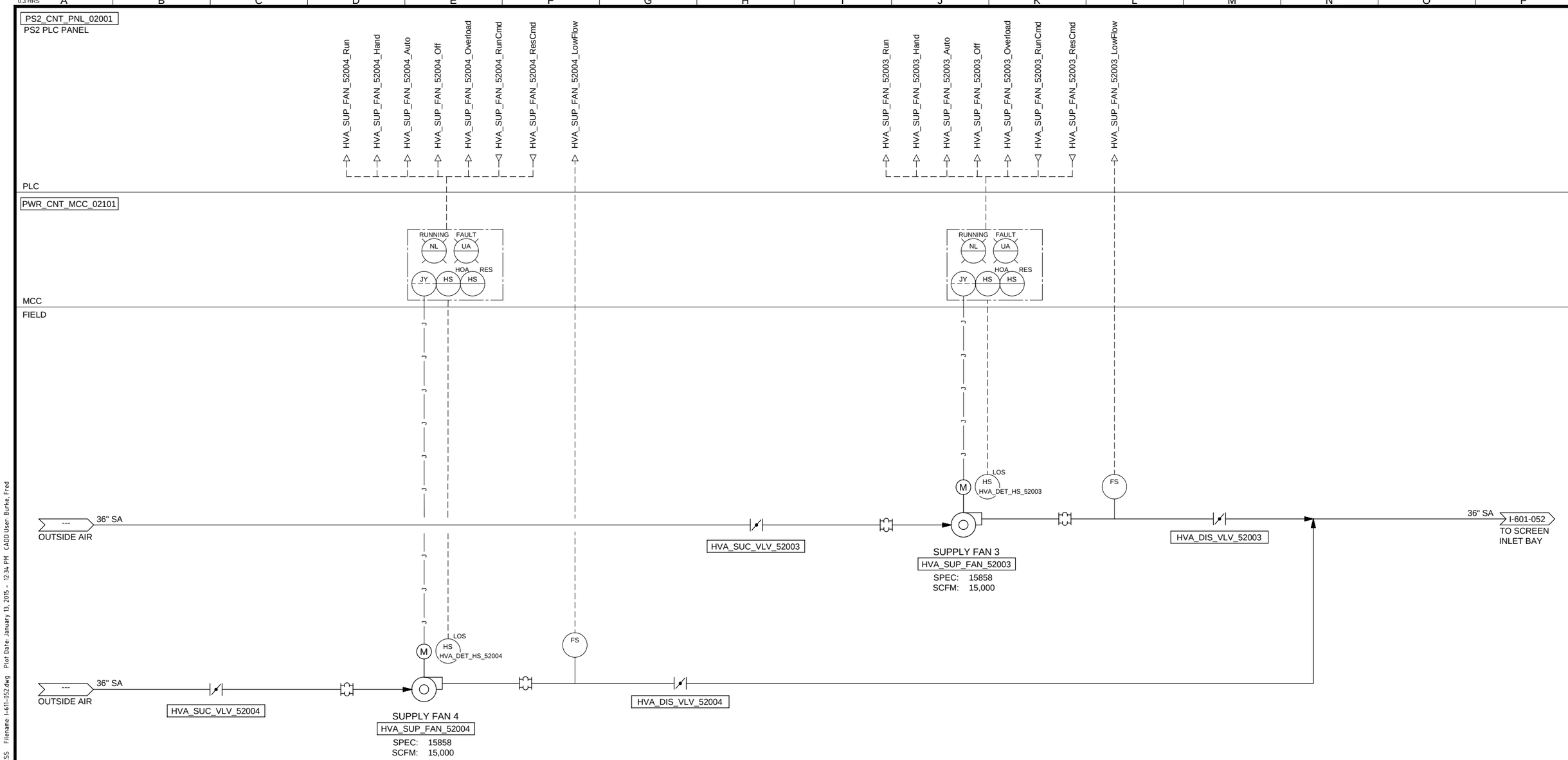

Path: P:\142000\142399 - SBSA Pump Station Predesign\CADD\2-SHEETS\P-PROCESS Filename: I-611-052.dwg Plot Date: January 13, 2015 - 12:34 PM CADD User: Burke, Fred

Brown AND Caldwell

WALNUT CREEK, CALIFORNIA

SUBMITTED: _____ DATE: _____
PROJECT MANAGER

APPROVED: _____ DATE: _____
BROWN AND CALDWELL

LINE IS 2 INCHES AT FULL SIZE (IF NOT 2" - SCALE ACCORDINGLY)

SCALE: NO SCALE
DESIGNED: ENGINEER
DRAWN: DRAFTER
CHECKED: CHECKED
APPROVED: APPROVED

EXTERNAL REFERENCE FILES
142399-PnID-17-MF-01-D001.dwg
142399-TB-redwood city.dwg

PRELIMINARY

THIS DRAWING IS NOT VALID FOR CONSTRUCTION PURPOSES UNLESS IT BEARS THE SEAL AND SIGNATURE OF A DULY REGISTERED PROFESSIONAL

CHARLES W. JOYCE
ENGINEER-IN-RESPONSIBLE CHARGE
C33166
CALIFORNIA REGISTRATION NUMBER

REVISIONS

ZONE	REV.	DESCRIPTION	BY	DATE	APP.

PUMP STATION 2 PRE-DESIGN

SVCW Silicon Valley Clean Water

PROCESS AND INSTRUMENTATION

PUMP STATION 2

SUPPLY FANS 3 AND 4

FILENAME
I-611-052.DWG

BC PROJECT NUMBER
142399

January 13, 2015

DRAWING NUMBER
I-611-052

SHEET NUMBER
36 OF 67

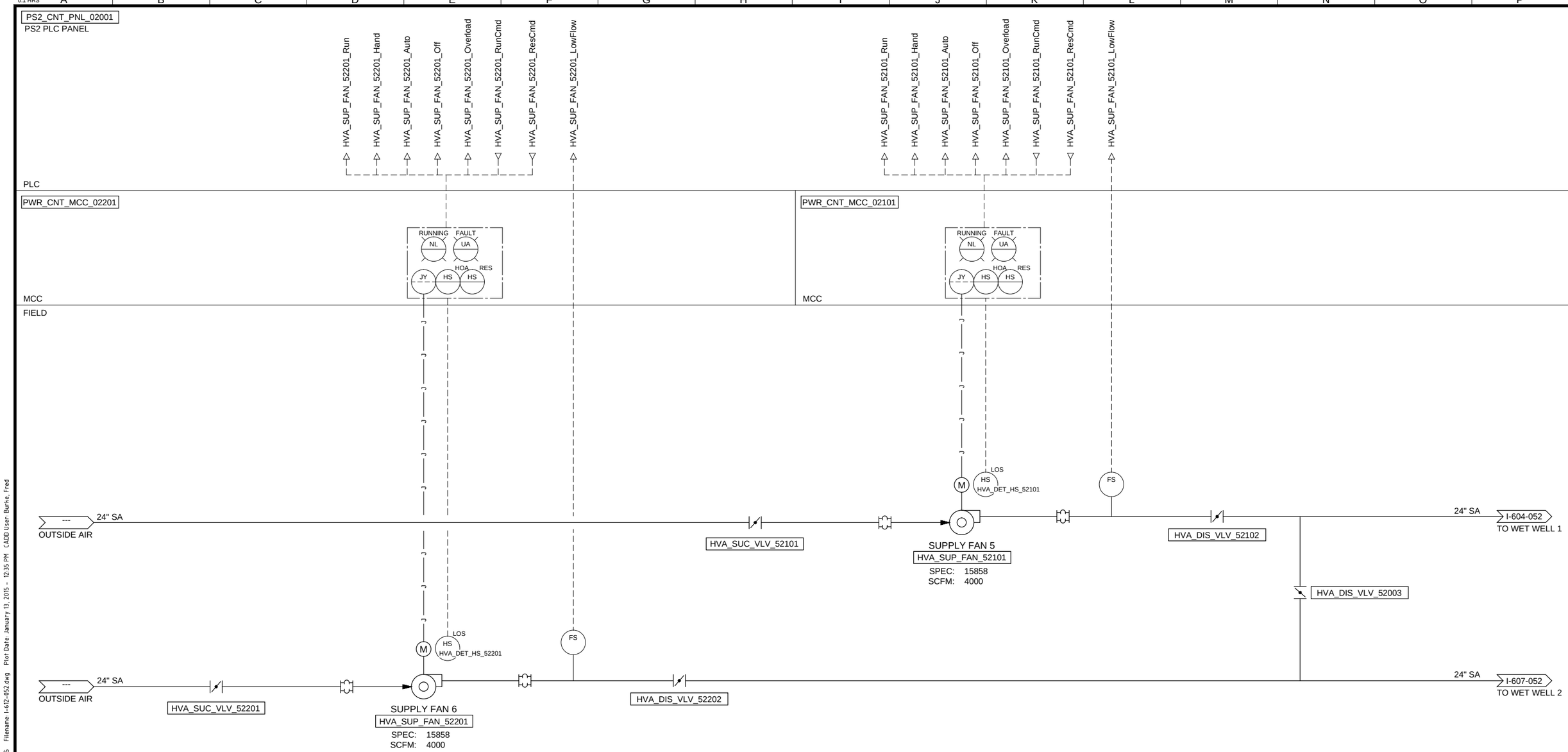

Brown AND Caldwell
WALNUT CREEK, CALIFORNIA

SUBMITTED: _____ DATE: _____
PROJECT MANAGER
APPROVED: _____ DATE: _____
BROWN AND CALDWELL

LINE IS 2 INCHES AT FULL SIZE (IF NOT 2" - SCALE ACCORDINGLY)
SCALE: NO SCALE
DESIGNED: ENGINEER
DRAWN: DRAFTER
CHECKED: CHECKED
APPROVED: APPROVED

EXTERNAL REFERENCE FILES
142399-PnID-17-MF-01-D001.dwg
142399-TB-redwood city.dwg

PRELIMINARY

THIS DRAWING IS NOT VALID FOR CONSTRUCTION PURPOSES UNLESS IT BEARS THE SEAL AND SIGNATURE OF A DULY REGISTERED PROFESSIONAL

CHARLES W. JOYCE
ENGINEER-IN-RESPONSIBLE CHARGE
C33166
CALIFORNIA REGISTRATION NUMBER

REVISIONS

ZONE	REV.	DESCRIPTION	BY	DATE	APP.

PUMP STATION 2 PRE-DESIGN

SVCW Silicon Valley Clean Water

PROCESS AND INSTRUMENTATION
PUMP STATION 2

SUPPLY FANS 5 AND 6

FILENAME
I-612-052.DWG
BC PROJECT NUMBER
142399
January 13, 2015
DRAWING NUMBER
1-612-052
SHEET NUMBER
37 OF 67

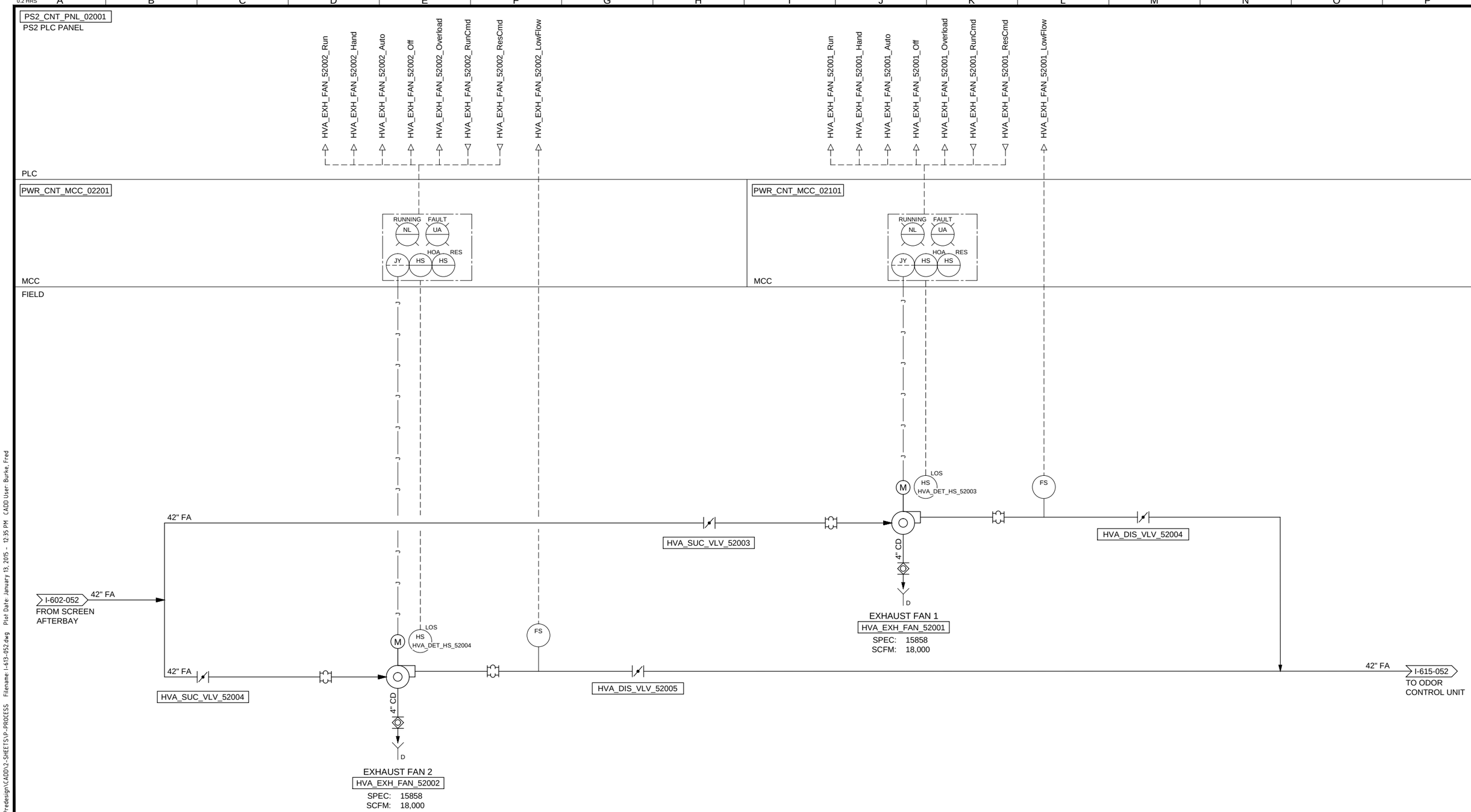

Brown AND Caldwell
WALNUT CREEK, CALIFORNIA

SUBMITTED: _____ DATE: _____
PROJECT MANAGER
APPROVED: _____ DATE: _____
BROWN AND CALDWELL

LINE IS 2 INCHES AT FULL SIZE (IF NOT 2" - SCALE ACCORDINGLY)
SCALE: NO SCALE
DESIGNED: ENGINEER
DRAWN: DRAFTER
CHECKED: CHECKED
APPROVED: APPROVED

EXTERNAL REFERENCE FILES
142399-PnID-T7-MF-01-D001.dwg
142399-TB-redwood city.dwg

PRELIMINARY

THIS DRAWING IS NOT VALID FOR CONSTRUCTION PURPOSES UNLESS IT BEARS THE SEAL AND SIGNATURE OF A DULY REGISTERED PROFESSIONAL

CHARLES W. JOYCE
ENGINEER-IN-RESPONSIBLE CHARGE
C33166
CALIFORNIA REGISTRATION NUMBER

REVISIONS

ZONE	REV.	DESCRIPTION	BY	DATE	APP.

PUMP STATION 2 PRE-DESIGN

SVCW Silicon Valley Clean Water

PROCESS AND INSTRUMENTATION
PUMP STATION 2

EXHAUST FANS 1 AND 2

FILENAME
I-613-052.DWG
BC PROJECT NUMBER
142399
January 13, 2015
DRAWING NUMBER
I-613-052
SHEET NUMBER
38 OF 67

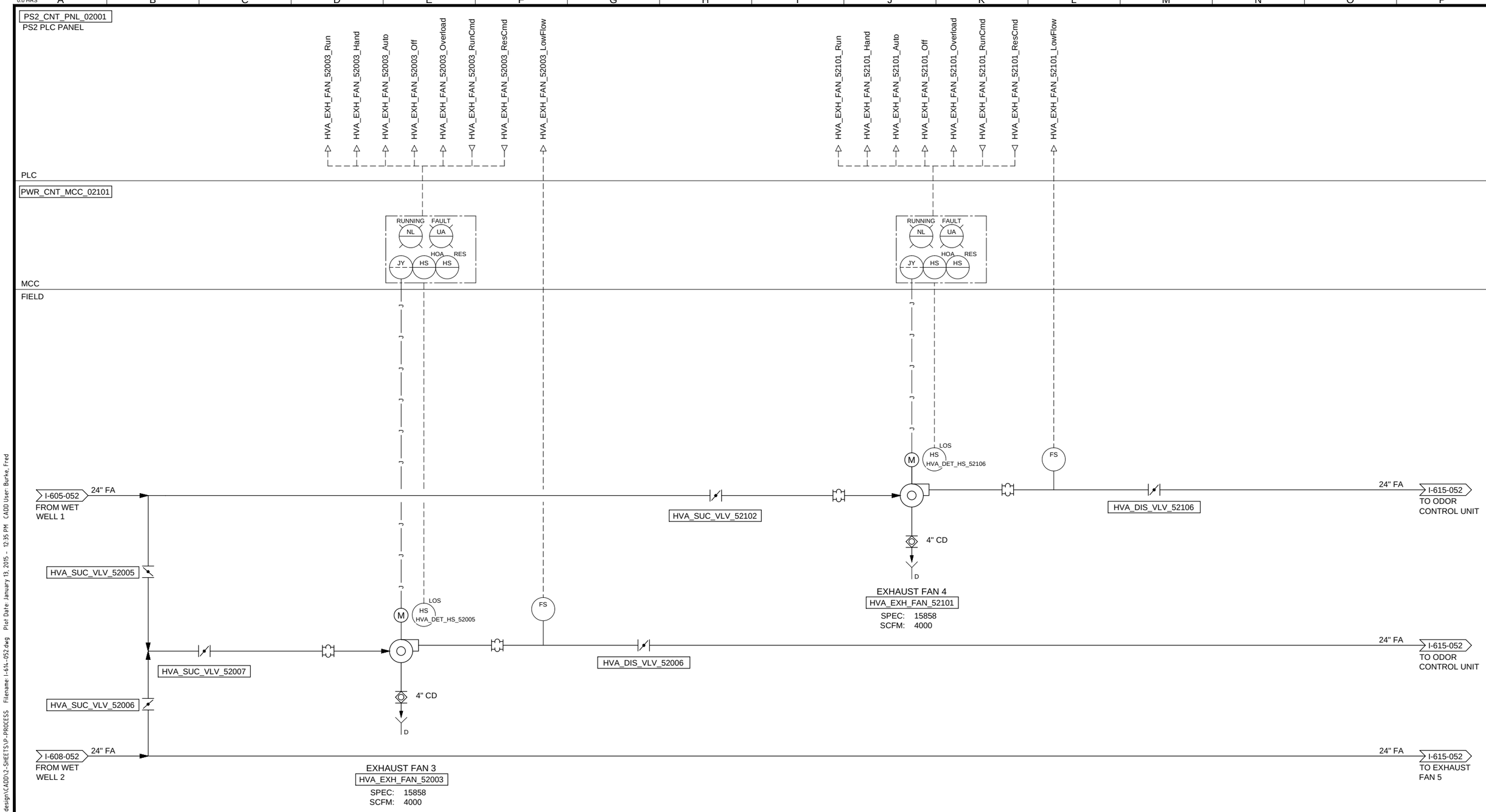

Brown AND Caldwell
WALNUT CREEK, CALIFORNIA

SUBMITTED: _____ DATE: _____
PROJECT MANAGER
APPROVED: _____ DATE: _____
BROWN AND CALDWELL

LINE IS 2 INCHES
AT FULL SIZE
(IF NOT 2" - SCALE ACCORDINGLY)

SCALE: NO SCALE
DESIGNED: G/B
DRAWN: GS
CHECKED: AH
APPROVED: TB

EXTERNAL REFERENCE FILES
142399-PnID-17-MF-01-D001.dwg
142399-TB-redwood city.dwg

PRELIMINARY

THIS DRAWING IS NOT VALID FOR CONSTRUCTION PURPOSES UNLESS IT BEARS THE SEAL AND SIGNATURE OF A DULY REGISTERED PROFESSIONAL

CHARLES W. JOYCE
ENGINEER-IN-RESPONSIBLE CHARGE
C33166
CALIFORNIA REGISTRATION NUMBER

REVISIONS

ZONE	REV.	DESCRIPTION	BY	DATE	APP.

PUMP STATION 2 PRE-DESIGN

SVCW Silicon Valley Clean Water

PROCESS AND INSTRUMENTATION
PUMP STATION 2

EXHAUST FANS 3 AND 4

FILENAME
I-614-052.DWG
BC PROJECT NUMBER
142399
January 13, 2015
DRAWING NUMBER
I-614-052
SHEET NUMBER
39 OF 67

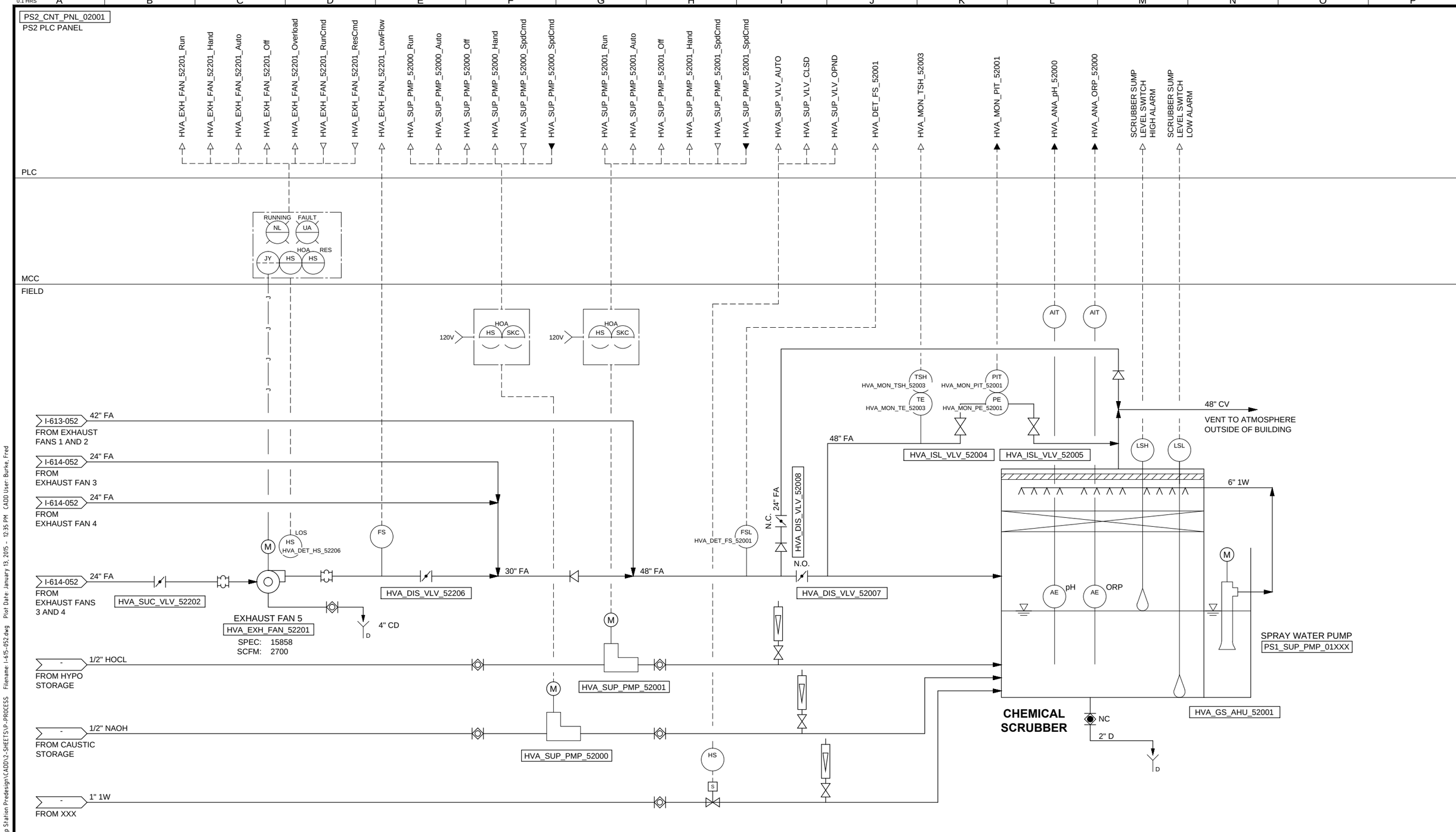

Brown AND Caldwell

WALNUT CREEK, CALIFORNIA

SUBMITTED: _____ DATE: _____
PROJECT MANAGER

APPROVED: _____ DATE: _____
BROWN AND CALDWELL

LINE IS 2 INCHES AT FULL SIZE (IF NOT 2" - SCALE ACCORDINGLY)

SCALE: NO SCALE

DESIGNED: ENGINEER
DRAWN: DRAFTER
CHECKED: CHECKED
APPROVED: APPROVED

EXTERNAL REFERENCE FILES
142399-PnID-17-MF-01-D001dwg
142399-TB-redwood city.dwg

PRELIMINARY

THIS DRAWING IS NOT VALID FOR CONSTRUCTION PURPOSES UNLESS IT BEARS THE SEAL AND SIGNATURE OF A DULY REGISTERED PROFESSIONAL

CHARLES W. JOYCE
ENGINEER-IN-RESPONSIBLE CHARGE
C33166
CALIFORNIA REGISTRATION NUMBER

REVISIONS

ZONE	REV.	DESCRIPTION	BY	DATE	APP.

PUMP STATION 2 PRE-DESIGN

SVCW Silicon Valley Clean Water

PROCESS AND INSTRUMENTATION

PUMP STATION 2

EXHAUST FAN 5 AND ODOR CONTROL SYSTEM

FILENAME I-615-052.DWG
BC PROJECT NUMBER 142399
January 13, 2015
DRAWING NUMBER **I-615-052**
SHEET NUMBER 40 OF 67

Path: P:\142000\142399 - SBSA Pump Station Predesign\CADD\2-SHEETS\P-PROCESS Filename: I-615-052.dwg Plot Date: January 13, 2015 - 12:35 PM CADD User: Burke, Fred

Acad Ver. 19.0S (LMS TECH)
0.1 HRS

PS2_CNT_PNL_02001
PS2 PLC PANEL

NOTES:

1. THE SYMBOL **XX" INDICATES SIZE AS REQUIRED BY TANK SUPPLIER MANUFACTURER.
2. ALL PIPE SIZES SHALL BE VERIFIED BY EQUIPMENT SUPPLIER.

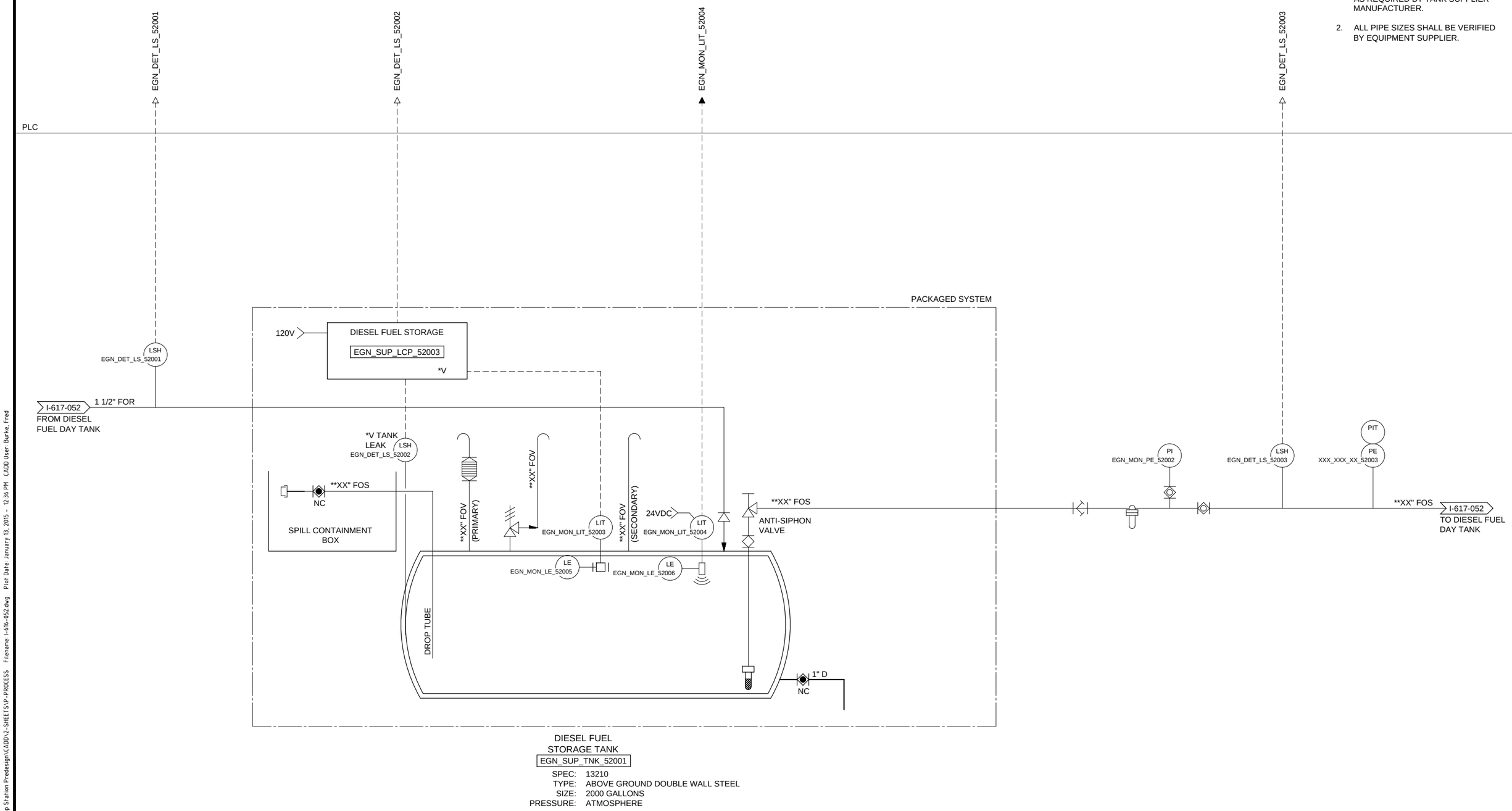

DIESEL FUEL
STORAGE TANK
EGN_SUP_TNK_52001

SPEC: 13210
TYPE: ABOVE GROUND DOUBLE WALL STEEL
SIZE: 2000 GALLONS
PRESSURE: ATMOSPHERE

Brown AND Caldwell
WALNUT CREEK, CALIFORNIA

SUBMITTED: _____ DATE: _____
PROJECT MANAGER
APPROVED: _____ DATE: _____
BROWN AND CALDWELL

LINE IS 2 INCHES AT FULL SIZE (IF NOT 2" - SCALE ACCORDINGLY)
SCALE: NO SCALE
DESIGNED: G/B
DRAWN: GS
CHECKED: AH
APPROVED: TB

EXTERNAL REFERENCE FILES
142399-PnID-T1-MF-01-D001.dwg
142399-TB-redwood city.dwg

PRELIMINARY

THIS DRAWING IS NOT VALID FOR CONSTRUCTION PURPOSES UNLESS IT BEARS THE SEAL AND SIGNATURE OF A DULY REGISTERED PROFESSIONAL

CHARLES W. JOYCE
ENGINEER-IN-RESPONSIBLE CHARGE
C33166
CALIFORNIA REGISTRATION NUMBER

REVISIONS

ZONE	REV.	DESCRIPTION	BY	DATE	APP.

PUMP STATION 2 PRE-DESIGN

SVCW Silicon Valley Clean Water

PROCESS AND INSTRUMENTATION
PUMP STATION 2

DIESEL FUEL STORAGE TANK

FILENAME
I-616-052.DWG
BC PROJECT NUMBER
142399
January 13, 2015
DRAWING NUMBER
I-616-052
SHEET NUMBER
41 OF 67

PS2_CNT_PNL_02001
PS2 PLC PANEL

NOTES:
1. THE SYMBOL *XX" INDICATES SIZE AS REQUIRED BY ENGINE GENERATOR MANUFACTURER.
2. PROVIDE ALL FUEL OIL PIPING REQUIRED BY THE VENDOR.
3. SIGNAL TO SCADA HIGH LEVEL AT 105% FULL (LSHH) AND LOW LEVEL AT 50% FULL (LSLL). SIGNAL TO ENGINE CONTROL PANEL TO STOP (COOL DOWN) GENERATOR AT 10% FULL (LSLLL).
4. PROVIDE ENGINE EXHAUST (EE) PIPING.

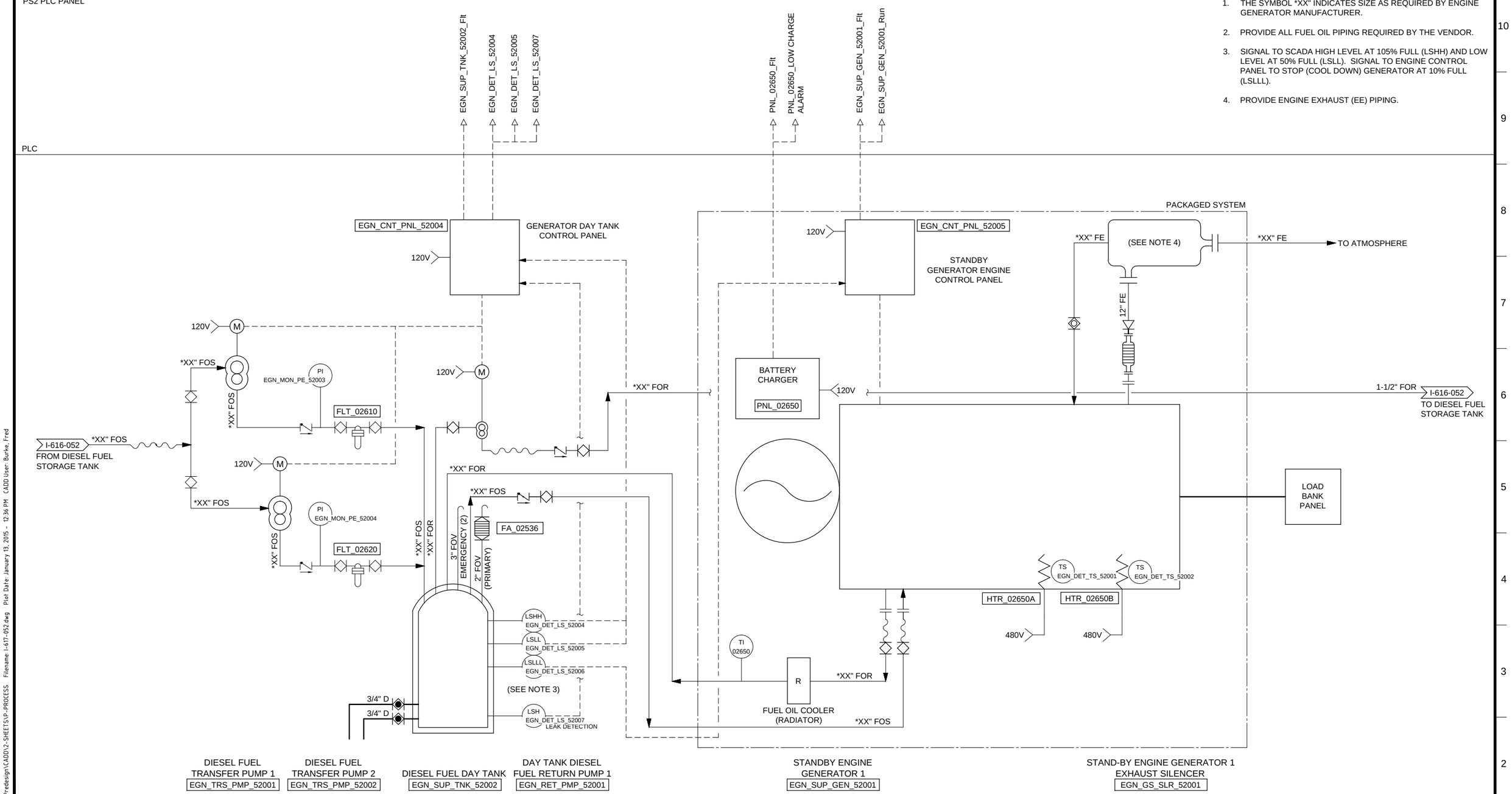

Brown AND Caldwell
WALNUT CREEK, CALIFORNIA

SUBMITTED: _____ DATE: _____
PROJECT MANAGER
APPROVED: _____ DATE: _____
BROWN AND CALDWELL

LINE IS 2 INCHES AT FULL SIZE (IF NOT 2" - SCALE ACCORDINGLY)
SCALE: NO SCALE
DESIGNED: G/B
DRAWN: GS
CHECKED: AH
APPROVED: TB

EXTERNAL REFERENCE FILES
142399-PnID-T1-MF-01-D001dwg
142399-TB-redwood city.dwg

PRELIMINARY

THIS DRAWING IS NOT VALID FOR CONSTRUCTION PURPOSES UNLESS IT BEARS THE SEAL AND SIGNATURE OF A DULY REGISTERED PROFESSIONAL

CHARLES W. JOYCE
ENGINEER-IN-RESPONSIBLE CHARGE
C33166
CALIFORNIA REGISTRATION NUMBER

REVISIONS

ZONE	REV.	DESCRIPTION	BY	DATE	APP.

PUMP STATION 2 PRE-DESIGN

SVCW Silicon Valley Clean Water

PROCESS AND INSTRUMENTATION
PUMP STATION 2

STANDBY POWER GENERATION SYSTEM

FILENAME I-617-052.DWG
BC PROJECT NUMBER 142399
January 13, 2015
DRAWING NUMBER **I-617-052**
SHEET NUMBER 42 OF 67

PS2_CNT_PNL_02001
PS2 PLC PANEL

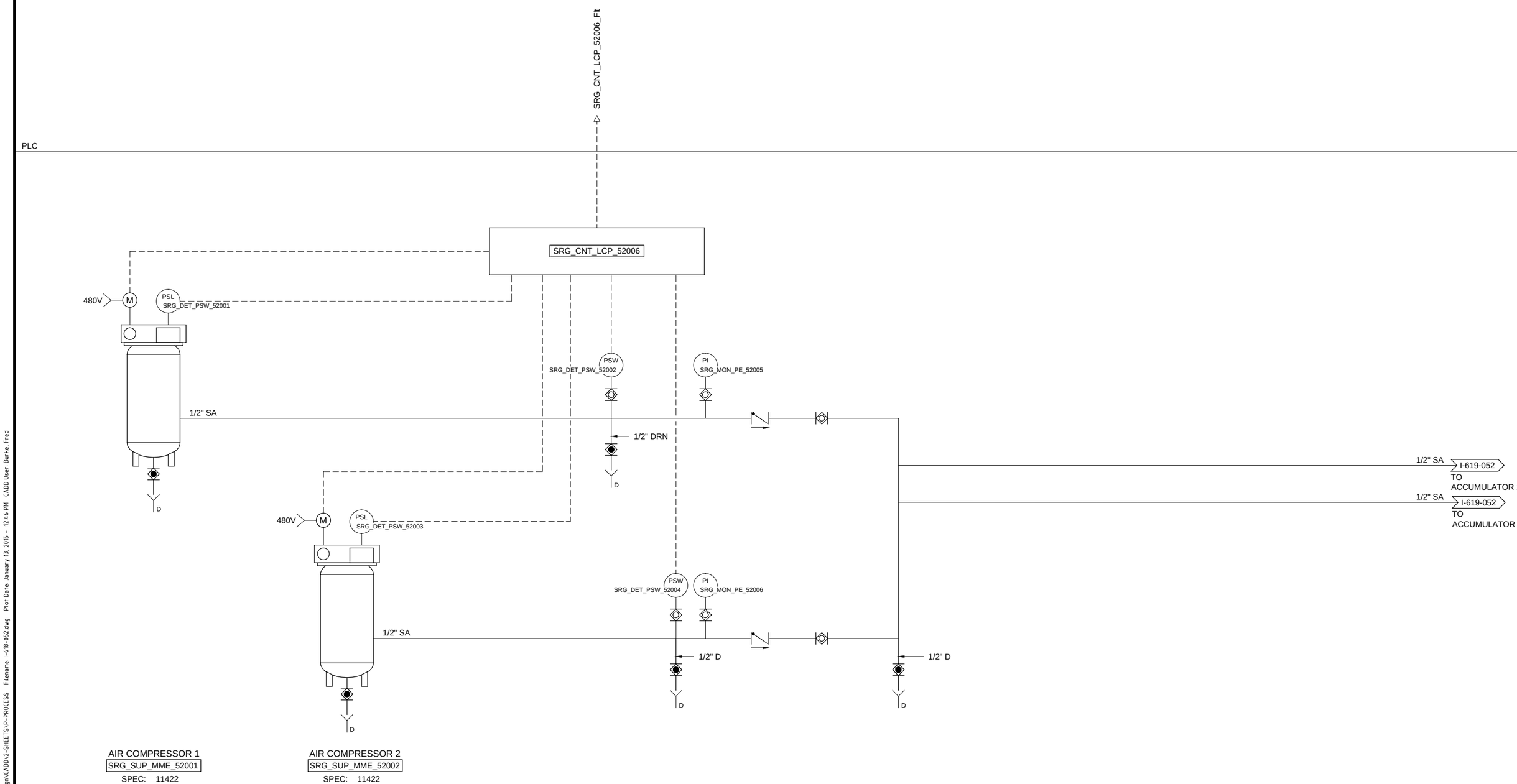

Brown AND Caldwell
WALNUT CREEK, CALIFORNIA

SUBMITTED: _____ DATE: _____
PROJECT MANAGER
APPROVED: _____ DATE: _____
BROWN AND CALDWELL

LINE IS 2 INCHES AT FULL SIZE (IF NOT 2" - SCALE ACCORDINGLY)
SCALE: NO SCALE
DESIGNED: G/B
DRAWN: GS
CHECKED: AH
APPROVED: TB

EXTERNAL REFERENCE FILES
142399-PnID-17-MF-01-D001.dwg
142399-TB-redwood city.dwg

PRELIMINARY

THIS DRAWING IS NOT VALID FOR CONSTRUCTION PURPOSES UNLESS IT BEARS THE SEAL AND SIGNATURE OF A DULY REGISTERED PROFESSIONAL

CHARLES W. JOYCE
ENGINEER-IN-RESPONSIBLE CHARGE
C33166
CALIFORNIA REGISTRATION NUMBER

REVISIONS

ZONE	REV.	DESCRIPTION	BY	DATE	APP.

PUMP STATION 2 PRE-DESIGN

SVCW Silicon Valley Clean Water

PROCESS AND INSTRUMENTATION
PUMP STATION 2

AIR COMPRESSORS

FILENAME
I-618-052.DWG
BC PROJECT NUMBER
142399
January 13, 2015
DRAWING NUMBER
I-618-052
SHEET NUMBER
43 OF 67

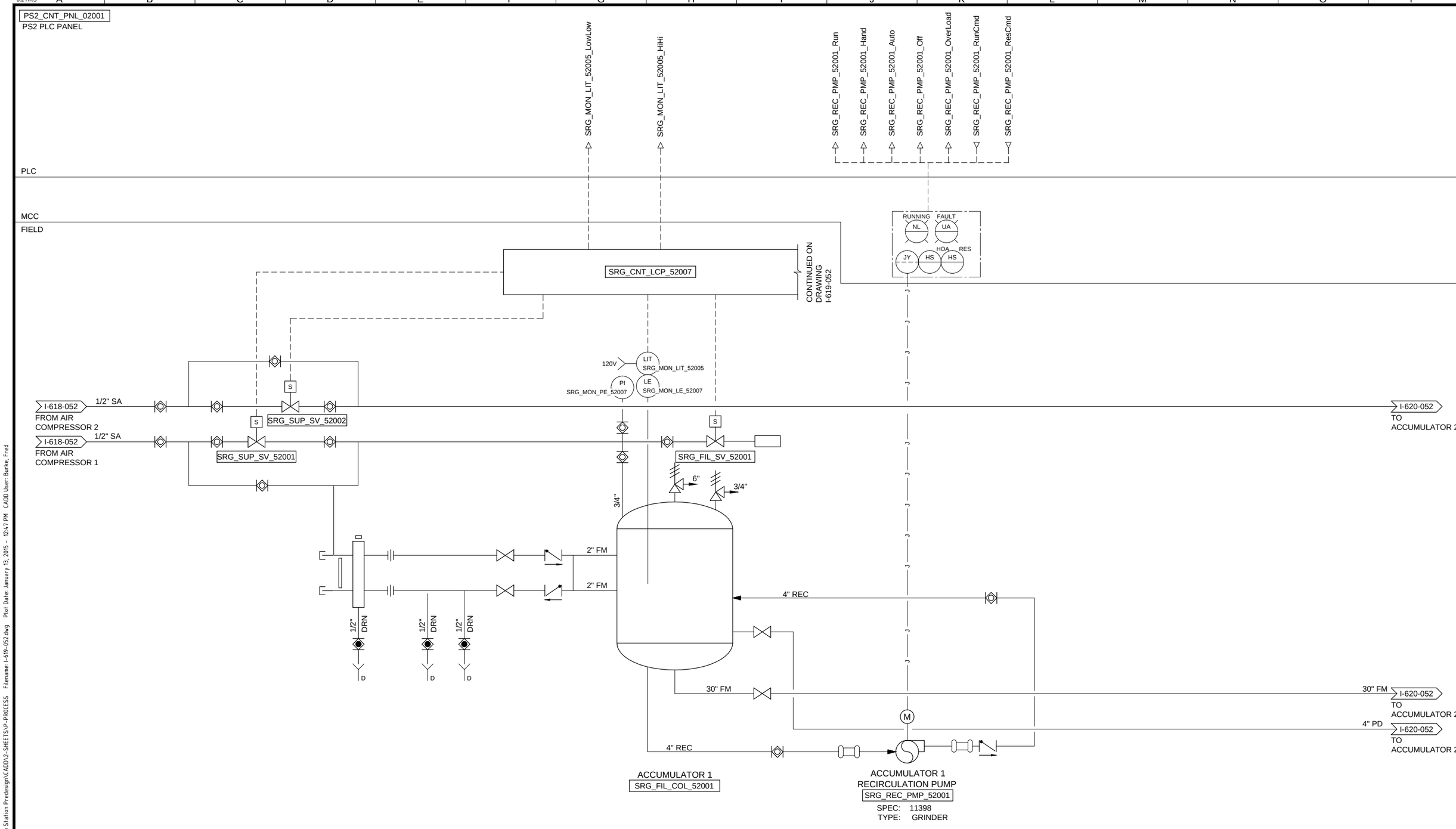

Path: P:\142000\142399 - SBSA Pump Station Predesign\CADD\2-SHEETS\P-PROCESS Filename: I-619-052.dwg Plot Date: January 13, 2015 - 12:47 PM CADD User: Burke, Fred

Brown AND Caldwell
WALNUT CREEK, CALIFORNIA

SUBMITTED: _____ DATE: _____
PROJECT MANAGER
APPROVED: _____ DATE: _____
BROWN AND CALDWELL

LINE IS 2 INCHES AT FULL SIZE (IF NOT 2" - SCALE ACCORDINGLY)
SCALE: NO SCALE
DESIGNED: G/B
DRAWN: GS
CHECKED: AH
APPROVED: TB

EXTERNAL REFERENCE FILES
142399-PnID-17-MF-01-D001.dwg
142399-TB-redwood city.dwg

PRELIMINARY

THIS DRAWING IS NOT VALID FOR CONSTRUCTION PURPOSES UNLESS IT BEARS THE SEAL AND SIGNATURE OF A DULY REGISTERED PROFESSIONAL

CHARLES W. JOYCE
ENGINEER-IN-RESPONSIBLE CHARGE
C33166
CALIFORNIA REGISTRATION NUMBER

REVISIONS

ZONE	REV.	DESCRIPTION	BY	DATE	APP.

PUMP STATION 2 PRE-DESIGN

SVCW Silicon Valley Clean Water

PROCESS AND INSTRUMENTATION
PUMP STATION 2

ACCUMULATOR SYSTEM 1

FILENAME I-619-052.DWG
BC PROJECT NUMBER 142399
January 13, 2015
DRAWING NUMBER **I-619-052**
SHEET NUMBER 44 OF 67

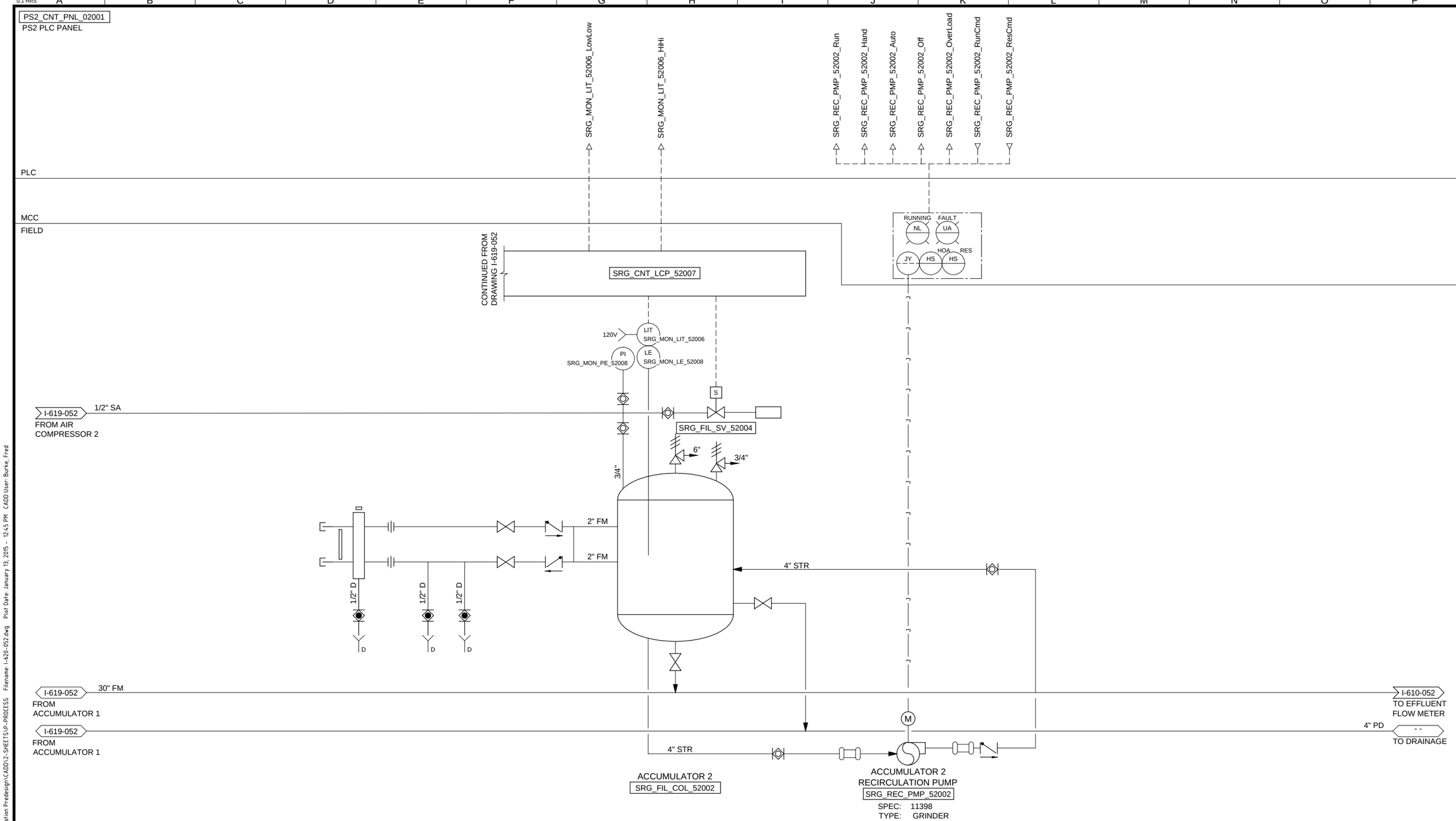

Brown AND Caldwell
WALNUT CREEK, CALIFORNIA

SUBMITTED: _____ DATE: _____
PROJECT MANAGER
APPROVED: _____ DATE: _____
BROWN AND CALDWELL

LINE IS 2 INCHES AT FULL SIZE (IF NOT 2" - SCALE ACCORDINGLY)
SCALE: NO SCALE
DESIGNED: G/B
DRAWN: GS
CHECKED: AH
APPROVED: TB

EXTERNAL REFERENCE FILES
142399-PnID-17-MF-01-D001dwg
142399-TB-redwood city.dwg

PRELIMINARY

THIS DRAWING IS NOT VALID FOR CONSTRUCTION PURPOSES UNLESS IT BEARS THE SEAL AND SIGNATURE OF A DULY REGISTERED PROFESSIONAL

CHARLES W. JOYCE
ENGINEER-IN-RESPONSIBLE CHARGE
C33166
CALIFORNIA REGISTRATION NUMBER

REVISIONS

ZONE	REV.	DESCRIPTION	BY	DATE	APP.

PUMP STATION 2 PRE-DESIGN

SVCW Silicon Valley Clean Water

PROCESS AND INSTRUMENTATION
PUMP STATION 2

ACCUMULATOR SYSTEM 2

FILENAME
I-620-052.DWG
BC PROJECT NUMBER
142399
January 13, 2015
DRAWING NUMBER
I-620-052
SHEET NUMBER
45 OF 67

KEY NOTES

1. REMOVE AND DISPOSE OF BLOWERS, DUCTING, PADS AND APPURTENANCES
2. REMOVE AND DISPOSE OF MCC AND APPURTENANCES
3. REMOVE AND DISPOSE OF ENGINE GENERATOR, PADS AND APPURTENANCES
4. REMOVE AND DISPOSE OF PIPING, PIPE SUPPORTS AND APPURTENANCES
5. REMOVE AND DISPOSE OF BARMINUTOR AND APPURTENANCES
6. REMOVE AND DISPOSE OF GATE AND COVER
7. REMOVE AND DISPOSE OF PUMPS, PADS, PIPING, PIPE SUPPORTS AND APPURTENANCES
8. REMOVE AND DISPOSE OF 36" WS HEADER AND APPURTENANCES
9. REMOVE AND DISPOSE OF STOP GATE

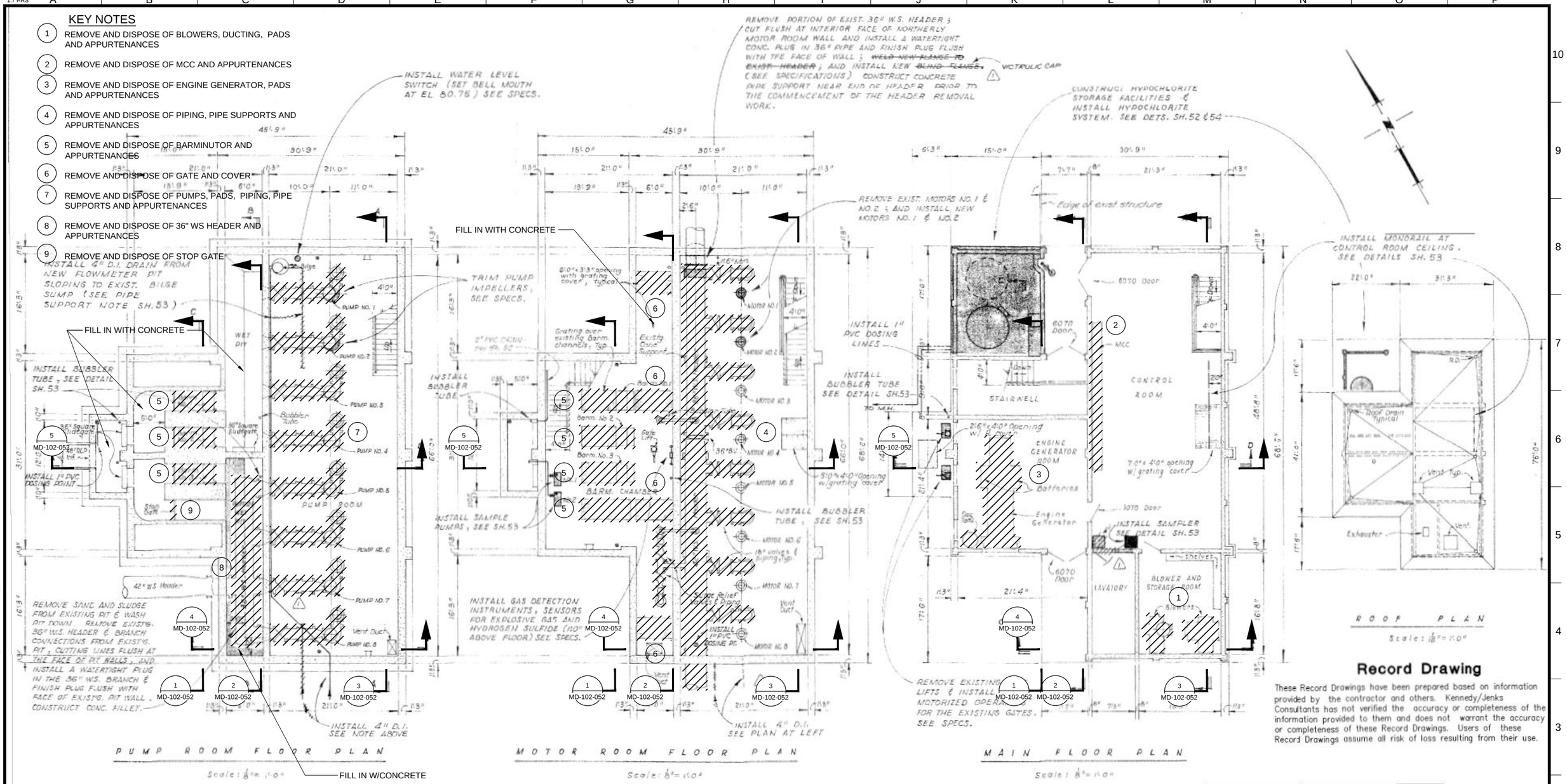

Record Drawing

These Record Drawings have been prepared based on information provided by the contractor and others. Kennedy/Jenks Consultants has not verified the accuracy or completeness of the information provided to them and does not warrant the accuracy or completeness of these Record Drawings. Users of these Record Drawings assume all risk of loss resulting from their use.

Brown AND Caldwell
WALNUT CREEK, CALIFORNIA

SUBMITTED: _____ DATE: _____ (PROJECT MANAGER)
APPROVED: _____ DATE: _____ (BROWN AND CALDWELL)

LINE IS 2 INCHES AT FULL SIZE (IF NOT 2" - SCALE ACCORDINGLY)
SCALE: 1/8" = 1'-0"
DESIGNED: ENGINEER
DRAWN: DRAFTER
CHECKED: CHECKED
APPROVED: APPROVED

EXTERNAL REFERENCE FILES: 142399-TB-redwood city.dwg

PRELIMINARY

THIS DRAWING IS NOT VALID FOR CONSTRUCTION PURPOSES UNLESS IT BEARS THE SEAL AND SIGNATURE OF A DULY REGISTERED PROFESSIONAL

CHARLES W. JOYCE
ENGINEER-IN-RESPONSIBLE CHARGE
C33166
CALIFORNIA REGISTRATION NUMBER

REVISIONS

ZONE	REV.	DESCRIPTION	BY	DATE	APP.

PUMP STATION 2 PRE-DESIGN

SVCW Silicon Valley Clean Water

MECHANICAL
PUMP STATION 2

PIPEWORK & EQUIPMENT PLANS

FILENAME: MD-101-052.DWG
BC PROJECT NUMBER: 142399
January 13, 2015
DRAWING NUMBER: **MD-101-052**
SHEET NUMBER: 46 OF 67

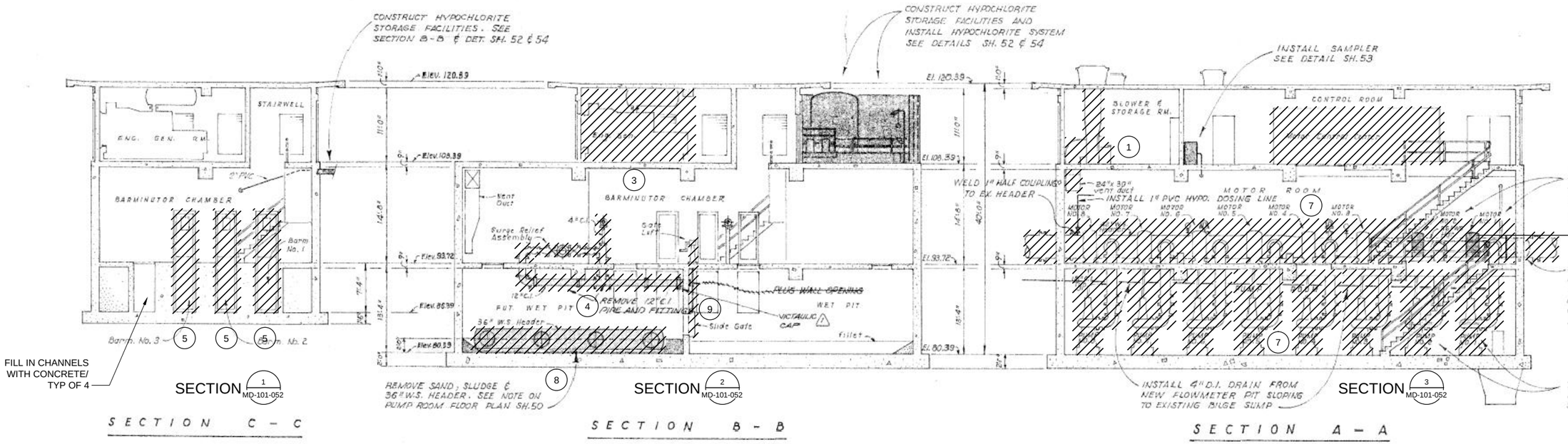

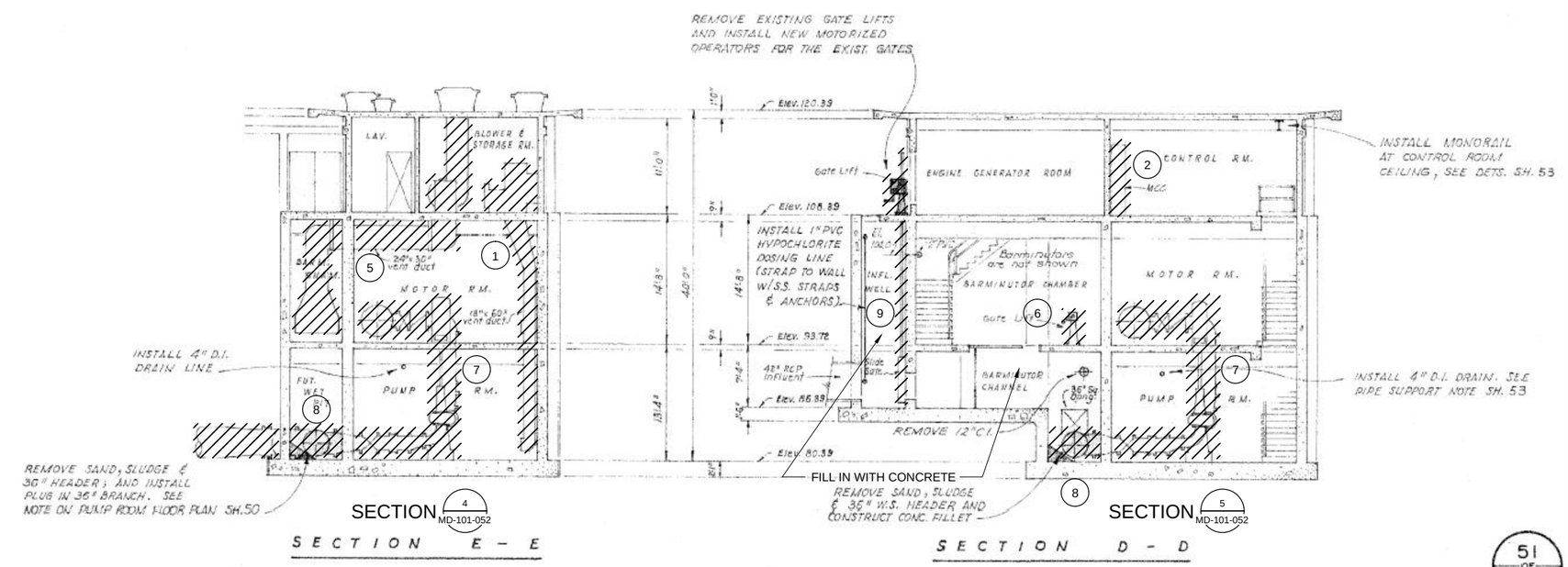

KEY NOTES

1. REMOVE AND DISPOSE OF BLOWERS, DUCTING, PADS AND APPURTENANCES
2. REMOVE AND DISPOSE OF MCC, PADS AND APPURTENANCES
3. REMOVE AND DISPOSE OF ENGINE GENERATOR, PAD AND APPURTENANCES
4. REMOVE AND DISPOSE OF PIPING, PIPE SUPPORTS AND APPURTENANCES
5. REMOVE AND DISPOSE OF BARMINUTOR AND APPURTENANCES
6. REMOVE AND DISPOSE OF GATE AND COVER
7. REMOVE AND DISPOSE OF PUMPS, PUMP PADS, PIPING, PIPING SUPPORTS AND APPURTENANCES
8. REMOVE AND DISPOSE OF 36" WS HEADER AND APPURTENANCES
9. REMOVE AND DISPOSE OF SLIDE GATE AND APPURTENANCES

Record Drawing

△1 RECORD DRAWING, JUNE 1882

51 OF 141

Brown AND Caldwell
WALNUT CREEK, CALIFORNIA

SUBMITTED: _____ DATE: _____
PROJECT MANAGER
APPROVED: _____ DATE: _____
BROWN AND CALDWELL

LINE IS 2 INCHES AT FULL SIZE (IF NOT 2" - SCALE ACCORDINGLY)
SCALE: 1/8" = 1'-0"
DESIGNED: ENGINEER
DRAWN: DRAFTER
CHECKED: CHECKED
APPROVED: APPROVED

EXTERNAL REFERENCE FILES
142399-T8-redwood city.dwg

PRELIMINARY

THIS DRAWING IS NOT VALID FOR CONSTRUCTION PURPOSES UNLESS IT BEARS THE SEAL AND SIGNATURE OF A DULY REGISTERED PROFESSIONAL

CHARLES W. JOYCE
ENGINEER-IN-RESPONSIBLE CHARGE
C33166
CALIFORNIA REGISTRATION NUMBER

REVISIONS

ZONE	REV.	DESCRIPTION	BY	DATE	APP.

PUMP STATION 2 PRE-DESIGN

SVCW Silicon Valley Clean Water

MECHANICAL
PUMP STATION 2

PIPEWORK & EQUIPMENT SECTIONS

FILENAME MD-102-052.DWG
BC PROJECT NUMBER 142399
January 13, 2015
DRAWING NUMBER **MD-102-052**
SHEET NUMBER 47 OF 67

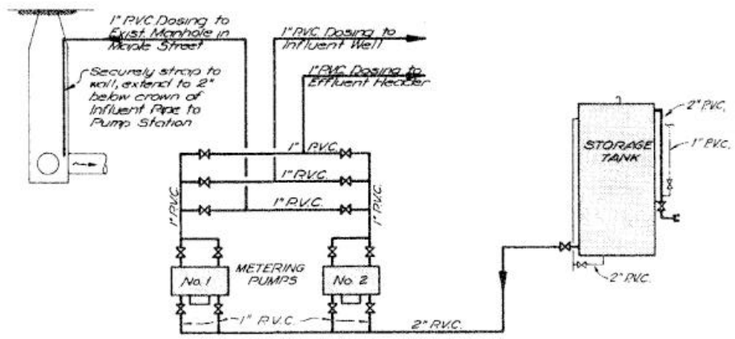

HYPOCHLORITE SYSTEM DOSING DIAGRAM

No Scale

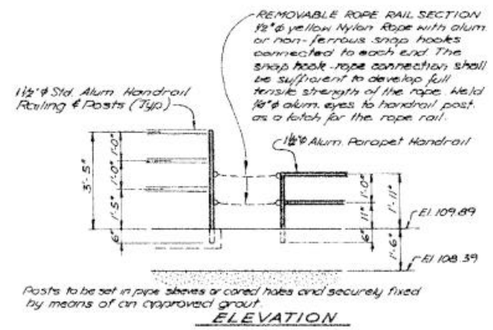

ELEVATION

REMOVABLE ROPE RAIL DETAIL

Scale: 3/8" = 1'-0"

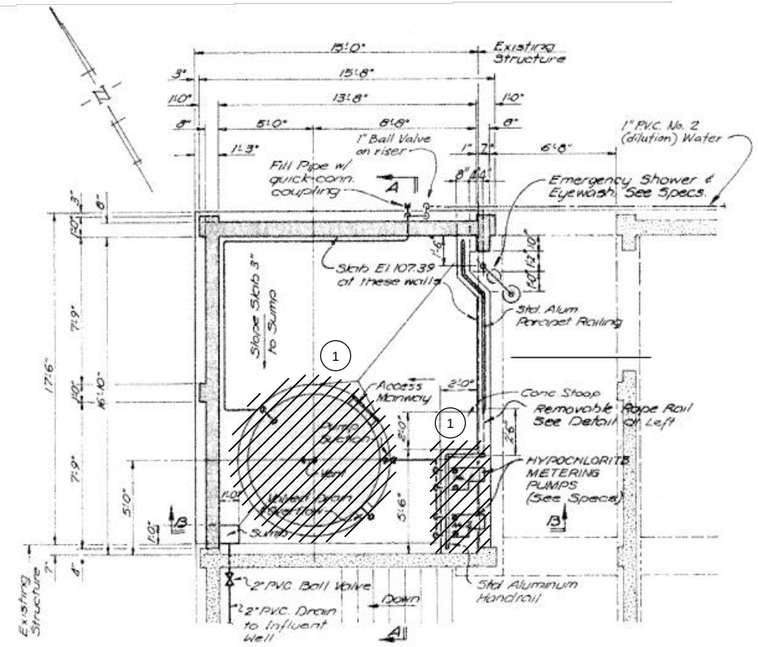

PLAN

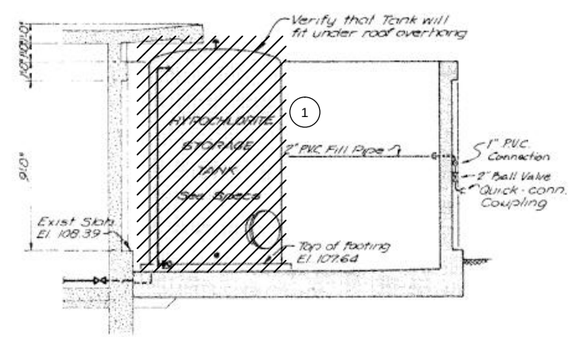

SECTION A-A

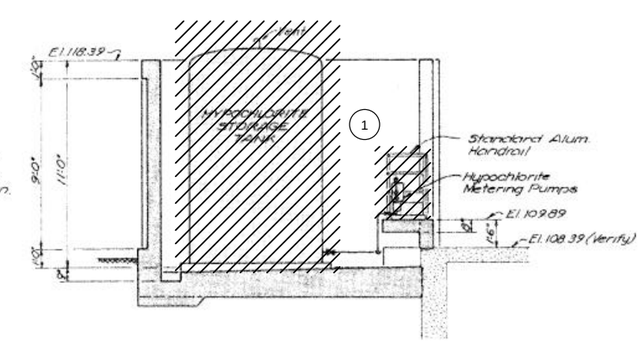

SECTION B-B

KEY NOTES

1. REMOVE AND DISPOSE OF HYPOCHLORITE TANK, TANK PADS AND APPURTENANCES.

(REVISED SET .II INF 2006)

52 of 141

Record Drawing

These Record Drawings have been prepared based on information provided by the contractor and others. Kennedy/Jenks

RECORD DRAWING, JUNE 1982

Brown AND Caldwell
WALNUT CREEK, CALIFORNIA

SUBMITTED: _____ DATE: _____
PROJECT MANAGER
APPROVED: _____ DATE: _____
BROWN AND CALDWELL

LINE IS 2 INCHES AT FULL SIZE (IF NOT 2" - SCALE ACCORDINGLY)
SCALE: AS SHOWN
DESIGNED: ENGINEER
DRAWN: DRAFTER
CHECKED: CHECKED
APPROVED: APPROVED

EXTERNAL REFERENCE FILES
142399-TB-redwood city.dwg

PRELIMINARY

THIS DRAWING IS NOT VALID FOR CONSTRUCTION PURPOSES UNLESS IT BEARS THE SEAL AND SIGNATURE OF A DULY REGISTERED PROFESSIONAL

CHARLES W. JOYCE
ENGINEER-IN-RESPONSIBLE CHARGE
C33166
CALIFORNIA REGISTRATION NUMBER

REVISIONS

ZONE	REV.	DESCRIPTION	BY	DATE	APP.

PUMP STATION 2 PRE-DESIGN

SVCW Silicon Valley Clean Water

MECHANICAL
PUMP STATION 2

PIPEWORK & EQUIPMENT
HYPOCHLORITE SYSTEM
DETAILS

FILENAME MD-103-052.DWG
BC PROJECT NUMBER 142399
January 13, 2015
DRAWING NUMBER **MD-103-052**
SHEET NUMBER 48 OF 67

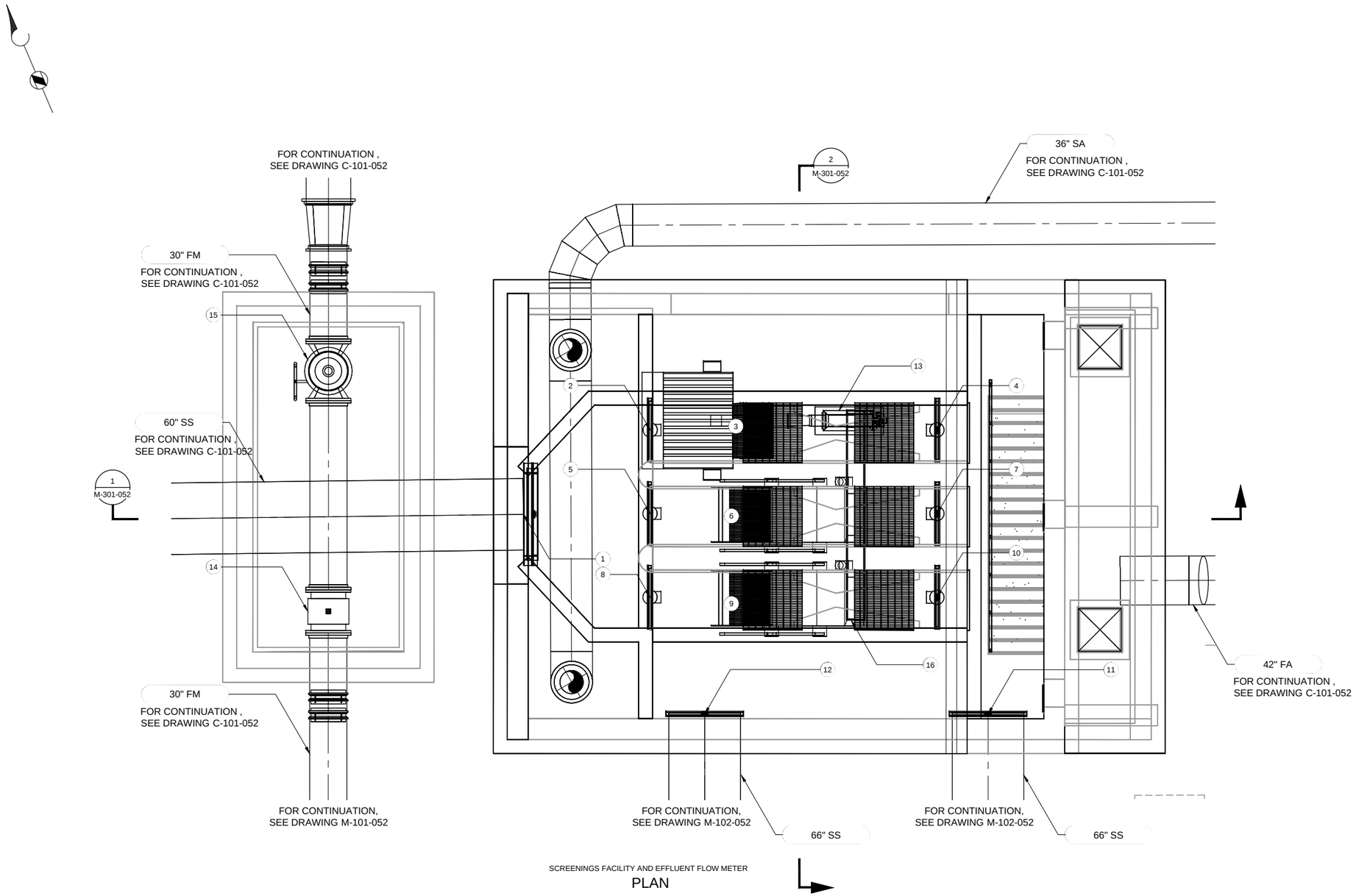

SCREENINGS FACILITY AND EFFLUENT FLOW METER
PLAN

KEY NOTES:

1	HDW_INL_SG_52004
2	HDW_INL_SG_52001
3	HDW_SCR_MBS_52001
4	HDW_OUT_SG_52001
5	HDW_INL_SG_52003
6	HDW_SCR_MME_52001
7	HDW_OUT_SG_52003
8	HDW_INL_SG_52002
9	HDW_SCR_MBS_52002
10	HDW_OUT_SG_52002
11	HDW_OUT_SG_52101
12	HDW_OUT_SG_52201
13	HDW_SCR_WC_52001
14	EFF_MON_FE_52002
15	EFF_ISL_VLV_52002
16	SCREENINGS SLUICE CHANNEL

Brown AND Caldwell
WALNUT CREEK, CALIFORNIA

SUBMITTED: _____ DATE: _____
PROJECT MANAGER
APPROVED: _____ DATE: _____
BROWN AND CALDWELL

LINE IS 2 INCHES
AT FULL SIZE
(IF NOT 2" - SCALE ACCORDINGLY)
SCALE: 1/4" = 1'-0"
DESIGNED: ENGINEER
DRAWN: DRAFTER
CHECKED: CHECKED
APPROVED: APPROVED

EXTERNAL REFERENCE FILES
142399-MF-02-Redwood City-Mechanical.dwg
142399-MF-02-Redwood City-Topo.dwg
142399-TB-redwood city.dwg
142399-MF-02RC-S-NPS-LVL3-3D.dwg
142399-MF-02RC-S-NPS-LVL1-3D.dwg
142399-MF-02RC-S-NPS-LVL2-3D.dwg
142399-MF-02RC-S-SCRN-LVL2-3D.dwg
142399-MF-02RC-S-SCRN-LVL1-3D.dwg

PRELIMINARY

THIS DRAWING IS NOT VALID FOR CONSTRUCTION PURPOSES UNLESS IT BEARS THE SEAL AND SIGNATURE OF A DULY REGISTERED PROFESSIONAL

CHARLES W. JOYCE
ENGINEER-IN-RESPONSIBLE CHARGE
C33166
CALIFORNIA REGISTRATION NUMBER

REVISIONS

ZONE	REV.	DESCRIPTION	BY	DATE	APP.

PUMP STATION 2 PRE-DESIGN

SVCW
Silicon Valley Clean Water

MECHANICAL
PUMP STATION 2

SCREENINGS FACILITY AND EFFLUENT FLOW METER PLAN

FILENAME
M-101-052.DWG
BC PROJECT NUMBER
142399
January 13, 2015
DRAWING NUMBER
M-101-052
SHEET NUMBER
49 OF 67

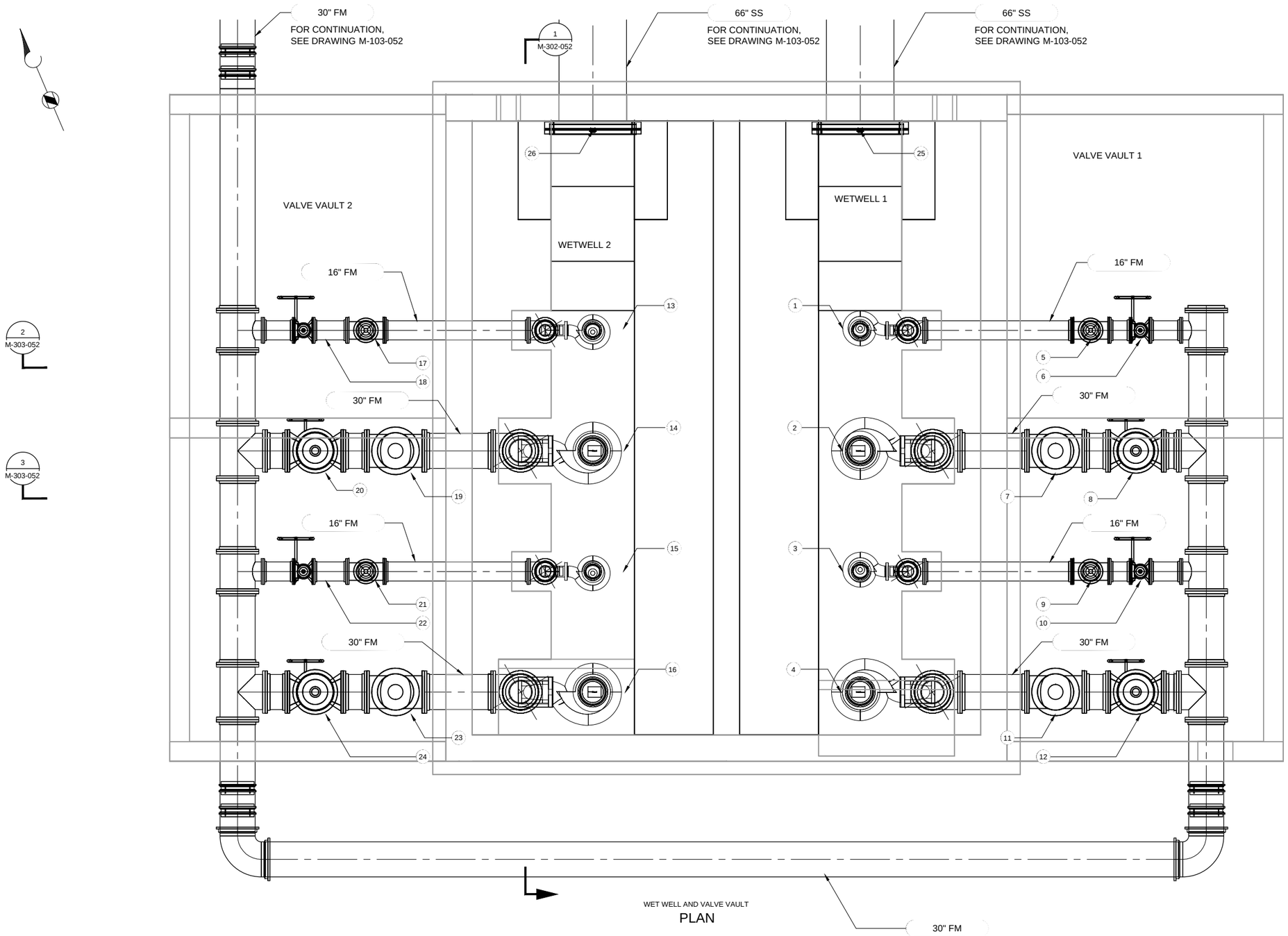

WET WELL AND VALVE VAULT
PLAN

KEY NOTES:

1	PS2_TRS-PMP-52101
2	PS2_TRS-PMP-052102
3	PS2_TRS-PMP-052103
4	PS2_TRS-PMP-52104
5	PS2_DIS_VLV_52101
6	PS2_ISL_VLV_52101
7	PS2_DIS_VLV_52102
8	PS2_ISL_VLV_52102
9	PS2_DIS_VLV_52103
10	PS2_ISL_VLV_52103
11	PS2_DIS_VLV_52104
12	PS2_ISL_VLV_52104
13	PS2_TRS-PMP-52201
14	PS2_TRS-PMP-052202
15	PS2_TRS-PMP-052203
16	PS2_TRS-PMP-52204
17	PS2_DIS_VLV_52201
18	PS2_ISL_VLV_52201
19	PS2_DIS_VLV_52202
20	PS2_ISL_VLV_52202
21	PS2_DIS_VLV_52203
22	PS2_ISL_VLV_52203
23	PS2_DIS_VLV_52204
24	PS2_ISL_VLV_52204
25	PS2_INF_SG_52101
26	PS2_INF_SG_52201

Brown AND Caldwell
WALNUT CREEK, CALIFORNIA

SUBMITTED: _____ DATE: _____
PROJECT MANAGER
APPROVED: _____ DATE: _____
BROWN AND CALDWELL

LINE IS 2 INCHES AT FULL SIZE (IF NOT 2" - SCALE ACCORDINGLY)
SCALE: 1/4" = 1'-0"
DESIGNED: B. VISITACION
DRAWN: F. BURKE
CHECKED: T. BANYAI
APPROVED: C. JOYCE

EXTERNAL REFERENCE FILES
142399-MF-02-Redwood City-Mechanical.dwg
142399-MF-02-Redwood City-Topo.dwg
142399-02-SC0001.dwg
142399-TB-redwood city.dwg
142399-MF-02RC-S-FMV-ALL.dwg
142399-MF-02RC-S-NPS-LVL1-3D.dwg
142399-MF-02RC-S-NPS-LVL2-3D.dwg

PRELIMINARY

THIS DRAWING IS NOT VALID FOR CONSTRUCTION PURPOSES UNLESS IT BEARS THE SEAL AND SIGNATURE OF A DULY REGISTERED PROFESSIONAL

CHARLES W. JOYCE
ENGINEER-IN-RESPONSIBLE CHARGE
C33166
CALIFORNIA REGISTRATION NUMBER

REVISIONS

ZONE	REV.	DESCRIPTION	BY	DATE	APP.

PUMP STATION 2 PRE-DESIGN

SVCW Silicon Valley Clean Water

MECHANICAL
PUMP STATION 2

WET WELL AND VALVE VAULT
PLAN

FILENAME M-102-052.DWG
BC PROJECT NUMBER 142399
January 13, 2015
DRAWING NUMBER **M-102-052**
SHEET NUMBER 50 OF 67

KEY NOTES:

1. PS2_FIL_COL_02001
2. PS2_REC_PMP_02001
3. PS2_FIL_COL_02202
4. PS2_REC_PMP_02202

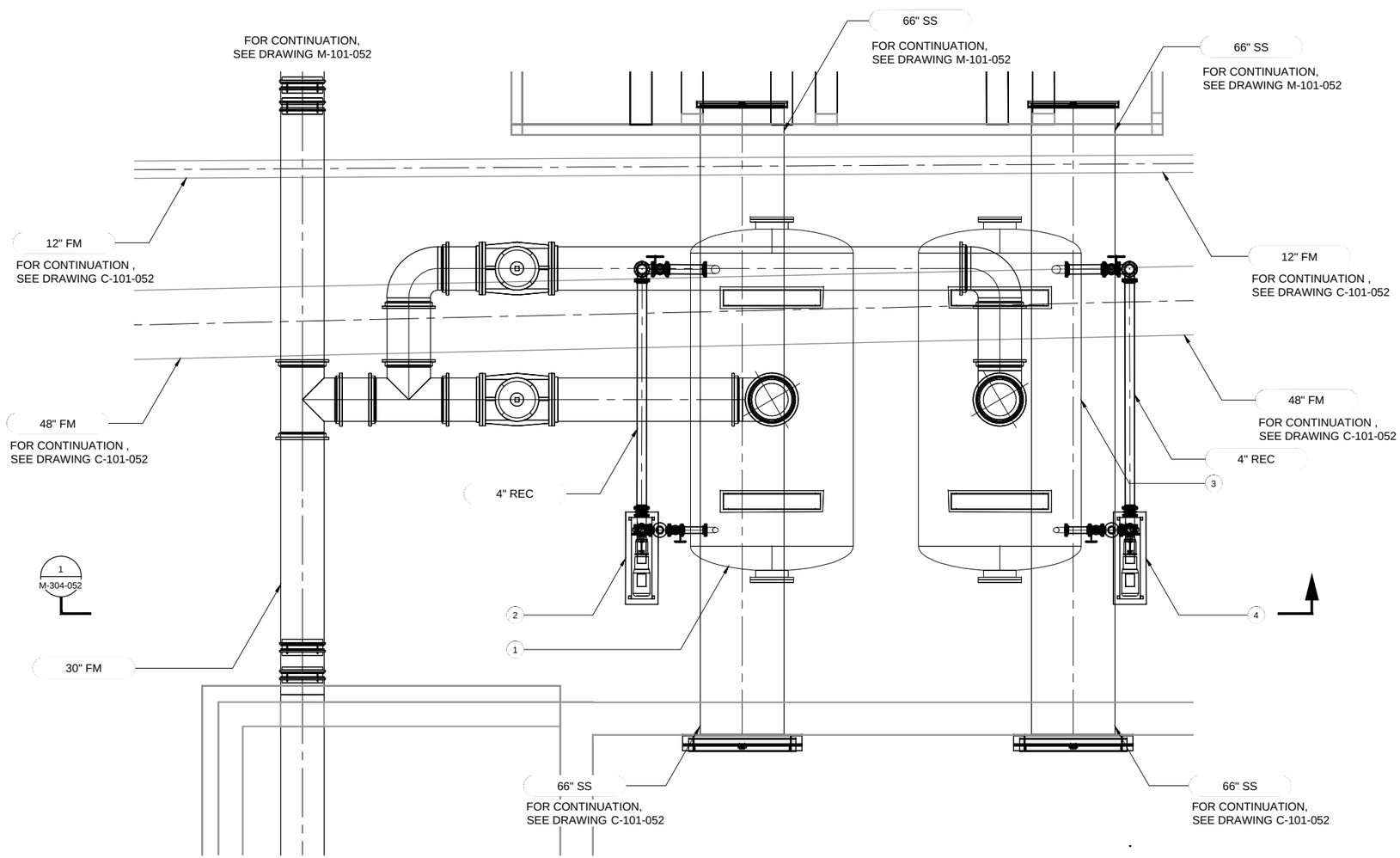

SURGE CONTROL
PLAN
SCALE: 1/4" = 1'-0"

Path: P:\142000\142399 - SBSA Pump Station Predesign\CADD\2-SHEETS\M-MECHANICAL Filename: M-103-052.dwg Plot Date: January 13, 2015 - 12:37 PM CADD User: Burke, Fred

Brown AND Caldwell
WALNUT CREEK, CALIFORNIA

SUBMITTED: _____ DATE: _____
PROJECT MANAGER
APPROVED: _____ DATE: _____
BROWN AND CALDWELL

LINE IS 2 INCHES AT FULL SIZE (IF NOT 2" - SCALE ACCORDINGLY)
SCALE: AS SHOWN
DESIGNED: ENGINEER
DRAWN: DRAFTER
CHECKED: CHECKED
APPROVED: APPROVED

EXTERNAL REFERENCE FILES
142399-MF-02-Redwood City-Mechanical.dwg
142399-MF-02-Redwood City-Topo.dwg
142399-02-SC0001.dwg
142399-MF-02RC-S-SCRN-LVL2-3D.dwg
142399-TB-redwood city.dwg
142399-MF-02RC-S-NPS-LVL2-3D.dwg

PRELIMINARY

THIS DRAWING IS NOT VALID FOR CONSTRUCTION PURPOSES UNLESS IT BEARS THE SEAL AND SIGNATURE OF A DULY REGISTERED PROFESSIONAL

CHARLES W. JOYCE
ENGINEER-IN-RESPONSIBLE CHARGE
C33166
CALIFORNIA REGISTRATION NUMBER

REVISIONS

ZONE	REV.	DESCRIPTION	BY	DATE	APP.

PUMP STATION 2 PRE-DESIGN

SVCW Silicon Valley Clean Water

MECHANICAL
PUMP STATION 2

SURGE CONTROL PLAN

FILENAME
M-103-052.DWG
BC PROJECT NUMBER
142399
January 13, 2015
DRAWING NUMBER
M-103-052
SHEET NUMBER
51 OF 67

KEY NOTES:

1	HDW_INL_SG_52003
2	HDW_SCR_MBS_52001
3	HDW_OUT_SG_52003
4	HDW_SCR_MME_52001
5	HDW_SCR_MBS_52002
6	HDW_SCR_WC_52001
7	HDW_OUT_SG_52101
8	HDW_INL_SG_52004
9	HDW_SCR_MBS_52001
10	HDW_SCR_MBS_52002

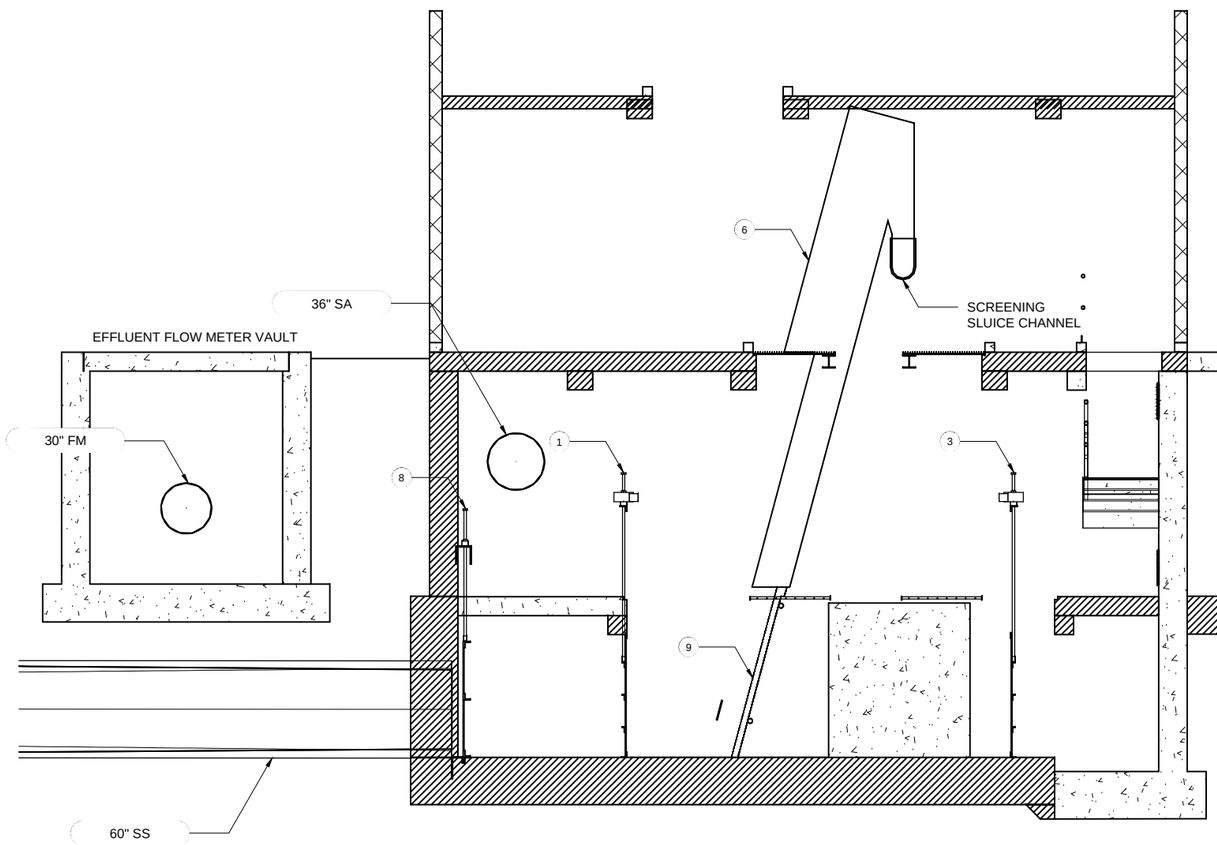

SECTION 1 / M-101-052

SCALE: 1/4" = 1'-0"

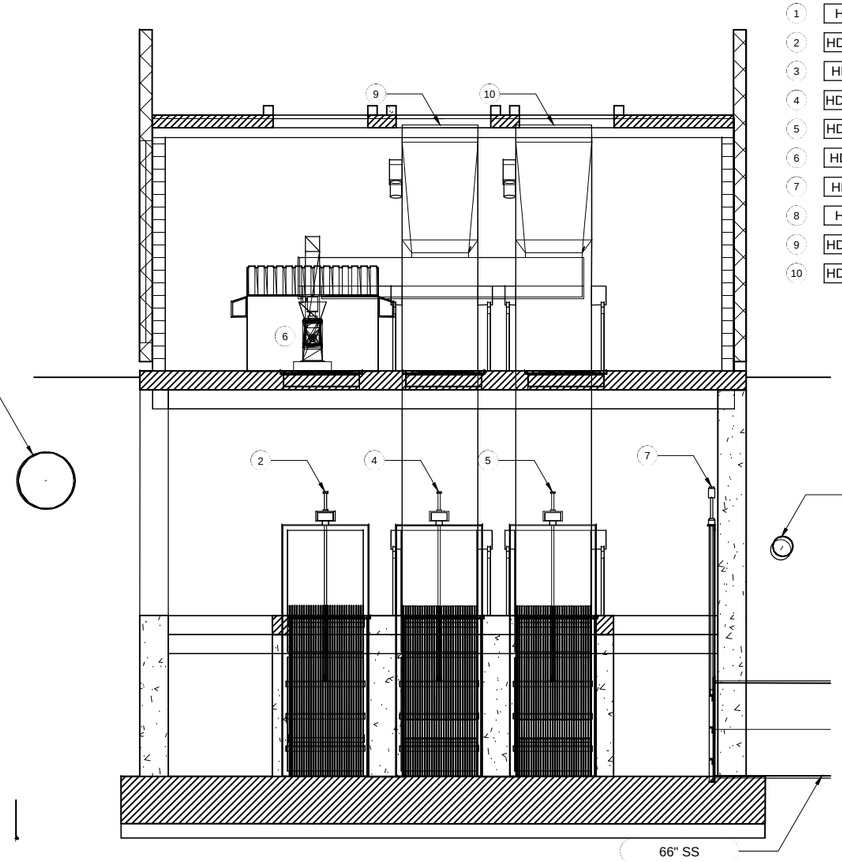

SECTION 2 / M-101-052

SCALE: 1/4" = 1'-0"

Path: P:\142000\142399 - SBSA Pump Station Predesign\CADD\2-SHEETS\M-MECHANICAL Filename: M-301-052.dwg Plot Date: January 13, 2015 - 12:47 PM CADD User: Burke, Fred

Brown AND Caldwell

WALNUT CREEK, CALIFORNIA

SUBMITTED: _____ DATE: _____
PROJECT MANAGER

APPROVED: _____ DATE: _____
BROWN AND CALDWELL

LINE IS 2 INCHES AT FULL SIZE (IF NOT 2" - SCALE ACCORDINGLY)

SCALE: AS SHOWN

DESIGNED: ENGINEER
DRAWN: DRAFTER
CHECKED: CHECKED
APPROVED: APPROVED

EXTERNAL REFERENCE FILES
142399-MF-02-Redwood City-Mechanical.dwg
142399-MF-02-Redwood City-Topo.dwg
142399-02-SC0001.dwg
142399-MF-02RC-S-NPS-LVL3-3D.dwg
142399-MF-02RC-S-SCRN-LVL1-3D.dwg
142399-MF-02RC-S-SCRN-LVL2-3D.dwg
142399-MF-02RC-S-NPS-LVL2-3D.dwg
142399-MF-02RC-S-NPS-LVL1-3D.dwg
142399-TB-redwood city.dwg

PRELIMINARY

THIS DRAWING IS NOT VALID FOR CONSTRUCTION PURPOSES UNLESS IT BEARS THE SEAL AND SIGNATURE OF A DULY REGISTERED PROFESSIONAL

CHARLES W. JOYCE
ENGINEER-IN-RESPONSIBLE CHARGE
C33166
CALIFORNIA REGISTRATION NUMBER

REVISIONS

ZONE	REV.	DESCRIPTION	BY	DATE	APP.

PUMP STATION 2 PRE-DESIGN

SVCW Silicon Valley Clean Water

MECHANICAL

PUMP STATION 2

SCREENINGS SECTIONS

FILENAME M-301-052.DWG
BC PROJECT NUMBER 142399
1/13/2015
DRAWING NUMBER **M-301-052**
SHEET NUMBER 52 OF 67

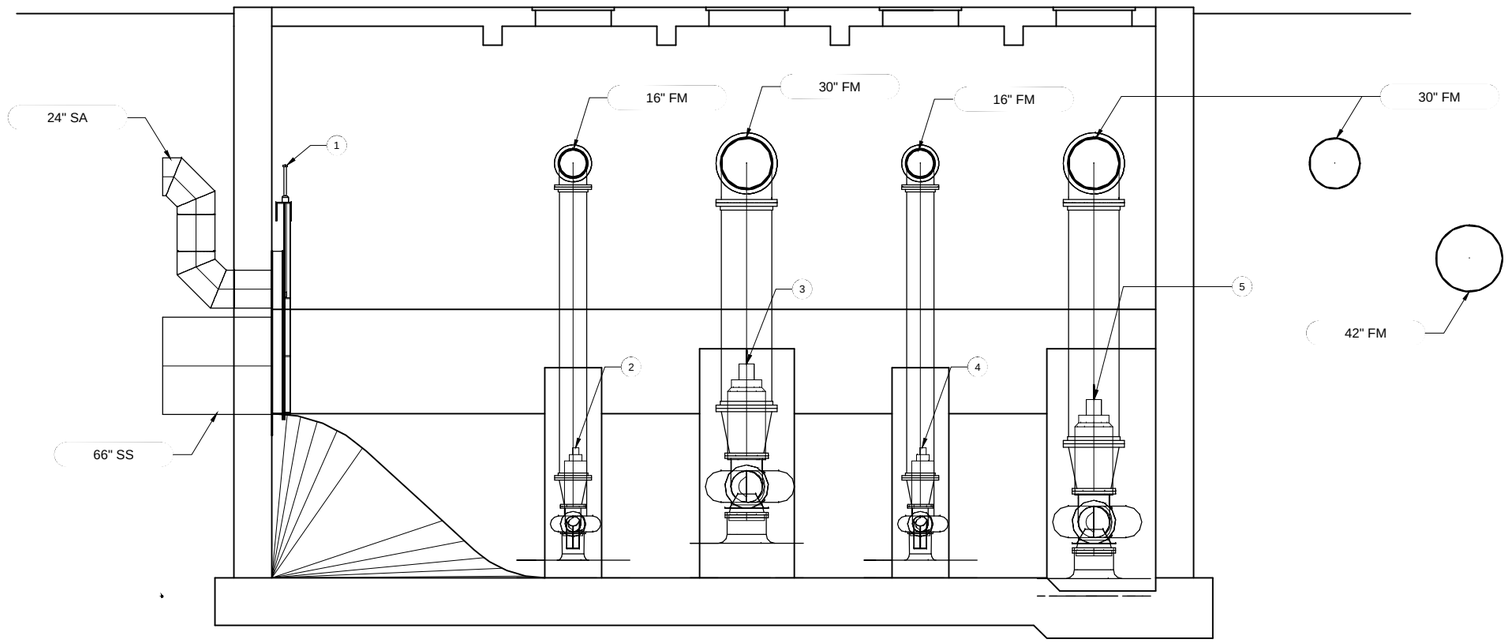

SECTION 1 / M-102-052

SCALE: 1/4" = 1'-0"

KEY NOTES:

1. PS2_INF_SG_52201
2. PS2_TRS-PMP-52201
3. PS2_TRS-PMP-052202
4. PS2_TRS-PMP-052203
5. PS2_TRS-PMP-52204

Brown AND Caldwell

WALNUT CREEK, CALIFORNIA

SUBMITTED: _____ DATE: _____
PROJECT MANAGER

APPROVED: _____ DATE: _____
BROWN AND CALDWELL

LINE IS 2 INCHES AT FULL SIZE (IF NOT 2" - SCALE ACCORDINGLY)

SCALE: AS SHOWN

DESIGNED: ENGINEER

DRAWN: DRAFTER

CHECKED: CHECKED

APPROVED: APPROVED

EXTERNAL REFERENCE FILES
142399-MF-02-Redwood City-Mechanical.dwg
142399-MF-02-Redwood City-Topo.dwg
142399-02-SC0001.dwg
142399-MF-02RC-S-NPS-LVL3-3D.dwg
142399-MF-02RC-S-SCRN-LVL1-3D.dwg
142399-MF-02RC-S-SCRN-LVL2-3D.dwg
142399-MF-02RC-S-NPS-LVL2-3D.dwg
142399-MF-02RC-S-NPS-LVL1-3D.dwg
142399-TB-redwood city.dwg

PRELIMINARY

THIS DRAWING IS NOT VALID FOR CONSTRUCTION PURPOSES UNLESS IT BEARS THE SEAL AND SIGNATURE OF A DULY REGISTERED PROFESSIONAL

CHARLES W. JOYCE
ENGINEER-IN-RESPONSIBLE CHARGE
C33166
CALIFORNIA REGISTRATION NUMBER

REVISIONS

ZONE	REV.	DESCRIPTION	BY	DATE	APP.

PUMP STATION 2 PRE-DESIGN

SVCW Silicon Valley Clean Water

MECHANICAL

PUMP STATION 2

WET WELL AND VALVE VAULT SECTION

FILENAME M-302-052.DWG

BC PROJECT NUMBER 142399

January 13, 2015

DRAWING NUMBER **M-302-052**

SHEET NUMBER 53 OF 67

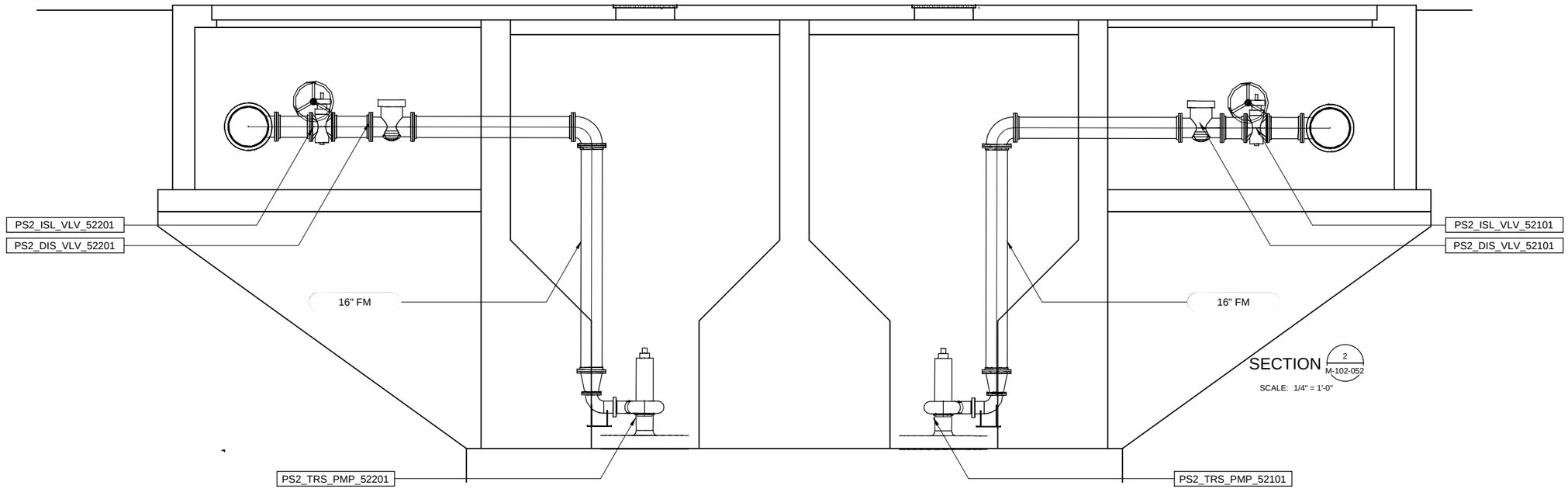

SECTION 2 M-102-052
SCALE: 1/4" = 1'-0"

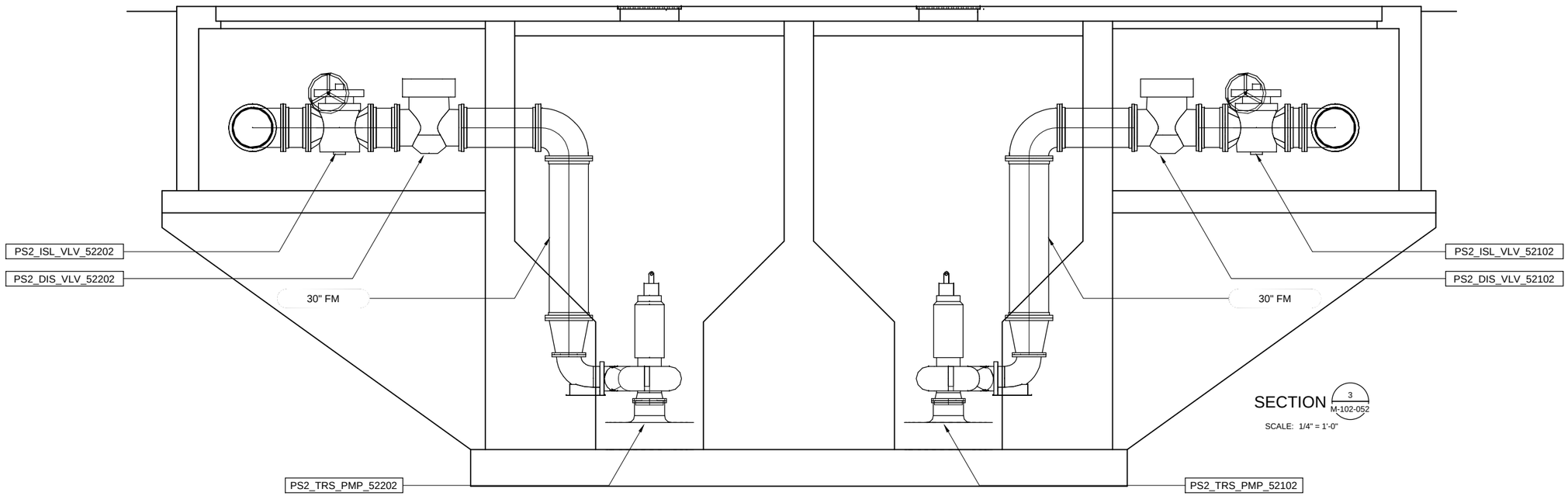

SECTION 3 M-102-052
SCALE: 1/4" = 1'-0"

Path: P:\142000\142399 - SBSA Pump Station Predesign\CADD\2-SHEETS\M-MECHANICAL Filename: M-303-052.dwg Plot Date: January 13, 2015 - 12:38 PM CADD User: Burke, Fred

Brown AND Caldwell
WALNUT CREEK, CALIFORNIA

SUBMITTED: _____ DATE: _____
PROJECT MANAGER
APPROVED: _____ DATE: _____
BROWN AND CALDWELL

LINE IS 2 INCHES AT FULL SIZE (IF NOT 2" - SCALE ACCORDINGLY)
SCALE: AS SHOWN
DESIGNED: ENGINEER
DRAWN: DRAFTER
CHECKED: CHECKED
APPROVED: APPROVED

EXTERNAL REFERENCE FILES
142399-MF-02-Redwood City-Mechanical.dwg
142399-MF-02-Redwood City-Topo.dwg
142399-02-SC0001.dwg
142399-MF-02RC-S-NPS-LVL3-3D.dwg
142399-MF-02RC-S-SCRN-LVL1-3D.dwg
142399-MF-02RC-S-SCRN-LVL2-3D.dwg
142399-MF-02RC-S-NPS-LVL2-3D.dwg
142399-MF-02RC-S-NPS-LVL1-3D.dwg
142399-TB-redwood city.dwg

PRELIMINARY

THIS DRAWING IS NOT VALID FOR CONSTRUCTION PURPOSES UNLESS IT BEARS THE SEAL AND SIGNATURE OF A DULY REGISTERED PROFESSIONAL

CHARLES W. JOYCE
ENGINEER-IN-RESPONSIBLE CHARGE
C33166
CALIFORNIA REGISTRATION NUMBER

REVISIONS

ZONE	REV.	DESCRIPTION	BY	DATE	APP.

PUMP STATION 2 PRE-DESIGN

SVCW Silicon Valley Clean Water

MECHANICAL
PUMP STATION 2

WET WELL AND VALVE VAULT SECTIONS

FILENAME M-303-052.DWG
BC PROJECT NUMBER 142399
January 13, 2015
DRAWING NUMBER **M-303-052**
SHEET NUMBER 54 OF 67

KEY NOTES:

1. SRG_FIL_COL_52001
2. SRG_FIL_COL_52002
3. SRG_REC_PMP_52001
4. SRG_REC_PMP_52002

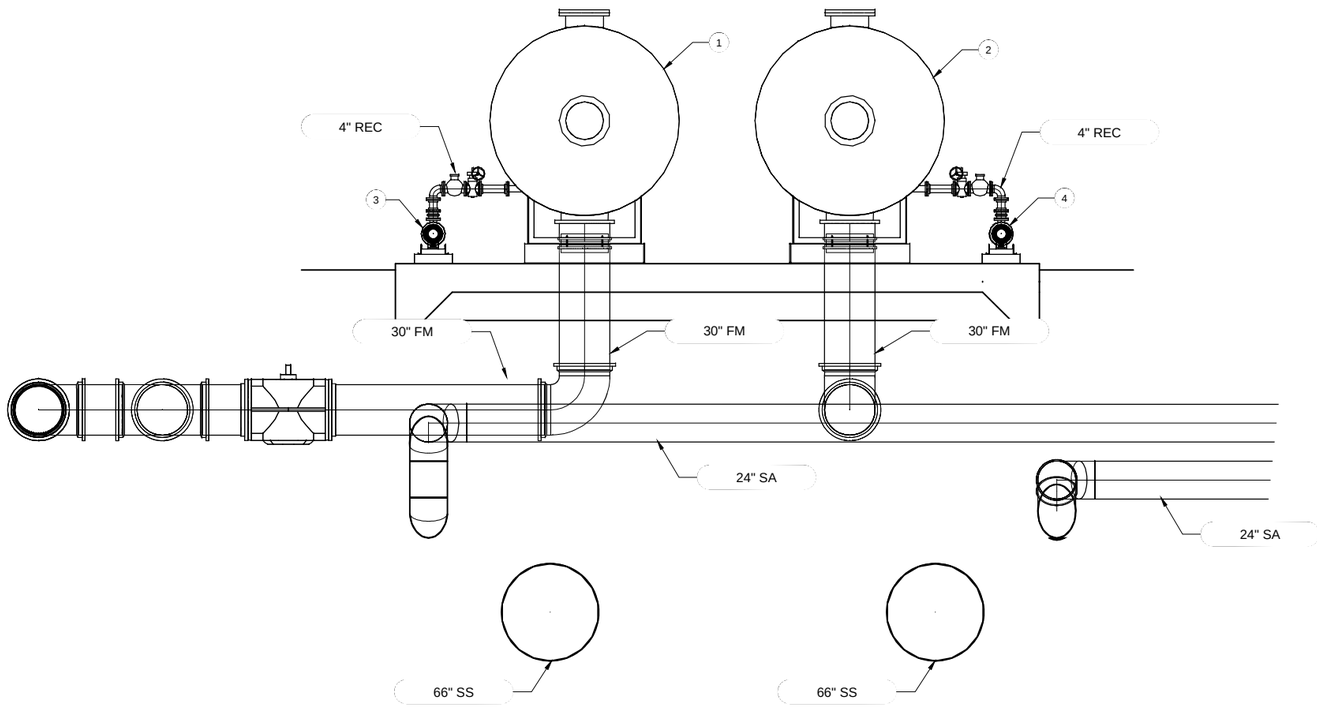

SECTION 1 / M-103-052

SCALE: ##############

Brown AND Caldwell
WALNUT CREEK, CALIFORNIA

SUBMITTED: _____ DATE: _____
PROJECT MANAGER

APPROVED: _____ DATE: _____
BROWN AND CALDWELL

LINE IS 2 INCHES AT FULL SIZE (IF NOT 2" - SCALE ACCORDINGLY)

SCALE: 1/4" = 1'-0"

DESIGNED: ENGINEER
DRAWN: DRAFTER
CHECKED: CHECKED
APPROVED: C. JOYCE

EXTERNAL REFERENCE FILES
142399-MF-02-Redwood City-Mechanical.dwg
142399-MF-02-Redwood City-Topo.dwg
142399-02-SC0001.dwg
142399-MF-02RC-S-NPS-LVL3-3D.dwg
142399-MF-02RC-S-SCRN-LVL1-3D.dwg
142399-MF-02RC-S-SCRN-LVL2-3D.dwg
142399-MF-02RC-S-NPS-LVL2-3D.dwg
142399-MF-02RC-S-NPS-LVL1-3D.dwg
142399-TB-redwood city.dwg

PRELIMINARY

THIS DRAWING IS NOT VALID FOR CONSTRUCTION PURPOSES UNLESS IT BEARS THE SEAL AND SIGNATURE OF A DULY REGISTERED PROFESSIONAL

CHARLES W. JOYCE
ENGINEER-IN-RESPONSIBLE CHARGE
C33166
CALIFORNIA REGISTRATION NUMBER

REVISIONS

ZONE	REV.	DESCRIPTION	BY	DATE	APP.

PUMP STATION 2 PRE-DESIGN

SVCW Silicon Valley Clean Water

MECHANICAL
PUMP STATION 2

SURGE CONTROL SECTION

FILENAME M-304-052.DWG
BC PROJECT NUMBER 142399
January 13, 2015
DRAWING NUMBER **M-304-052**
SHEET NUMBER 55 OF 67

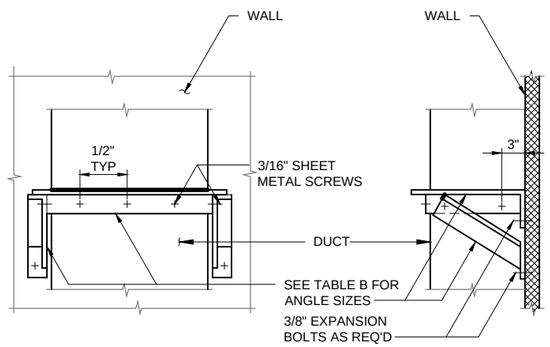

TABLE B	
DIMENSIONS, INCHES	
MAX DUCT	ANGLE
LESS THAN 60	1-1/2 x 1-1/2 x 1/8
60-72	2 x 2 x 1/8
>72	SPECIAL DESIGN REQUIRED

VERTICAL DUCT SUPPORT AT WALL

DETAIL A / MH-001-052

NO SCALE

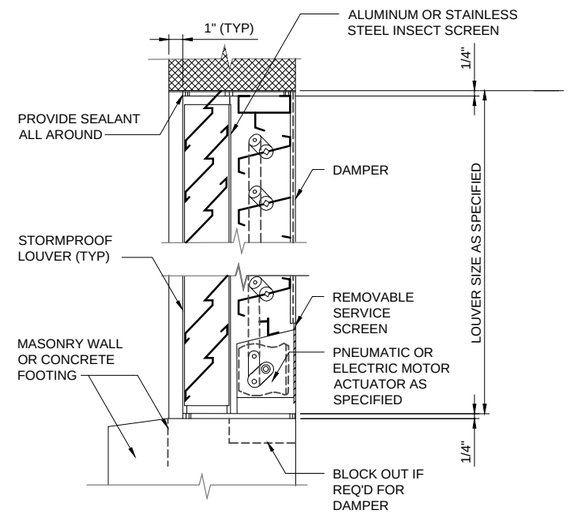

LOUVER AND DAMPER MOUNTING

DETAIL B / MH-001-052

NO SCALE

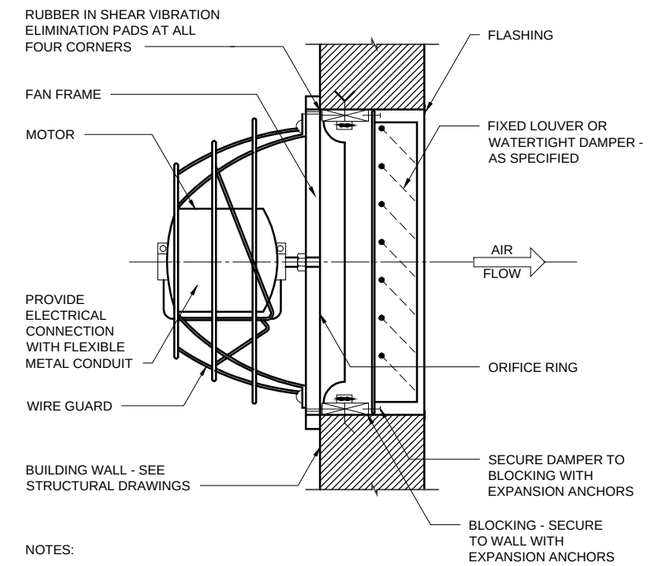

NOTES:

1. MOTOR SHALL BE RIGIDLY SUPPORTED FROM FAN HOUSING AND SHALL NO BE ATTACHED TO THE WIRE FAN GUARD.
2. SUPPLY AIR FAN MOUNTING SIMILAR.

WALL EXHAUST FAN MOUNTING

DETAIL C / MH-001-052

NO SCALE

Brown AND Caldwell

WALNUT CREEK, CALIFORNIA

SUBMITTED: _____ DATE: _____
PROJECT MANAGER

APPROVED: _____ DATE: _____
BROWN AND CALDWELL

LINE IS 2 INCHES AT FULL SIZE (IF NOT 2" - SCALE ACCORDINGLY)

SCALE: AS SHOWN

DESIGNED: ENGINEER
DRAWN: DRAFTER
CHECKED: CHECKED
APPROVED: APPROVED

PRELIMINARY

THIS DRAWING IS NOT VALID FOR CONSTRUCTION PURPOSES UNLESS IT BEARS THE SEAL AND SIGNATURE OF A DULY REGISTERED PROFESSIONAL

ENGINEER-IN-RESPONSIBLE CHARGE

CALIFORNIA REGISTRATION NUMBER

REVISIONS

ZONE	REV.	DESCRIPTION	BY	DATE	APP.

PUMP STATION 2 PRE-DESIGN

SVCW Silicon Valley Clean Water

HVAC

PUMP STATION 2

STANDARD DETAILS

FILENAME MH-001-052.DWG
BC PROJECT NUMBER 142399
1/13/2015
DRAWING NUMBER **MH-001-052**
SHEET NUMBER 56 OF 100

Path: P:\142000\142399 - SBSA Pump Station Predesign\CADD\2-SHEETS\H-HVAC Filename: MH-001-052.dwg Plot Date: January 13, 2015 - 12:47 PM CADD User: Burke, Fred

XREF: 142399-FB-Standard Details_PS2.dwg

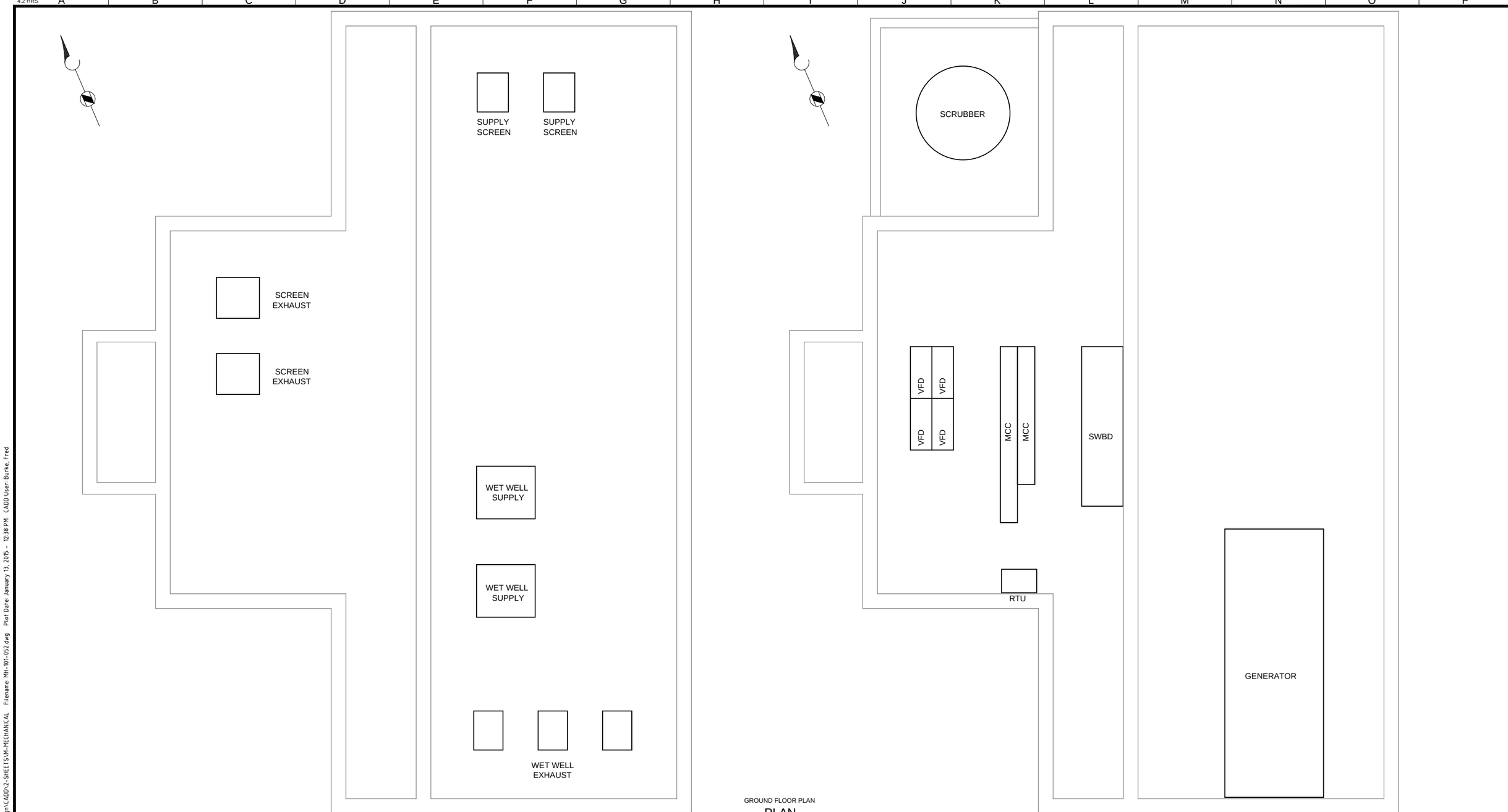

GROUND FLOOR PLAN
PLAN
SCALE: 1/4" = 1'-0"

Brown AND Caldwell
WALNUT CREEK, CALIFORNIA

SUBMITTED: _____ DATE: _____
PROJECT MANAGER
APPROVED: _____ DATE: _____
BROWN AND CALDWELL

LINE IS 2 INCHES AT FULL SIZE (IF NOT 2" - SCALE ACCORDINGLY)
SCALE: AS SHOWN
DESIGNED: ENGINEER
DRAWN: DRAFTER
CHECKED: CHECKED
APPROVED: APPROVED

EXTERNAL REFERENCE FILES
142399-TB-redwood city.dwg

PRELIMINARY

THIS DRAWING IS NOT VALID FOR CONSTRUCTION PURPOSES UNLESS IT BEARS THE SEAL AND SIGNATURE OF A DULY REGISTERED PROFESSIONAL

CHARLES W. JOYCE
ENGINEER-IN-RESPONSIBLE CHARGE
C33166
CALIFORNIA REGISTRATION NUMBER

REVISIONS

ZONE	REV.	DESCRIPTION	BY	DATE	APP.

PUMP STATION 2 PRE-DESIGN

SVCW Silicon Valley Clean Water

MECHANICAL
PUMP STATION 2

GROUND FLOOR AND MOTOR ROOM PLANS

FILENAME
MH-101-052.DWG
BC PROJECT NUMBER
142399
January 13, 2015
DRAWING NUMBER
MH-101-052
SHEET NUMBER
57 OF 67

RACEWAYS

HH23 — MANHOLE (MH), HANDHOLE (HH), PULLBOX (PB)

JB1900 — JUNCTION BOX. OPTIONAL IDENTIFIER

TB-1301 — TERMINAL BOX. OPTIONAL IDENTIFIER

PBD-1900-1,3,5 — HOME RUN EXPOSED - SEE PANELBOARD, SWITCHBOARD, OR MCC SCHEDULE FOR CIRCUIT INFORMATION

EXAMPLE: HOME TO PANELBOARD PBD-1900, CIRCUITS 1, 3, AND 5

PBD-1900-1,3,5 — HOME RUN CONCEALED - SEE PANELBOARD, SWITCHBOARD, OR MCC SCHEDULE FOR CIRCUIT INFORMATION.

EXAMPLE: HOME TO PANELBOARD PBD-1900, CIRCUITS 1, 3, AND 5

CABLE TRAY MODIFIERS:
CTS - 24VDC OR LESS
CTC - 120V CONTROL CONDUCTORS
CTP - 600V POWER CONDUCTORS

CABLE #4/0 AND LARGER SHALL NOT BE STACKED VERTICALLY

WHEN TWO TRAY MODIFIERS IDENTIFY A SINGLE TRAY, THE CONTRACTOR MAY USE DIVIDER OR INSTALL SEPARATE TRAYS (CTC/CTS)

CABLE TRAY WITH COVER MODIFIER, AS ABOVE

P 05P1100 — RACEWAY IDENTIFIER

RACEWAY EXPOSED
MODIFIERS FOR RACEWAY TYPE:
H - POWER (ABOVE 600V)
P - POWER
C - CONTROL
S - SIGNAL
D - DATA
F - FIBER OPTIC
PC - POWER AND CONTROL
X - SPARE

RACEWAY CONCEALED

RACEWAY TURNED TOWARD THE THE VIEWER

RACEWAY TURNED DOWN

CONDUIT CAPPED

DB 05P1100 — DUCT BANK IDENTIFIER (OPTIONAL)

DB — DUCT BANK, DIRECT BURIED

CDB — DUCT BANK, CONCRETE ENCASED

RC — DUCTBANK, REINFORCED CONCRETE ENCASED

OHE — OVERHEAD POWER LINE

DISTRIBUTION EQUIPMENT

APPROXIMATE SHAPE AND SCALE REPRESENTED WHERE POSSIBLE. HOWEVER, EXACT SIZE AND NUMBER OF SECTIONS IS ESTIMATED

FLOOR-STANDING DISTRIBUTION ASSEMBLY, SUCH AS A SWITCHBOARD, TRANSFORMER, OR MOTOR CONTROL CENTER

MCC-1200 — EQUIPMENT DESIGNATION (EXAMPLE)

WALL-MOUNTED DISTRIBUTION ASSEMBLY, SUCH AS PANELBOARD, MOTOR STARTER PANEL, OR TERMINAL CABINET

PBD-1900 — EQUIPMENT DESIGNATION (EXAMPLE)

LIGHTING

FIXTURE IDENTIFIER:

NUMBER OF FIXTURES (SHOWN ONLY WHEN REQUIRED FOR CLARITY)

FIXTURE TYPE. TYPE APPLIES TO ALL FIXTURES OF THE SAME SHAPE WITHIN A ROOM OR AREA.

5 XX 2/40 R PC 8'-6"

MOUNTING:
L = POLE R = RECESSED
G = GROUND S = SURFACE
P = PENDANT W = WALL

MOUNTING HEIGHT, FLOOR TO BOTTOM OF FIXTURE UON. AHAP= AS HIGH AS POSSIBLE. AD= ABOVE DOOR.

NUMBER OF LAMPS/LAMP WATTAGE

CONTROL: PHOTOCELL, SWITCH, CONTACTOR

LIGHTING FIXTURE SHAPES AND SCALE ARE REPRESENTED WHERE POSSIBLE. THE EXAMPLES SHOWN BELOW ARE TYPICAL APPLICATIONS

RECESSED FLUORESCENT FIXTURE

SUSPEND PENDANT MOUNTED FIXTURE

SURFACE MOUNTED FIXTURE

NS — EMERGENCY LIGHTING FIXTURES, FIXTURES WITH EMERGENCY BALLAST'S, AND FIXTURES IDENTIFIED WITH AN 'NS' SHALL BE PROVIDED WITH NON-SWITCHED POWER SOURCE

E — FLUORESCENT FIXTURE WITH EMERGENCY BATTERY PACK

LIGHT FIXTURE

WALL MOUNTED FIXTURE

DIRECTIONAL LIGHT

POLE MOUNTED AREA LIGHT

EMERGENCY LIGHTING UNIT SELF CONTAINED

LIGHTING CONTINUED

EXIT LIGHTS:

SURFACE ON CEILING

WALL MOUNTED

WITH DIRECTIONAL ARROWS

3a — CIRCUIT IDENTIFIER: WHEN SHOWN ADJACENT TO FIXTURE IDENTIFIES CIRCUIT NUMBER AND SWITCH. EXAMPLE: CIRCUIT 3, CONTROLLED BY SWITCH a

PC — PHOTO CELL

OS — OCCUPANCY SENSOR

WIRING DEVICES

SWITCHES:

UNLESS OTHERWISE NOTED, ALL SWITCHES ARE WALL MOUNTED

$ — TOGGLE SWITCH, SINGLE POLE

$$ — GANGED SWITCHES IN COMMON BOX WITH COMMON WALL PLATE

$a 3 — SUPERSCRIPT INDICATES CIRCUIT CONTROLLED: a, b, c, ETC. MAY BE COMBINED WITH CIRCUIT NUMBER. EXAMPLE: 1a, 4b, ETC

SUBSCRIPT MODIFIER INDICATES:
2 = DOUBLE POLE
3 = THREE WAY
4 = FOUR WAY
K = KEY OPERATED
MC = MOMENTARY CONTACT, THREE POSITION
MS = MANUAL (MOTOR) STARTER OR SWITCH WITH OVERLOADS
R = RHEOSTAT (DIMMER, SPEED CONTROL)
O = OCCUPANCY SWITCH
D DIMMER

RECEPTACLES:

DUPLEX RECEPTACLE

WP — RECEPTACLE MODIFIERS:
WP = WEATHER PROOF

GFI = GROUND FAULT CIRCUIT INTERRUPTER

H = HAZARDOUS AREA-EXPLOSION PROOF

EXPLOSION PROOF, CLASS 1, DEAD FRONT, 45° ANGLE, TWO GANG

RECESSED FLOOR RECEPTACLE-- ANY RECEPTACLE INSIDE A SQUARE

SURFACE FLOOR RECEPTACLE-- ANY RECEPTACLE INSIDE A TRIANGLE

GANGED RECEPTACLES--IN COMMON BOX, WITH COMMON WALL PLATE

C — RECEPTACLE, CLOCK HANGER

RECEPTACLE, DUPLEX ON EMERGENCY

480V RECEPTACLE

GROUNDING

GROUND ROD

GROUND ROD WITH GROUND WELL

GROUND CONNECTION, COMPRESSION TYPE, EXOTHERMIC. SEE SPECIFIC

G — GROUNDING CONDUCTOR

GROUND CONNECTION

GROUND CONNECTION TO STRUCTURAL REINFORCEMENT

LIGHTNING ROD/AIR TERMINAL

MOTORS AND EQUIPMENT

MOTOR STARTER, INDIVIDUAL. NOT LOCATED IN AN MCC OR SIMILAR GROUP ASSEMBLY

COMBINATION MOTOR STARTER. NOT LOCATED IN AN MCC OR SIMILAR GROUP ASSEMBLY

60 — DISCONNECT SWITCH, NON-FUSED EXAMPLE: 60 AMP

F 100/2/80 — DISCONNECT SWITCH, FUSED EXAMPLE: 100 AMP, 2P, 80 AMP FUSES

M — MOTOR

SV — SOLENOID VALVE

H — HEATER

T — THERMOSTAT

WH — WATER HEATER

FIELD INSTRUMENT

LOCAL CONTROL STATION

LCP-0001 — EQUIPMENT DESIGNATION

CONTROL PANEL, VFD, RVSS, APPROXIMATE SHAPE AND SCALE.

AREA IDENTIFICATION

CI-D1 — HAZARDOUS AREA CLASSIFICATION

CI-D2 — HAZARDOUS AREA CLASSIFICATION

TELEPHONE & COMMUNICATION SYSTEMS

UNLESS OTHERWISE NOTED, TELEPHONE OUTLETS SHALL BE MOUNTED AT SAME HEIGHT AS THE RECEPTACLES. VERIFY

A — EXTERNAL LINE OR PLANT PHONE SYSTEM OUTLET

OPTIONAL MODIFIERS:
A = ATTENDANT'S CONSOLE
F = FUTURE INSTRUMENT
J = JACK, PLUG-IN TYPE
W = WALL INSTRUMENT

BELL

D — OUTLET, DATA COMMUNICATION

SECURITY CAMERA

SPEAKER

H — AUDIBLE HORN

B — STROBE LIGHT (BLUE SHOWN)

CS — ELECTRONIC CARD SWIPE

SD — SMOKE DETECTOR

R — RATE-OF-RISE DETECTOR

CIRCUIT IDENTIFICATION

MODIFIER
EQUIPMENT NUMBER
SUFFIX

X XXXXXXX -A

NOTE:

MODIFIERS FOR CABLE TYPE INCLUDE:
H - POWER (ABOVE 600V)
P - POWER
C - CONTROL
S - SIGNAL
D - DATA
F - FIBER OPTIC
PC - POWER AND CONTROL
X - SPARE

SUFFIX:
A - LETTER TO CREATE UNIQUE ID

EXAMPLE 1: P101-1: 3 #2/0, #6G, 2"C	FOR CIRCUIT P101: THREE NO, 2/0 CONDUCTORS, ONE NO. 6 AWG GROUND WIRE IN A 2" CONDUIT
EXAMPLE 2: SES-2: 2[3 #1/0, #6G, 1 1/2"C]	FOR SES-2: TWO PARALLEL RUNS OF THREE NO. 1/0 CONDUCTORS, ONE NO. 6 AWG GROUND IN 1 1/2" CONDUIT
EXAMPLE 3: C111: 2-1 PR #16S, 1"C	FOR CONTROL CIRCUIT: TWO SIGNAL CABLES OF #16 AWG TWISTED SHIELDED PAIR IN 1" C.
VND, 1"C	VENDOR CABLE, 1"C (CONDUIT BY CONTRACTOR) TYP

GENERAL NOTES:

1. SYMBOLS AND ABBREVIATION DRAWINGS ARE GENERAL IN NATURE. SOME SYMBOLS SHOWN HEREON MAY NOT BE USED ON THE CONTRACT DRAWINGS.
2. SYMBOLS ARE ARRANGED ON SPECIFIC DRAWINGS AND IN CATEGORIES FOR CONVENIENCE ONLY; SYMBOLS MAY BE USED ON ANY OF THE CONTRACT DRAWINGS.
3. IDENTIFICATIONS (ID), SIZES, RATINGS, LOCATIONS AND SIMILAR INFORMATION SHOWN ASSOCIATED WITH SYMBOLS ARE OPTIONAL; EXAMPLES OF SUCH INFORMATION ARE SHOWN WITH SOME SYMBOLS FOR CLARITY

CONTROL DIAGRAM SYMBOLS

GENERAL

CONDUCTORS CONNECTED

CONDUCTORS NOT CONNECTED

TERMINAL POINT FOR EXTERNAL CONNECTIONS

EXISTING EQUIPMENT (SCREENED)

INDICATING LIGHTS

INDICATING LIGHTS

L = LENS COLOR:
- A = AMBER
- B = BLUE
- G = GREEN
- R = RED
- W = WHITE

PUSH TO TEST. TEST VOLTAGE TERMINAL SHOWN

PUSHBUTTONS

HS–XXXX — PUSHBUTTON, MOMENTARY CONTACT, NORMALLY OPEN

HS-XXXX — PUSHBUTTON, MOMENTARY CONTACT, NORMALLY CLOSED

HS–XXXX — PUSHBUTTON WITH MUSHROOM HEAD, EMERGENCY STOP,

SELECTOR SWITCHES

HS-XXXX (1, 2, OX)
2 POSITION MAINTAINED CONTACT
X = CONTACTS CLOSED
O = CONTACTS OPEN

HS-XXXX (1, 2, XO, OX)
2 POSITION
SPRING RETURNED TO RIGHT
O = CONTACTS OPENED
X = CONTACTS CLOSED

HS-XXXX (H, O, A, OXO, XOO)
3 POSITION MAINTAINED CONTACT
X = CONTACTS CLOSED
O = CONTACTS OPENED

CONTROL RELAYS

FUNCTION — OPERATING COIL
- CR = CONTROL RELAY
- U = UNLATCH
- L = LATCH

OL — OVERLOAD RELAY

CR2 (LINE) CR2 (LINE) — OUTPUT CONTACTS. LINE NUMBER OF RELAY COIL SHOWN (OPTIONAL)

INPUT SWITCHES

NORMALLY OPEN	NORMALLY CLOSED	INITIATING VARIABLE
SS	SS	SPEED
TS	TS	TEMPERATURE
WS	WS	FORCE OR TORQUE
ZS	ZS	POSITION (LIMIT)
FS	FS	FLOW
LS	LS	LEVEL
PS	PS	PRESSURE

TIMING RELAYS

OPERATING COIL

ON or OFF DELAY
RANGE:SEC/MIN
SET:SEC/MIN

NORMALLY OPEN	NORMALLY CLOSED	
TR3 (LINE) OR TC	TR3 (LINE) OR TO	DELAY ON COIL ENERGIZATION (ON DELAY)
TR3 (LINE) OR TO	TR3 (LINE) OR TC	DELAY ON COIL DE-ENERGIZATION (OFF DELAY)

CONTACTORS

OPERATING COILS
- C = CONTACTOR, LIGHTING OR GENERAL USE
- F = FAST OR FORWARD
- M = MAIN OR LINE
- 1M = FIRST MAIN OR WYE
- 2M = SECOND MAIN OR DELTA
- R = RUN OR REVERSE
- S = SLOW OR START
- IC = ISOLATION CONTROL

MAIN CONTACTS

MAIN CONTACTS AIR BREAK, NEMA SIZE OPTIONAL

M, SIZE 3 — VACUUM CONTACTOR, NEMA SIZE OPTIONAL.

MISCELLANEOUS

FU 2B, 15 AMP — FUSE WITH SIZE AND OPTIONAL IDENTIFICATION

FU 3/15 AMP — FUSE WITH BLOWN FUSE INDICATOR

480V, 250VA, 120V — CONTROL TRANSFORMER PRIMARY AND SECONDARY SHOWN SIZE AS SHOWN OR AS SPECIFIED

50/5 (3) — CURRENT TRANSFORMER. PRIMARY TURNS RATIO SHOWN (OPTIONAL)

250 OHM RES — RESISTOR

RECTIFIER

SURGE OR ARC SUPPRESSOR

KVAR — CAPACITOR

CONNECTOR

XX — INCOMING LINE POWER SUPPLY

DRAWOUT MECHANISM

SOLENOID VALVE

BUS DUCT

GROUND CONNECTION

POTENTIOMETER

METER WITH ALPHA IDENTIFIERS:
- H = ELAPSED TIME
- A = AMMETER
- V = VOLTMETER

BATTERY

SHIELDED CABLE

LOCATED IN FIELD

AC TERMINAL BLOCK

DC TERMINAL BLOCK

XX — PLC I/O POINTS
- DO = DIGITAL OUT SIGNAL
- DI = DIGITAL IN SIGNAL
- AO = ANALOG OUT SIGNAL
- AI = ANALOG IN SIGNAL

ONE LINE DIAGRAM SYMBOLS

TRIP / FRAME / 52 — POWER CIRCUIT BREAKER (AIR, OIL, OR GAS) FRAME AND TRIP SETTING AND OPTIONAL I.D. SHOWN

TRIP / FRAME / LSIG — CIRCUIT BREAKER WITH ADJUSTABLE ELECTRONIC TRIP OVER BREAKER FRAME SIZE. SOLID STATE TRIP FEATURES SHOWN:
- L = LONG DELAY
- S = SHORT DELAY
- I = INSTANTANEOUS
- G = GROUND FAULT

SIZE / TYPE — CIRCUIT BREAKER (TYPE: MCP = MOTOR CIRCUIT PROTECTOR OR 3P = 3-POLE THERMAL MAGNETIC TRIP

30A, 3P, CLF — FUSED SWITCH: FUSE RATING AND POLES SHOWN
MODIFIERS:
- CLF = CURRENT LIMITING FUSE
- DE = DUAL ELEMENT
- F = CLASS F
- E = E RATED

100F — FUSE. 100 AMP CLASS "F" SHOWN

ATS # 60A, 3P — POWER TRANSFER SWITCH. DESIGNATION, AMP RATING AND CONFIGURATION SHOWN

MTS = MANUAL TRANSFER SWITCH
ATS = AUTOMATIC TRANSFER SWITCH
SUSE= SUITABLE FOR USE AS SERVICE ENTRANCE

AIR BREAK CONTACTOR, FVNR
U.O.N. NEMA SIZE 1 INDICATED
- FVR = FULL VOLTAGE, REVERSING STARTER
- 2S2W = TWO SPEED, TWO WINDING STARTER

METERING (ANSI/IEEE FUNCTIONS AS SPECIFIED)

POWER MONITOR (PM) POWER QUALITY MONITOR (HARMONIC ANALYSIS) (PQM) MOTOR MONITOR AND PROTECTION RELAY (MPR) FEEDER PROTECTION RELAY (FPR)

5 KVA — PACKAGED EQUIPMENT OR NON-MOTOR LOAD. KVA, KW, AMPS AS NOTED.

XXHP ##AMPS — VARIABLE FREQUENCY DRIVE, (VFD) NORMAL DUTY UON. HP IS INDICATED IF DIFFERENT THAN DRIVEN LOAD HP.
##AMPS=RATED CONTINUOUS AMPS

RVSS — REDUCED VOLTAGE SOLID STATE STARTER

SPD — SURGE PROTECTION DEVICE

64 N 3 — ANSI C37.2 DEVICE. QUANTITIES SHOWN.

600kW, 480V, 60 Hz, 3ph, 4w — GENERATOR WITH WINDING CONFIGURATION VOLTAGE, POWER, FREQUENCY SHOWN. POWER FACTOR OPTIONAL

5 — MOTOR, HORSEPOWER SHOWN

55 KVAR — POWER FACTOR CORRECTION CAPACITOR. KVAR RATING INDICATED

POTHEAD

STRESS CONE

INDICATES THAT ALL OR PART OF CONDUIT MAYBE ROUTED IN DUCT BANK OR UNDERGROUND

PORTABLE CABLE

CABLE BUS

BUS CONDUCTOR

CABLE CONDUCTOR

SURGE ARRESTOR

LIGHTNING ARRESTOR AND GROUND

TEST DEVICE

200A — DISCONNECT OR ISOLATING SWITCH. 200 AMP SHOWN

480 V, 30KVA, 5% Z, 208/120V — POWER TRANSFORMER. VOLTAGES, SIZE, IMPEDANCE SHOWN

1.5 KVA, 480 V, 2.5% Z, 480 V — ISOLATION TRANSFORMER. VOLTAGES, SIZE, IMPEDANCE SHOWN

3, 480V - 120V — POTENTIAL TRANSFORMER. PT QUANTITY (3) AND VOLTAGES SHOWN

250/5, 3 — CURRENT TRANSFORMER. CT QUANTITY AND 250:5 TURNS RATIO SHOWN

WINDING CONFIGURATIONS:
- DELTA
- WYE (GROUNDED)
- K — KIRK KEY INTERLOCK

50 AMP/ 10 SEC, GDR — NEUTRAL GROUNDING RESISTOR. AMPS/TIME RATING SHOWN

Brown AND Caldwell
WALNUT CREEK, CALIFORNIA

SUBMITTED: _____ DATE: _____ (PROJECT MANAGER)
APPROVED: _____ DATE: _____ (BROWN AND CALDWELL)

LINE IS 2 INCHES AT FULL SIZE (IF NOT 2" - SCALE ACCORDINGLY)
SCALE: NO SCALE
DESIGNED: RJM
DRAWN: RJM
CHECKED: CHECKED
APPROVED: APPROVED

EXTERNAL REFERENCE FILES
142399-TB-redwood city.dwg
142399-ME-01-E0002.dwg

PRELIMINARY

THIS DRAWING IS NOT VALID FOR CONSTRUCTION PURPOSES UNLESS IT BEARS THE SEAL AND SIGNATURE OF A DULY REGISTERED PROFESSIONAL

CHARLES W. JOYCE
ENGINEER-IN-RESPONSIBLE CHARGE
C33166
CALIFORNIA REGISTRATION NUMBER

REVISIONS

ZONE	REV.	DESCRIPTION	BY	DATE	APP.

PUMP STATION 2 PRE-DESIGN

SVCW Silicon Valley Clean Water

ELECTRICAL
PUMP STATION 2

LEGEND AND NOTES 2

FILENAME E-002-052.DWG
BC PROJECT NUMBER 142399
January 13, 2015
DRAWING NUMBER **E-002-052**
SHEET NUMBER 59 OF 67

Path: P:\142000\142399 - SBSA Pump Station Predesign\CADD\2-SHEETS\E-ELECTRICAL Filename: E-002-052.dwg Plot Date: January 13, 2015 - 12:38 PM CADD User: Burke, Fred

ABBREVIATIONS

NOTES:
1. ABBREVIATIONS SHOWN ON ELECTRICAL DRAWINGS ARE IN ACCORDANCE WITH ASME STANDARD Y14.38A
2. ABBREVIATIONS ON THIS SHEET ARE IN ADDITION TO THE ABBREVIATIONS DEFINED ON OTHER DRAWINGS.
3. ABBREVIATIONS HERE IN SHALL TAKE PRECEDENCE IN CASE OF CONFLICT.
4. ABBREVIATIONS ARE NOT EQUIPMENT NUMBERING PREFIXES LISTED ON OTHER DRAWINGS.

A, AMP	AMP(S), AMPERE(S)
AC	ALTERNATING CURRENT
AFF	ABOVE FINISHED FLOOR
AHAP	AS HIGH AS POSSIBLE
AIC	AMPS INTERRUPTING CAPACITY, SYMM.
AL	ALUMINUM
ARCH	ARCHITECT(URAL)
ASYM	ASYMMETRICAL
ATS	AUTOMATIC TRANSFER SWITCH
AUTO	AUTOMATIC
AUX	AUXILIARY
AWG	AMERICAN WIRE GAUGE
BC	BARE COPPER
BLDG	BUILDING
BOT	BOTTOM
C	CONDUCTOR, CONDUIT
CB	CIRCUIT BREAKER
CKT	CIRCUIT
CLG	CEILING
CM	CENTIMETERS
CND	CONDUIT
CNTL	CONTROL
C.O.	CONDUIT ONLY, SPARE
CONC	CONCRETE
CPT	CONTROL POWER TRANSFORMER
CT	CURRENT TRANSFORMER
CU	COPPER
DB	DUCT BANK, DIRECT BURIAL
DC	DIRECT CURRENT, DATA CABLE
DCU	DISTRIBUTED CONTROL UNIT
DET	DETAIL
DIAG	DIAGRAM
DISC	DISCONNECT
DWG	DRAWING
EA	EACH
EC	EMPTY CONDUIT
ECP	EQUIPMENT CONTROL PANEL
EDB	ELECTRICAL DUCTBANK
EG	ENGINE GENERATOR SET
EL	ELEVATION
ELEC	ELECTRIC(AL)
EMH	ELECTRICAL MANHOLE
EMER	EMERGENCY
ENCL	ENCLOSURE/ENCLOSED
EPB	ELECTRICAL PULLBOX
ETM	ELAPSED TIME METER
EP	EXPLOSION PROOF
EQUIP	EQUIPMENT
EX	EXISTING
FDR	FEEDER
FL	FLUORESCENT
FLA	FULL LOAD AMPS
FLEX	FLEXIBLE CONDUIT
F.O.	FAIL OPEN
FO	FIBER OPTIC
FUT	FUTURE
GDR	GROUNDING RESISTOR
GEC	GROUND ELECTRODE CONDUCTOR
GF	GROUND FAULT
GFI	GROUND FAULT INTERRUPTER
GND, G	GROUND
GRS	GALVANIZED RIGID STEEL
H	HIGH
HGT	HEIGHT
HH	HANDHOLE
HID	HIGH INTENSITY DISCHARGE
HMI	HUMAN MACHINE INTERFACE
HP	HORSEPOWER
HPS	HIGH PRESSURE SODIUM
HTR	HEATER
HV	HIGH VOLTAGE
HVAC	HEATING, VENTILATION, AND AIR CONDITIONING
HZ	HERTZ (CYCLES PER SECOND)
ICOM	NTERCOM
ID	INSIDE DIAMETER
IMC	INTERMEDIATE METAL CONDUIT
INCAND	INCANDESCENT
INTLK	INTERLOCK
INST	INSTANTANEOUS
I/O	INPUT-OUTPUT
IPB	INSTRUMENT PULLBOX
JB	JUNCTION BOX
KCMIL	1000 CIRCULAR MIL
KV	KILOVOLT
KVA	KILOVOLT-AMPERE
KVAR	KILOVOLT-AMPERE REACTIVE
KW	KILOWATT
KWH	KILOWATT-HOUR
L	LONG
LC	LIGHTING CONTACTOR
LCP	LOCAL CONTROL PANEL
LCS	LOCAL CONTROL STATION
LED	LIGHT EMITTING DIODE
LHH	LOW VOLTAGE HANDHOLE
LMH	LOW VOLTAGE MANHOLE
LP	LIGHTING PANEL
LT	LONG TIME
LTG	LIGHTING
LV	LOW VOLTAGE
M	METER
MA	MILLIAMPERE
MBS	MANUAL BYPASS SWITCH
MCC	MOTOR CONTROL CENTER
MCP	MOTOR CIRCUIT PROTECTOR
MPC	MINI POWER CENTER
MECH	MECHANICAL
MFR	MANUFACTURE(R)
MH	MANHOLE, METAL HALIDE
MIC	MICROPHONE
MIS	MANAGEMENT INFORMATION STATION
MISC	MISCELLANEOUS
MM	MILLIMETER
MMH	MEDIUM VOLTAGE MANHOLE
MOV	MOTOR OPERATED VALVES
MTS	MANUAL TRANSFER SWITCH
MV	MILLIVOLT, MEDIUM VOLTAGE
MVMC	MEDIUM VOLTAGE MOTOR CONTROL
N/A	NOT APPLICABLE
N.C.	NORMALLY CLOSED
NEUT, N	NEUTRAL NEUT,N
NF	NON-FUSED
NIC	NOT IN CONTRACT
N.O.	NORMALLY OPEN
NO.	NUMBER
NOM	NOMINAL
NP	NAMEPLATE
NTS	NOT TO SCALE
OC	ON CENTER
OCC	OPERATION CONTROL CENTER
OD	OUTSIDE DIAMETER
OH	OVERHEAD
OIS	OPERATOR INTERFACE STATION
OT	OIL TIGHT
OWS	OPERATOR WORKSTATION
P	POLE, PHASE
PBD	PANEL BOARD
PB	PUSHBUTTON, PULLBOX
PCP	PROCESS CONTROL PANEL
PF	POWER FACTOR
PH	PHASE
PLC	PROGRAMMABLE LOGIC CONTROLLER
PMM	POWER METERING MODULE
PNL	PANEL
PP	POWER PANEL
PQM	POWER QUALITY METER
PR	PAIR
PRI	PRIMARY
PT	POTENTIAL TRANSFORMER
PVC	POLYVINYL CHLORIDE
PWR	POWER
QSB	QUARTZ STANDBY
RCPT	RECEPTACLE
REF	REFERENCE
REQD	REQUIRED
RE STL	REINFORCING STEEL
RMS	ROOT MEAN SQUARE
RTD	RESISTANCE TEMPERATURE DETECTOR
RTU	REMOTE TERMINAL UNIT
RVSS	REDUCED VOLTAGE SOLID STATE STARTER
SA	SURGE ARRESTOR
SCR	SILICON CONTROLLED RECTIFIER
SD	SMOKE DETECTOR
SEC	SECONDARY
SEL	SELECTOR
SHH	SIGNAL HANDHOLE
SMH	SIGNAL MANHOLE
SPEC	SPECIFICATION
SPD	SURGE PROTECTION DEVICE
SPKR	SPEAKER
ST	SHORT TIME
STP	SHIELDED TWISTED PAIR
SUB	SUBSTATION
SW	SWITCH
SWBD	SWITCHBOARD
SWGR	SWITCHGEAR
SYMM	SYMMETRICAL
SYS	SYSTEM
TB	TERMINAL BOX
TEL	TELEPHONE
TEMP	TEMPERATURE
TFR	TRANSFORMER
TRI	TRIAD
TV	TELEVISION
TVSS	TRANSIENT VOLTAGE SURGE SUPPRESSOR
TYP	TYPICAL
U/G	UNDERGROUND
UON	UNLESS OTHERWISE NOTED
UPS	UNINTERRUPTABLE POWER SUPPLY
V	VOLT
VA	VOLTAMPERE
VAR	VOLTAMPERE REACTIVE
VC	VACUUM CONTACTOR
VCP	VENDOR CONTROL PANEL
VFD	VARIABLE FREQUENCY DRIVE
VND	VENDOR
W	WATT, WIRE, WIDE
W/	WITH
W/O	WITHOUT
WW	WIREWAY
WG	WITH GROUND
WP	WEATHERPROOF
XFMR	TRANSFORMER
XMTR	TRANSMITTER
XP	EXPLOSION PROOF
Z	IMPEDANCE

GENERAL NOTES:

1. THE ELECTRICAL DRAWINGS USE THE ONE LINE DIAGRAMS AND RISER DIAGRAMS AND PANEL SCHEDULES IN CONJUNCTION WITH SHOWING THE LOCATION OF THE ELECTRICAL/INSTRUMENTATION SOURCES AND LOADS/DEVICES SHOWN ON THE PLAN DRAWINGS TO DEPICT THE WORK. THE CONTRACTOR SHALL USE THESE DOCUMENTS TO DETERMINE AND PROVIDE THE NECESSARY RACEWAY AND WIRING SYSTEM FOR EACH CIRCUIT. ALL INDOOR RACEWAY SHALL BE RUN [IMBEDDED, EXPOSED] AND ROUTED BY THE CONTRACTOR, UNLESS OTHERWISE NOTED. THE TYPE OF RACEWAY AND WIRE USED SHALL BE AS SPECIFIED.
2. IF EQUIPMENT SUPPLIED BY MANUFACTURER HAS A LARGER LOAD THAN INDICTED ON THE SINGLE LINE DIAGRAM, THE CONSTRUCTION MANAGER SHALL BE NOTIFIED. THE CABLE, CONDUIT AND ELECTRICAL EQUIPMENT SHALL BE SIZED AS REQUIRED, TO ACCOMMODATE THE HIGHER VALUE.
3. IN AREAS WHERE THERE ARE OVERHEAD BRIDGE CRANES, HOISTS, ETS., OR WHERE EQUIPMENT IS LIFTED AND MOVED FOR MAINTENANCE OR REPLACEMENT, NO CONDUITS SHALL BE RUN OVERHEAD THAT WILL INTERFERE WITH THE OPERATION OF THE EQUIPMENT OR ACCESS TO EQUIPMENT.
4. THE LOCATION OF THE CONTROL STATIONS SHOWN ON THE PLAN DRAWINGS ARE DIAGRAMMATIC ONLY. THE ACTUAL LOCATION SHALL BE COORDINATED IN THE FIELD WITH THE CONSTRUCTION MANAGER AND ADJACENT EQUIPMENT SUCH AS PIPING, PROCESS EQUIPMENT, ETC.
5. THE CONTRACTOR SHALL COORDINATE WITH THE STRUCTURAL AND MECHANICAL DRAWINGS FOR CONDUIT STUB UP AND TERMINATION LOCATIONS.

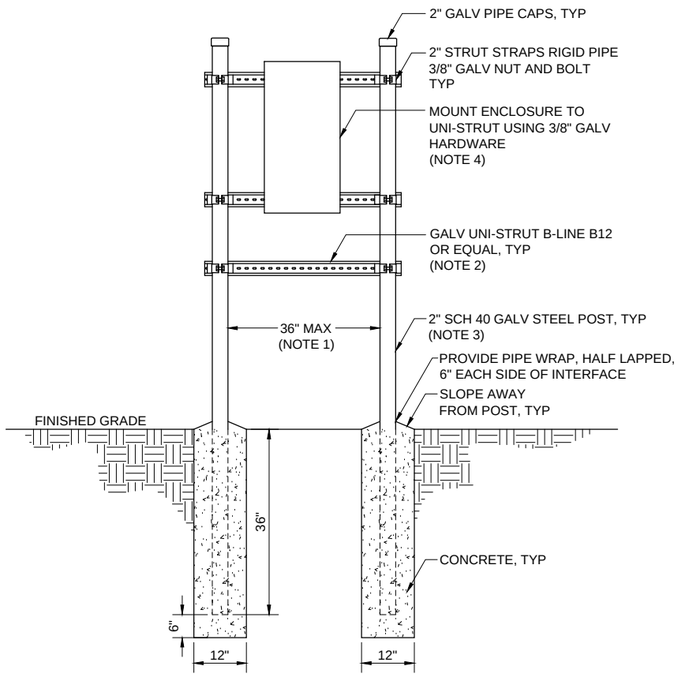

NOTES:

1. PROVIDE ADDITIONAL POSTS IF WIDER THAN 36".
2. PROVIDE ADDITIONAL UNI-STRUT AND HARDWARE FOR DIFFERENT EQUIPMENT SIZES AND TO SUPPORT CONDUITS.
3. PROVIDE 3" GRS POSTS FOR HEAVY EQUIPMENT OR IF SUPPORTING UTILITY EQUIPMENT.
4. MOUNT INDICATORS OR EQUIPMENT OPERATING HANDLES 4' ABOVE FINISHED GRADE OR PLATFORM.

TYPICAL EQUIPMENT RACK

DETAIL A/VAR

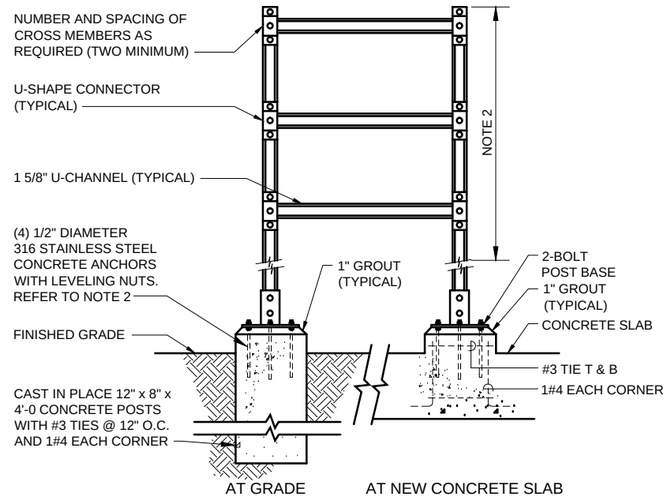

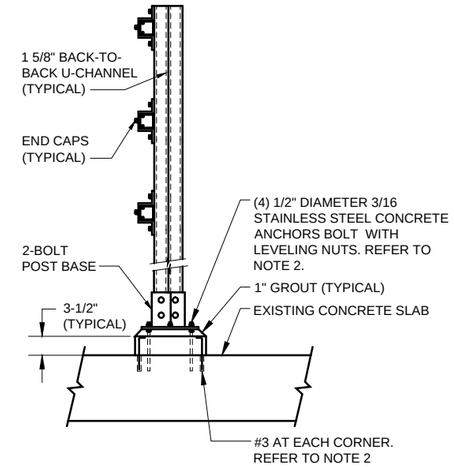

NOTES:

1. EQUIPMENT RACK SIZING:
   A. ARRANGE EQUIPMENT ON RACK SUCH THAT THE WIDTH OF THE RACK DOES NOT EXCEED 4'-0" MAX AND PROVIDES ROOM FOR CONDUITS, FITTINGS, AND SAFE OPERATION OF EQUIPMENT HANDLES.
   B. MOUNT INDICATORS OR EQUIPMENT OPERATING HANDLES 4' ABOVE FLOOR OR PLATFORM.
   C. PROVIDE 316 STAINLESS STEEL CHANNEL END-CAPS, AND FITTINGS.
2. REFER TO STRUCTURAL DRAWINGS AND SPECIFICATIONS FOR ANCHORAGE MATERIAL AND METHOD REQUIREMENTS.
3. MATERIAL AND HARDWARE PER SPECIFICATION DIVISION 16.

TYPICAL EQUIPMENT RACK

DETAIL B/VAR

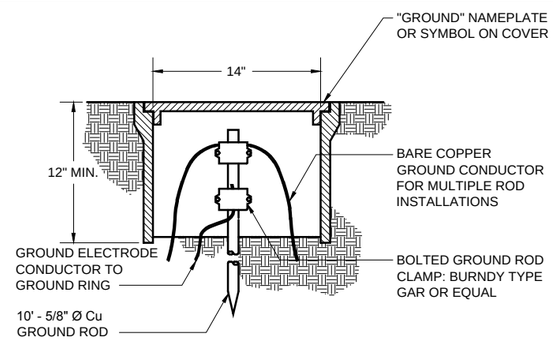

NOTES:

1. TEST WELL OF CONCRETE, PVC OR FRP MATERIAL.
2. H-20 LOAD RATED COVER FOR TEST WELL IN TRAFFIC AREA.

GROUND ROD/TEST WELL

DETAIL C/VAR

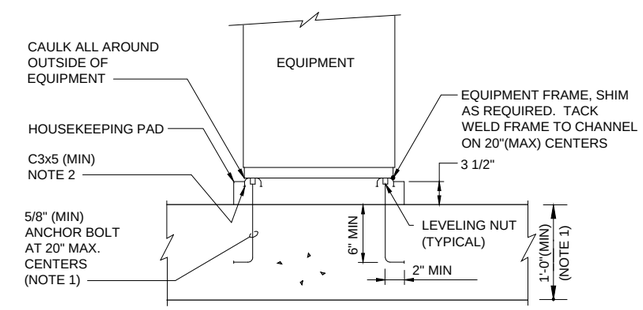

NOTES:

1. IF SLAB IS LESS THAN 12" THICK, ANCHOR BOLTS SHALL EXTEND THROUGH SLAB AND BE BACKED UP WITH 4" X 3/16" (MIN) SQUARE WASHERS.
2. CHANNELS SHALL BE LEVELED AT TIME CONCRETE IS CAST.
3. USE 5/8"Ø ANCHOR BOLTS.

TYPICAL FLOOR MOUNTING FOR EQUIPMENT

DETAIL D/VAR

Brown AND Caldwell

WALNUT CREEK, CALIFORNIA

SUBMITTED: _____ DATE: _____
PROJECT MANAGER

APPROVED: _____ DATE: _____
BROWN AND CALDWELL

LINE IS 2 INCHES AT FULL SIZE (IF NOT 2" - SCALE ACCORDINGLY)

SCALE: NO SCALE
DESIGNED: RJM
DRAWN: RJM
CHECKED: --
APPROVED: --

EXTERNAL REFERENCE FILES
142399-TB-redwood city.dwg
142399-MP-01-E0004.dwg

PRELIMINARY

THIS DRAWING IS NOT VALID FOR CONSTRUCTION PURPOSES UNLESS IT BEARS THE SEAL AND SIGNATURE OF A DULY REGISTERED PROFESSIONAL

CHARLES W. JOYCE
ENGINEER-IN-RESPONSIBLE CHARGE
C33166
CALIFORNIA REGISTRATION NUMBER

REVISIONS

ZONE	REV.	DESCRIPTION	BY	DATE	APP.

PUMP STATION 2 PRE-DESIGN

SVCW Silicon Valley Clean Water

ELECTRICAL

PUMP STATION 2

DETAILS 1

FILENAME E-004-052.DWG
BC PROJECT NUMBER 142399
January 13, 2015
DRAWING NUMBER **E-004-052**
SHEET NUMBER 61 OF 67

Path: P:\142000\142399 - SBSA Pump Station Predesign\CADD\2-SHEETS\E-ELECTRICAL Filename: E-004-052.dwg Plot Date: January 13, 2015 - 12:38 PM CADD User: Burke, Fred

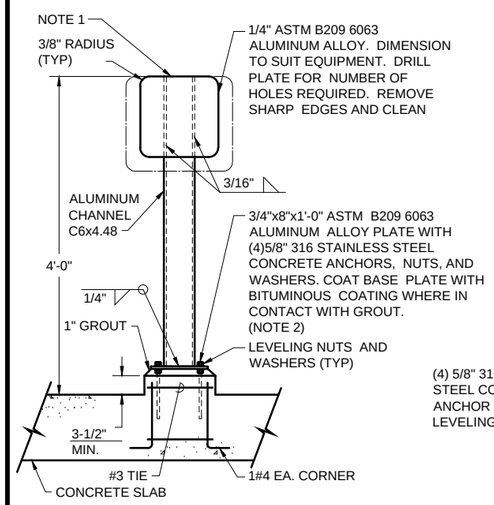

AT NEW CONCRETE SLAB

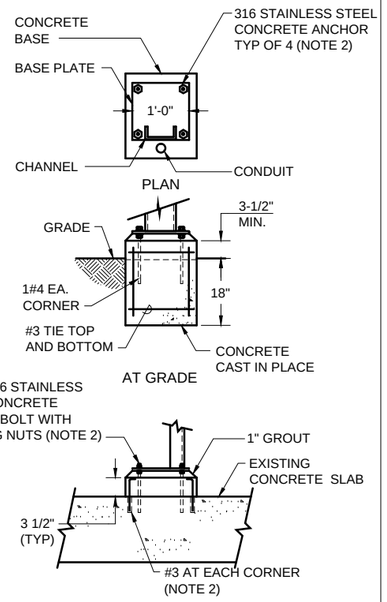

NOTES:

1. STAND PLATE: 2'x2' MAXIMUM.
2. SEE TYPICAL CONCRETE ANCHOR OR THREADED ROD DETAIL FOR ANCHOR REQUIREMENTS.

TYPICAL EQUIPMENT STAND

DETAIL E/VAR

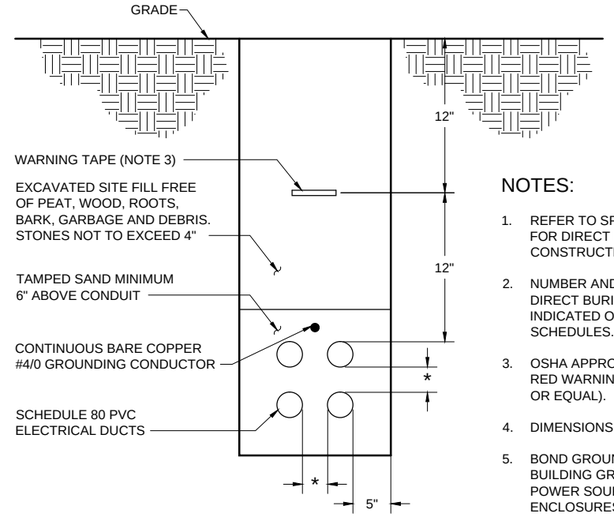

NOTES:

1. REFER TO SPECIFICATION DIVISION 16 FOR DIRECT BURIED RACEWAY CONSTRUCTION REQUIREMENTS.
2. NUMBER AND SIZE OF ELECTRICAL DIRECT BURIED RACEWAYS AS INDICATED ON DRAWINGS OR SCHEDULES.
3. OSHA APPROVED 2" WIDE DETECTABLE RED WARNING TAPE (BRADY IDENTOLINE OR EQUAL).
4. DIMENSIONS ARE MINIMUM.
5. BOND GROUNDING CONDUCTOR TO BUILDING GROUNDING ELECTRODES, POWER SOURCE AND LOAD ENCLOSURES.
6. SADDLE-TYPE CONDUIT SPACERS REQUIRED EVERY 8' (CARLON SNAP-LOC, SNAP-N-STAC, OR EQUAL).

* PROVIDE 2" SEPARATION FOR CONDUITS LESS THAN 4".
* PROVIDE 3" SEPARATION FOR CONDUITS 4" AND LARGER.

DIRECT BURIED DUCT BANK

DETAIL F/VAR

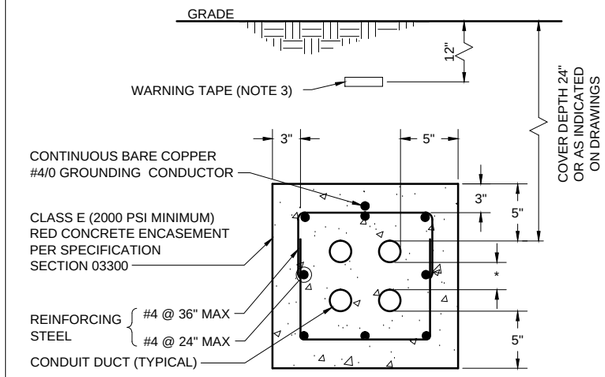

NOTES:

1. REFER TO SPECIFICATION DIVISION 16 FOR DUCTBANK CONSTRUCTION REQUIREMENTS.
2. NUMBER AND SIZE OF ELECTRICAL DUCTS AS INDICATED ON DRAWINGS OR SCHEDULES.
3. OSHA APPROVED 2" WIDE DETECTABLE RED WARNING TAPE (BRADY IDENTOLINE OR EQUAL).
4. DIMENSIONS ARE MINIMUM AND TYPICAL FOR OUTSIDE SURFACES.
5. BOND GROUNDING CONDUCTOR TO ALL GROUNDING ELECTRODES ALONG ITS PATH INCLUDING BUILDING GROUNDING ELECTRODE AT EACH END OF THE DUCTBANK.
6. SADDLE-TYPE CONDUIT SPACERS REQUIRED EVERY 8' (CARLON SNAP-LOC, SNAP-N-STAC, OR EQUAL).

*PROVIDE 2" SEPARATION FOR CONDUITS LESS THAN 4".
*PROVIDE 3" SEPARATION FOR CONDUITS 4" AND LARGER.

REINFORCED CONCRETE ENCASED DUCTBANK

DETAIL G/VAR

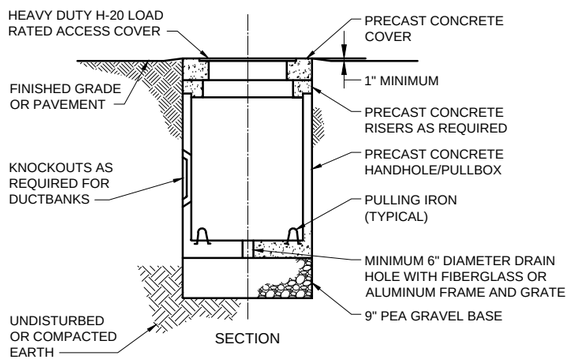

NOTES:

1. HANDHOLE/PULLBOX DEPTH, SIZE AND LOCATION PER DRAWINGS.
2. MINIMUM INTERIOR DIMENSIONS SHALL BE 3' x 3' x 3'D UON.
3. BOND DUCTBANK GROUND CONDUCTORS TOGETHER.
4. MANHOLE INTERIOR SPACE: CLASSIFIED AS CORROSIVE AREA PER SPECIFICATION DIVISION 16.

HANDHOLE/PULLBOX

DETAIL H/VAR

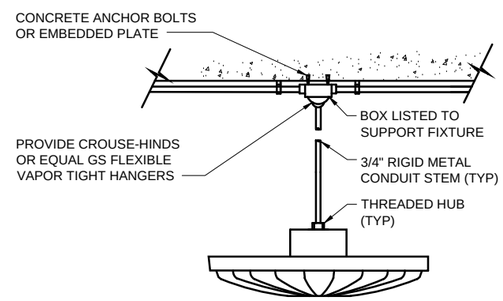

FOR EXPOSED CONDUIT

PENDANT LED FIXTURE MOUNTING

DETAIL J/VAR

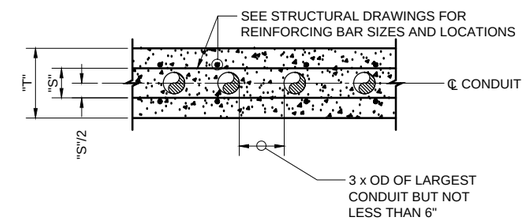

NOTES:

1. OD = OUTSIDE DIAMETER OF CONDUIT.
2. S = CLEAR SPACE BETWEEN REINFORCING.
3. MAXIMUM OD = T/4 OR S - 1/2".
4. PROVIDE CONDUITS PARALLEL TO BEAMS AND WALLS SUPPORTING THE SLAB AT 4 x T FROM THE FACE OF THE BEAMS OR WALLS
5. PROVIDE PVC OR PVC COATED GRS CONDUIT WHERE IN CONTACT WITH REINFORCING.

RACEWAYS IN ELEVATED CONCRETE PAD

DETAIL K/VAR

Brown AND Caldwell

WALNUT CREEK, CALIFORNIA

SUBMITTED: _____ DATE: _____
PROJECT MANAGER

APPROVED: _____ DATE: _____
BROWN AND CALDWELL

LINE IS 2 INCHES AT FULL SIZE (IF NOT 2" - SCALE ACCORDINGLY)

SCALE: NO SCALE
DESIGNED: RJM
DRAWN: RJM
CHECKED: --
APPROVED: --

EXTERNAL REFERENCE FILES
142399-MF-01-E0005.dwg
142399-TB-redwood city.dwg

PRELIMINARY

THIS DRAWING IS NOT VALID FOR CONSTRUCTION PURPOSES UNLESS IT BEARS THE SEAL AND SIGNATURE OF A DULY REGISTERED PROFESSIONAL

CHARLES W. JOYCE
ENGINEER-IN-RESPONSIBLE CHARGE
C33166
CALIFORNIA REGISTRATION NUMBER

REVISIONS

ZONE	REV.	DESCRIPTION	BY	DATE	APP.

PUMP STATION 2 PRE-DESIGN

SVCW Silicon Valley Clean Water

ELECTRICAL

PUMP STATION 2

DETAILS 2

FILENAME E-005-052.DWG
BC PROJECT NUMBER 142399
January 13, 2015
DRAWING NUMBER **E-005-052**
SHEET NUMBER 62 OF 67

Path: P:\142000\142399 - SBSA Pump Station Predesign\CADD\2-SHEETS\E-ELECTRICAL Filename: E-005-052.dwg Plot Date: January 13, 2015 - 12:38 PM CADD User: Burke, Fred

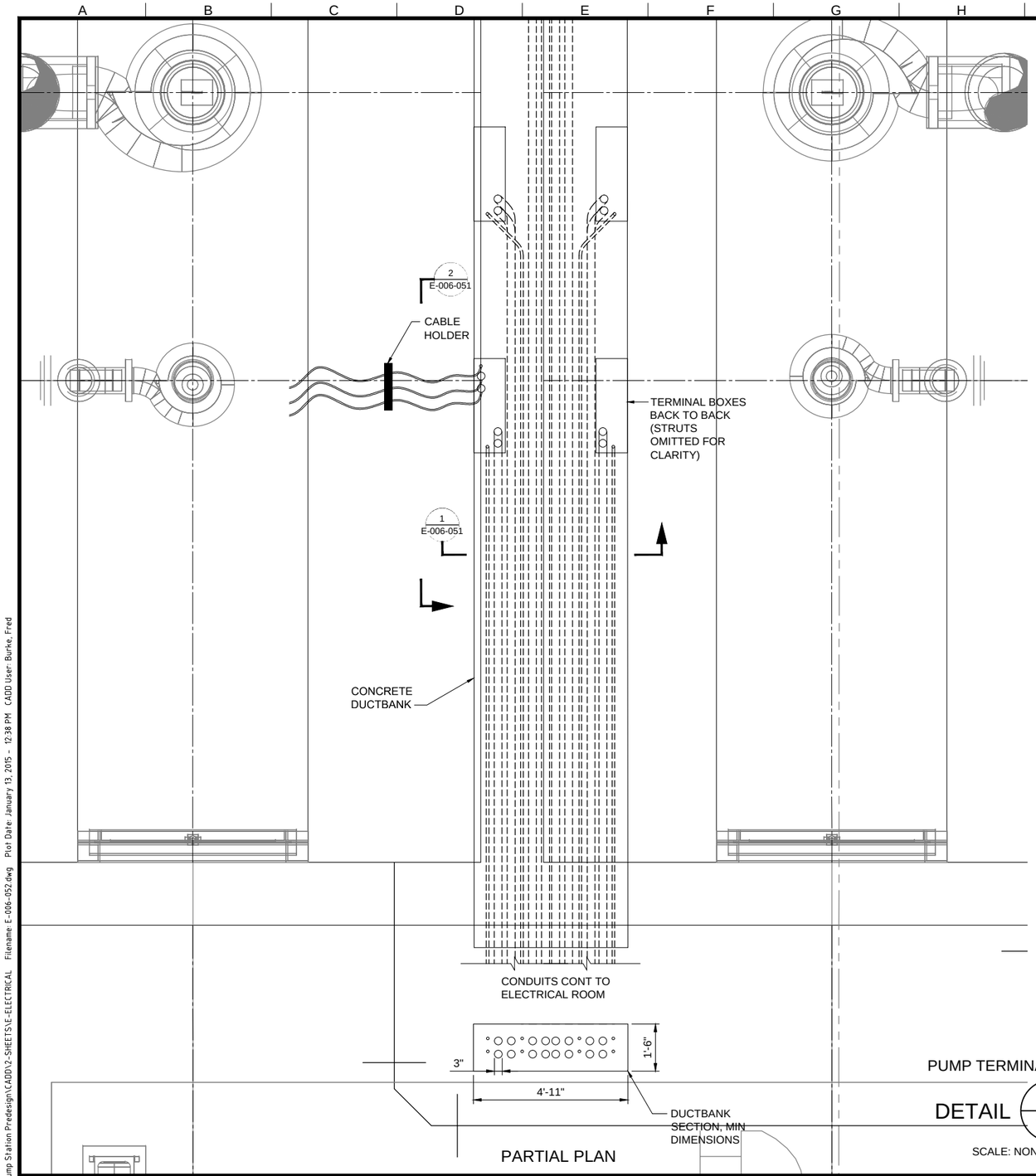

PARTIAL PLAN

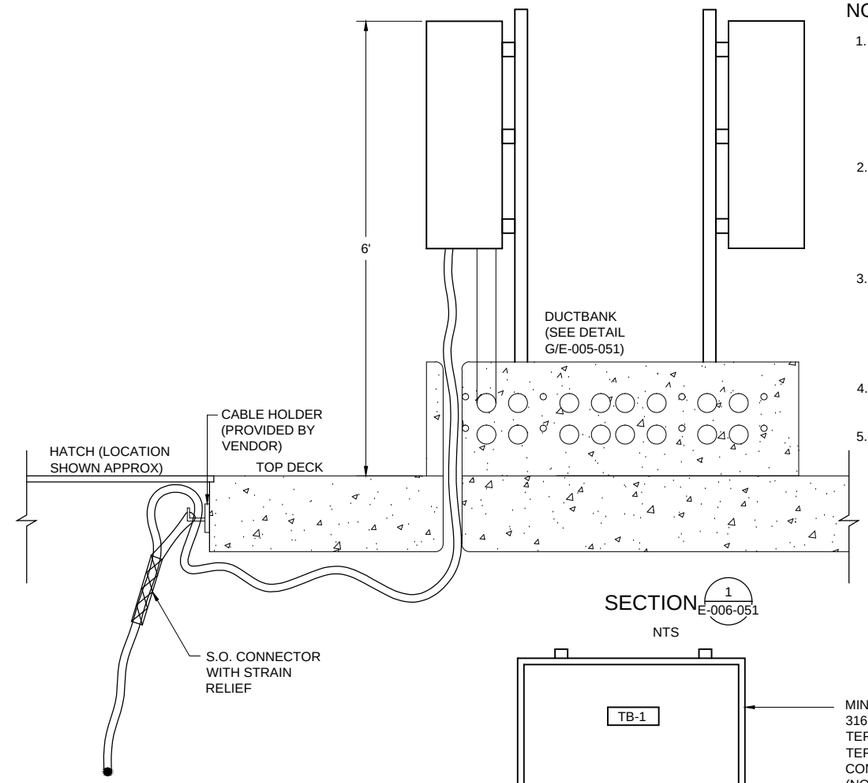

SECTION 1 E-006-051

NTS

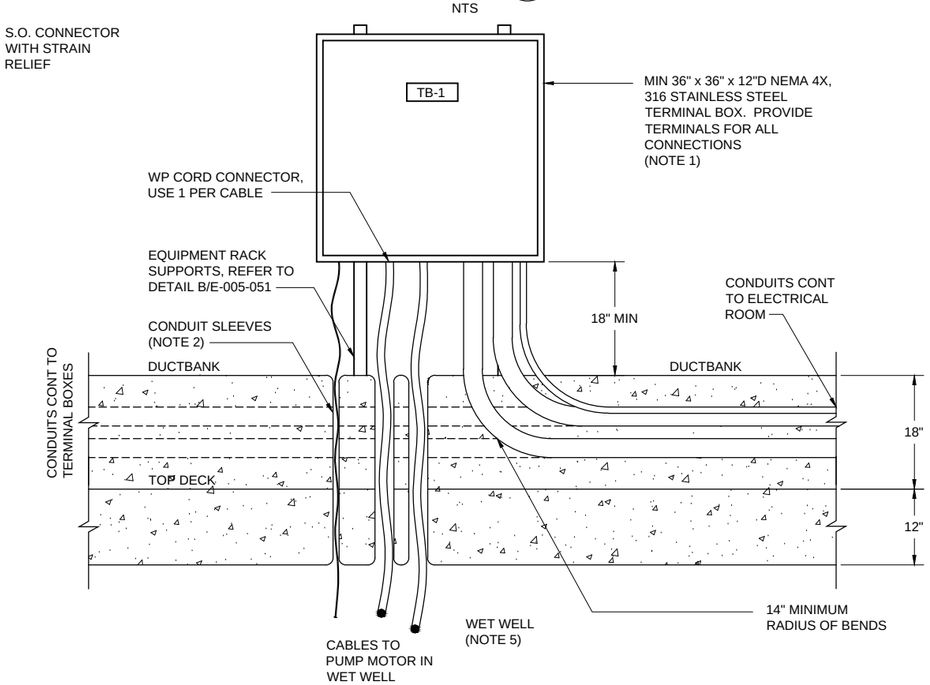

SECTION 2 E-006-051

NTS

NOTES:

1. TERMINAL ENCLOSURE BOX SHALL BE SIZED PER NEC. PROVIDE WITH CONTINUOUS HINGED DOOR WITH CLAMP LATCHES. PAINTED STEEL BACK PANEL. LOCATE ENCLOSURE OUTSIDE OF HAZARDOUS AREA AS DEFINED IN NFPA 820.
2. PVC SCHEDULE 40 SLEEVES THROUGH CONCRETE DECK WITH BELL ADAPTERS TOP AND BOTTOM. SLEEVE DIAMETER FOR THE SENSOR CABLE SHALL BE 2" MIN AND MOTOR CABLES SHALL BE 3"MIN.
3. PUMP HATCH AND PUMP CABLES SHOWN TO THE SIDE FOR CLARITY. ACTUAL PUMP HATCH LOCATION WILL BE BEHIND THE TERMINAL BOX. INSTALL THE CABLE HOLDERS NEAR THE PUMP HATCH FOR ACCESS.
4. INSTALL CONDUITS IN THE CONCRETE SLAB PER DETAIL K/E-005-051.
5. WET WELL IS CLASS 1, DIVISION 1 LOCATION WITHOUT VENTILATION. AREA BECOMES CLASS 1, DIVISION 2 WITH PROPER VENTILATION. INSTALL PER NEC ARTICLE 501.

PUMP TERMINAL BOX

DETAIL M / VAR

SCALE: NONE

Brown AND Caldwell

WALNUT CREEK, CALIFORNIA

SUBMITTED: _____ DATE: _____
PROJECT MANAGER

APPROVED: _____ DATE: _____
BROWN AND CALDWELL

LINE IS 2 INCHES AT FULL SIZE (IF NOT 2" - SCALE ACCORDINGLY)

SCALE: NO SCALE
DESIGNED: RJM
DRAWN: RJM
CHECKED: --
APPROVED: --

EXTERNAL REFERENCE FILES
142399-TB-redwood city.dwg
142399-MF-01-E0006.dwg
142399-MF-03-San Carlos-Mechanical.dwg
142399-MF-03SC-S-NPS-LVL2.dwg
142399-MF-03-San Carlos-Parcel.dwg
142399-MF-03-San Carlos-Structure footprints.dwg
PS-2 Road.dwg

PRELIMINARY

THIS DRAWING IS NOT VALID FOR CONSTRUCTION PURPOSES UNLESS IT BEARS THE SEAL AND SIGNATURE OF A DULY REGISTERED PROFESSIONAL

CHARLES W. JOYCE
ENGINEER-IN-RESPONSIBLE CHARGE
C33166
CALIFORNIA REGISTRATION NUMBER

REVISIONS

ZONE	REV.	DESCRIPTION	BY	DATE	APP.

PUMP STATION 2 PRE-DESIGN

SVCW Silicon Valley Clean Water

ELECTRICAL

PUMP STATION 2

DETAILS 3

FILENAME E-006-052.DWG
BC PROJECT NUMBER 142399
January 13, 2015
DRAWING NUMBER **E-006-052**
SHEET NUMBER 63 OF 67

Path: P:\142000\142399 - SBSA Pump Station Predesign\CADD\2-SHEETS\E-ELECTRICAL Filename: E-006-052.dwg Plot Date: January 13, 2015 - 12:38 PM CADD User: Burke, Fred

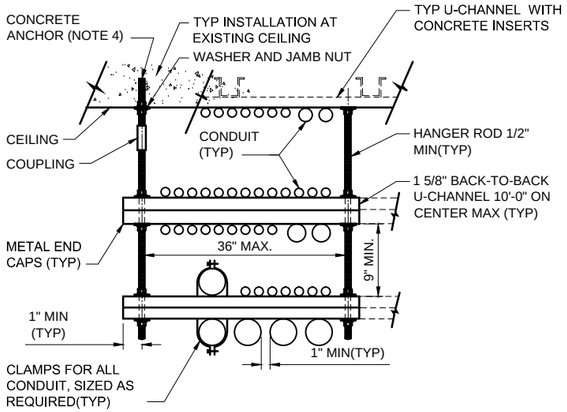

FRONT VIEW

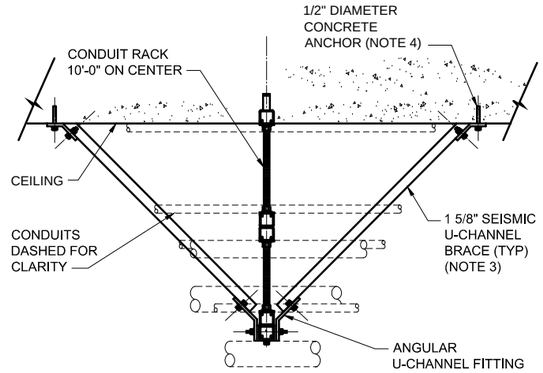

SIDE VIEW

NOTES:

1. MATERIALS AND HARDWARE PER SPECIFICATION DIVISION 16 REQUIREMENTS.
2. HOLE SIZES ON FITTINGS SHALL BE 9/16" DIAMETER WITH 1/2" HEX HEAD CAP SCREW 15/16" LONG AND 1/2" CLAMP NUT WITH SPRING.
3. SEE STRUCTURAL SPECIFICATION FOR SEISMIC ANCHORAGE AND BRACING REQUIREMENTS. SEISMIC CHANNEL BRACING REQUIRED AT INTERVALS OF 40' MAX.
4. SEE TYPICAL CONCRETE ANCHOR OR THREADED ROD DETAIL FOR ANCHOR REQUIREMENTS.
5. MAX UNIFORMLY DISTRIBUTED LOAD (CONDUIT AND FILL) PER UNIT TO BE 1000 LBS.

SUSPENDED CONDUIT RACK

DETAIL N/VAR

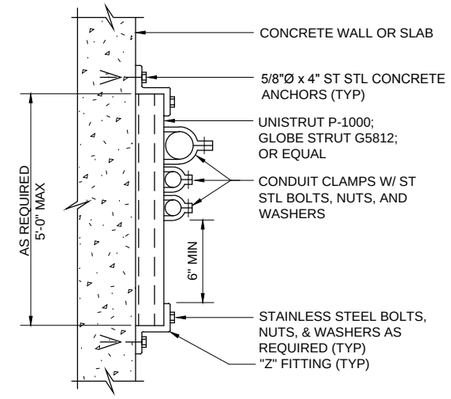

ELEVATION

NOTES:

1. THIS DETAIL TYPICAL FOR BOTH VERTICAL AND HORIZONTAL MOUNTING - FOR HORIZONTAL MOUNTING, PLACE 1"± NON-SHRINK GROUT UNDER THE SUPPORT.
2. PREFORMED CHANNEL, FITTINGS AND CLAMPS SHALL BE HOT-DIP GALVANIZED STEEL. FIELD COAT ALL CUTS.
3. CHANNELS TO BE SPACED AT 5'-0" OC MAXIMUM.

WALL CONDUIT MOUNTING

DETAIL P/VAR

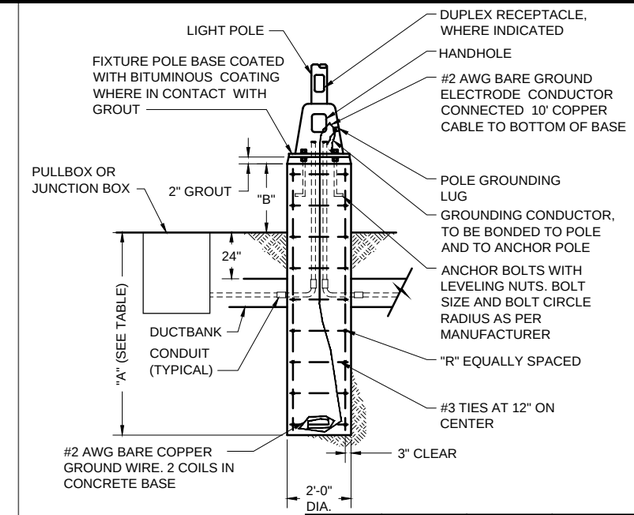

NOTE:

1. FOUNDATION SHALL BEAR AGAINST ORIGINAL SOIL OR 90% COMPACTED BACKFILL OF APPROVED TYPE

POLE HEIGHT	"A" MINIMUM	MAX BASE HEIGHT "B"	"R" LONGITUDINAL REINF.
10'-0"	4'-6"	3'-0"	(4) #4
20'-0"	5'-8"	3'-0"	(4) #5
30'-0"	7'-0"	3'-0"	(6) #5
40'-0"	7'-10"	3'-0"	(6) #6

POLE BASE (EXTENDED)

DETAIL Q/VAR

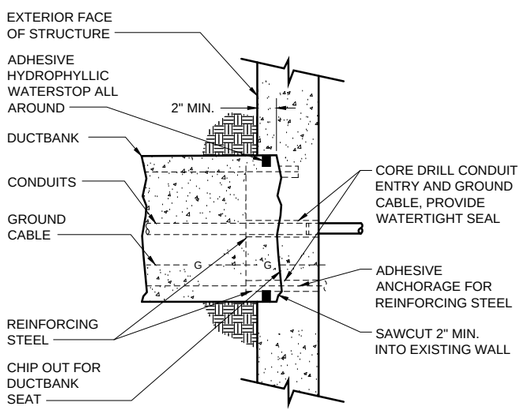

DUCTBANK AT EXISTING STRUCTURE

DETAIL R/VAR

Brown AND Caldwell

WALNUT CREEK, CALIFORNIA

SUBMITTED: _____ DATE: _____
PROJECT MANAGER

APPROVED: _____ DATE: _____
BROWN AND CALDWELL

LINE IS 2 INCHES AT FULL SIZE (IF NOT 2" - SCALE ACCORDINGLY)

SCALE: NO SCALE
DESIGNED: RJM
DRAWN: RJM
CHECKED: --
APPROVED: --

EXTERNAL REFERENCE FILES
142399-MF-01-E0007.dwg
142399-TB-redwood city.dwg

PRELIMINARY

THIS DRAWING IS NOT VALID FOR CONSTRUCTION PURPOSES UNLESS IT BEARS THE SEAL AND SIGNATURE OF A DULY REGISTERED PROFESSIONAL

CHARLES W. JOYCE
ENGINEER-IN-RESPONSIBLE CHARGE
C33166
CALIFORNIA REGISTRATION NUMBER

REVISIONS

ZONE	REV.	DESCRIPTION	BY	DATE	APP.

PUMP STATION 2 PRE-DESIGN

SVCW Silicon Valley Clean Water

ELECTRICAL

PUMP STATION 2

DETAILS 4

FILENAME E-007-052.DWG
BC PROJECT NUMBER 142399
January 13, 2015
DRAWING NUMBER **E-007-052**
SHEET NUMBER 64 OF 67

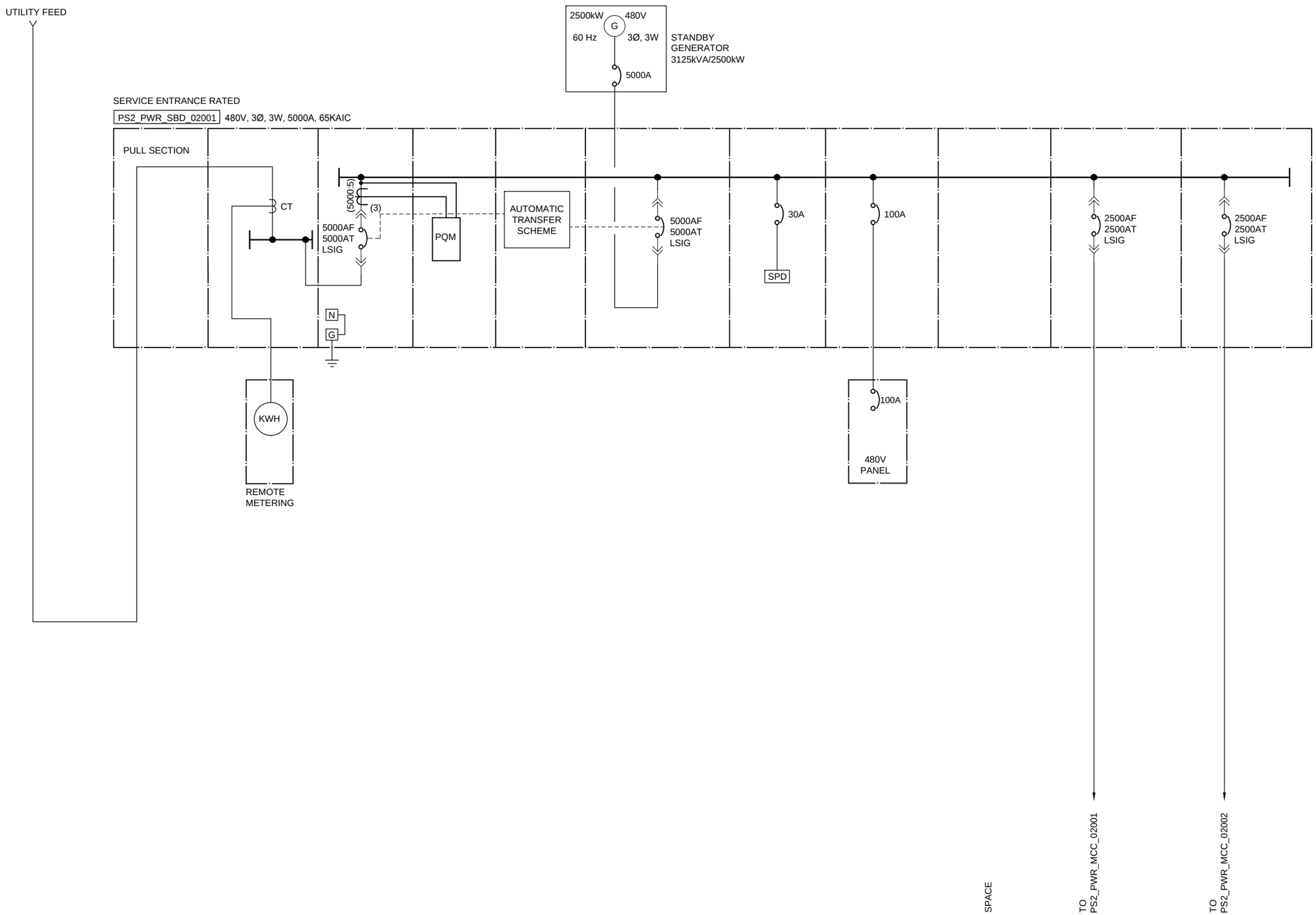

ONE LINE DIAGRAM

Brown AND Caldwell

WALNUT CREEK, CALIFORNIA

SUBMITTED: _____ DATE: _____
PROJECT MANAGER

APPROVED: _____ DATE: _____
BROWN AND CALDWELL

LINE IS 2 INCHES AT FULL SIZE (IF NOT 2" - SCALE ACCORDINGLY)

SCALE: NO SCALE
DESIGNED: RJM
DRAWN: RJM
CHECKED: --
APPROVED: --

EXTERNAL REFERENCE FILES
142399-TB-redwood city.dwg

PRELIMINARY

THIS DRAWING IS NOT VALID FOR CONSTRUCTION PURPOSES UNLESS IT BEARS THE SEAL AND SIGNATURE OF A DULY REGISTERED PROFESSIONAL

CHARLES W. JOYCE
ENGINEER-IN-RESPONSIBLE CHARGE
C33166
CALIFORNIA REGISTRATION NUMBER

REVISIONS

ZONE	REV.	DESCRIPTION	BY	DATE	APP.

PUMP STATION 2 PRE-DESIGN

SVCW Silicon Valley Clean Water

ELECTRICAL

PUMP STATION 2

PS2_PWR_MCC_02001
ONE LINE DIAGRAM

FILENAME
E-008-052.DWG

BC PROJECT NUMBER
142399

January 13, 2015

DRAWING NUMBER
E-601-052

SHEET NUMBER
65 OF 67

Path: P:\142000\142399 - SBSA Pump Station Predesign\CADD\2-SHEETS\E-ELECTRICAL Filename: E-008-052.dwg Plot Date: January 13, 2015 - 12:39 PM CADD User: Burke, Fred

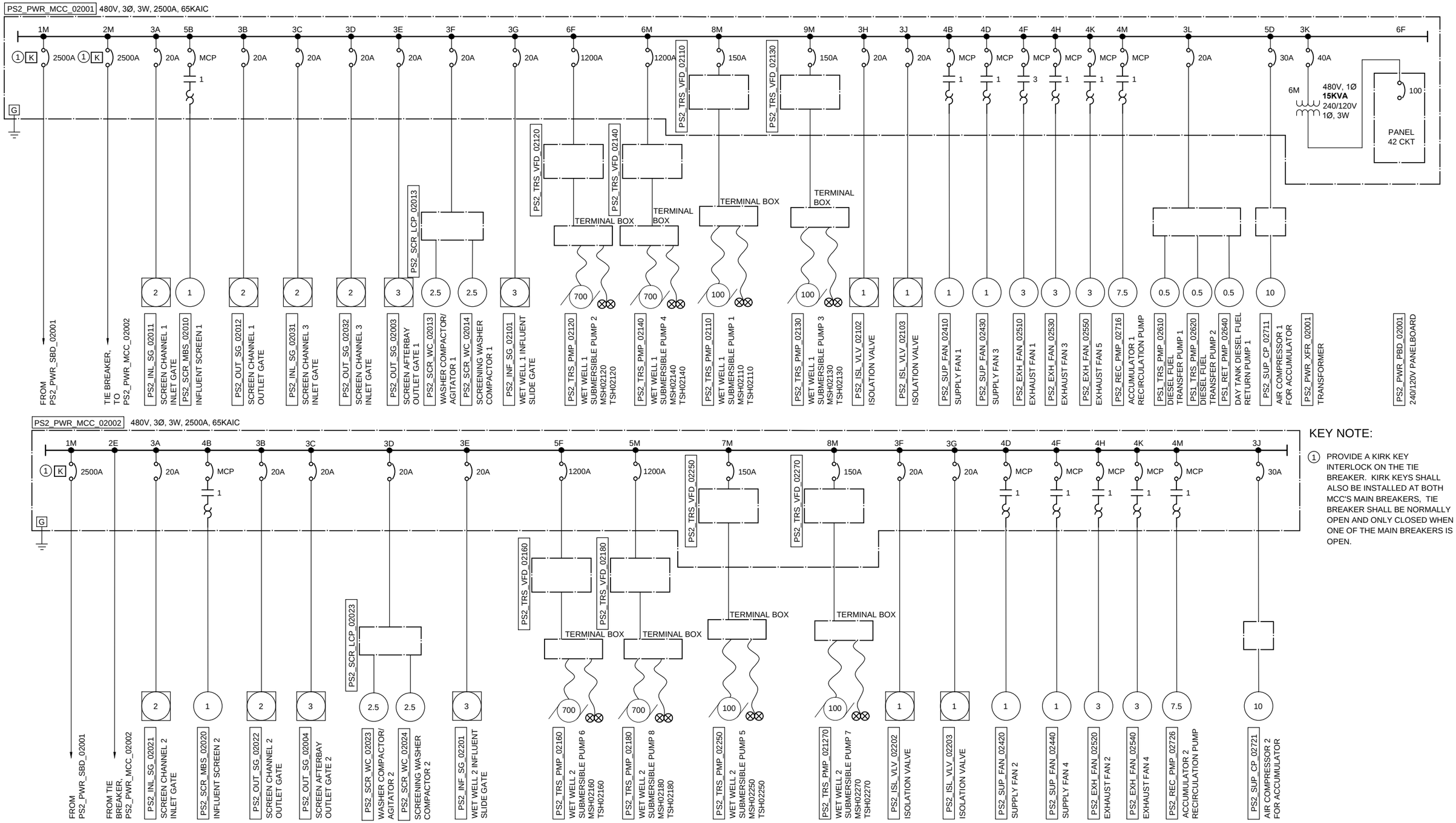

KEY NOTE:

1. PROVIDE A KIRK KEY INTERLOCK ON THE TIE BREAKER. KIRK KEYS SHALL ALSO BE INSTALLED AT BOTH MCC'S MAIN BREAKERS, TIE BREAKER SHALL BE NORMALLY OPEN AND ONLY CLOSED WHEN ONE OF THE MAIN BREAKERS IS OPEN.

ONE LINE DIAGRAMS

Brown AND Caldwell
WALNUT CREEK, CALIFORNIA

SUBMITTED: _____ DATE: _____
PROJECT MANAGER
APPROVED: _____ DATE: _____
BROWN AND CALDWELL

LINE IS 2 INCHES AT FULL SIZE (IF NOT 2" - SCALE ACCORDINGLY)
SCALE: NO SCALE
DESIGNED: RJM
DRAWN: RJM
CHECKED: --
APPROVED: --

EXTERNAL REFERENCE FILES
142399-TB-redwood city.dwg

PRELIMINARY

THIS DRAWING IS NOT VALID FOR CONSTRUCTION PURPOSES UNLESS IT BEARS THE SEAL AND SIGNATURE OF A DULY REGISTERED PROFESSIONAL

CHARLES W. JOYCE
ENGINEER-IN-RESPONSIBLE CHARGE
C33166
CALIFORNIA REGISTRATION NUMBER

REVISIONS

ZONE	REV.	DESCRIPTION	BY	DATE	APP.

PUMP STATION 2 PRE-DESIGN

SVCW Silicon Valley Clean Water

ELECTRICAL
PUMP STATION 2

PS2_PWR_MCC_02001 AND
PS2_PWR_MCC_02002 ONE LINE DIAGRAMS

FILENAME E-009-052.DWG
BC PROJECT NUMBER 142399
January 13, 2015
DRAWING NUMBER **E-602-052**
SHEET NUMBER 66 OF 67

Path: P:\142000\142399 - SBSA Pump Station Predesign\CADD\2-SHEETS\E-ELECTRICAL Filename: E-009-052.dwg Plot Date: January 13, 2015 - 12:39 PM CADD User: Burke, Fred

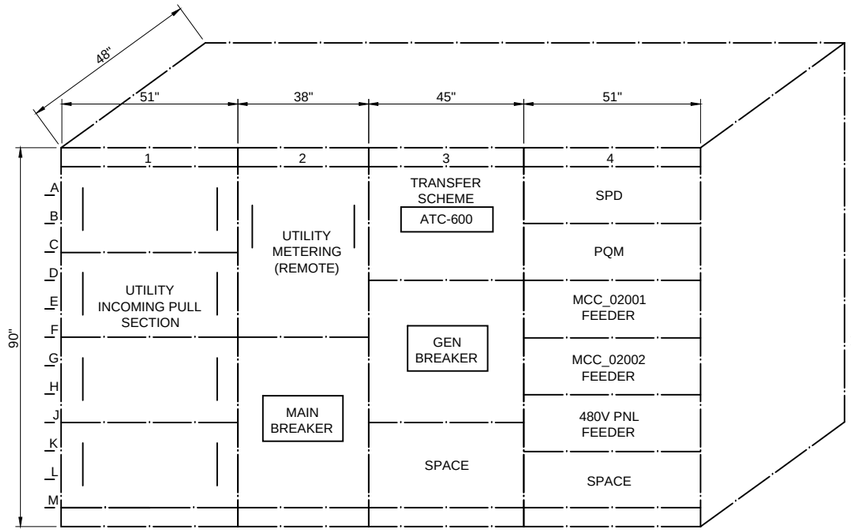

PS2_PWR_SBD_02001 ELEVATION
NTS

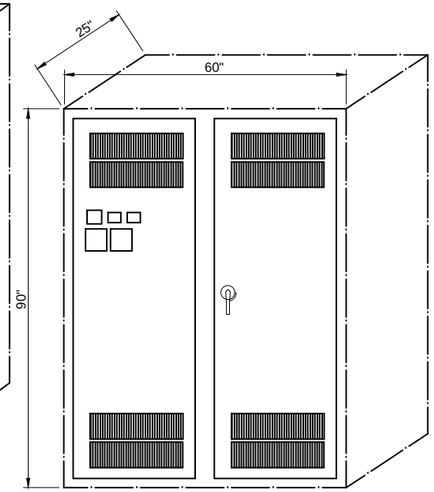

PS2_TRS_VFD_02120
ELEVATION
NTS

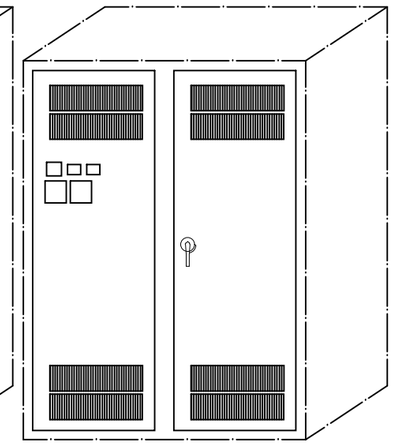

PS2_TRS_VFD_02140
ELEVATION
NTS

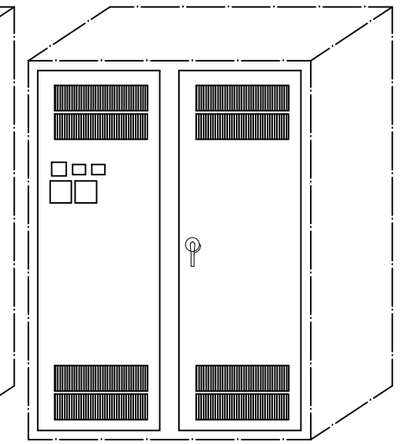

PS2_TRS_VFD_02260
ELEVATION
NTS

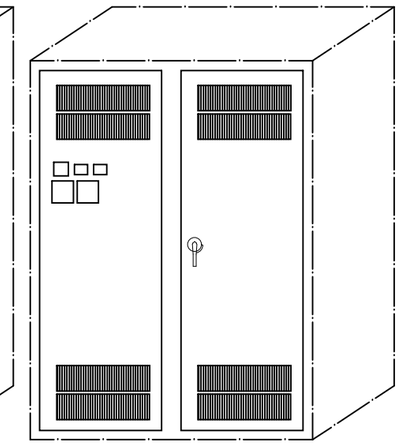

PS2_TRS_VFD_02280
ELEVATION
NTS

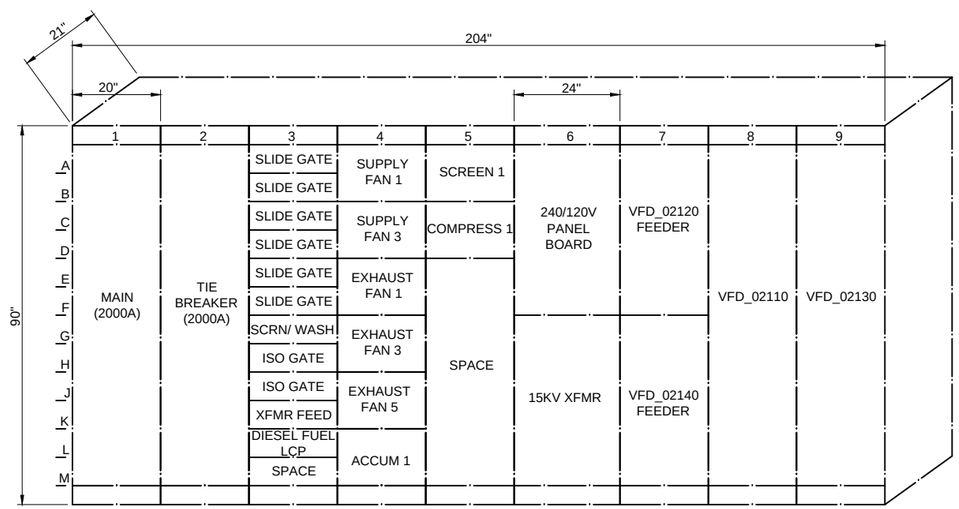

PS2_PWR_MCC_02001 ELEVATION
NTS

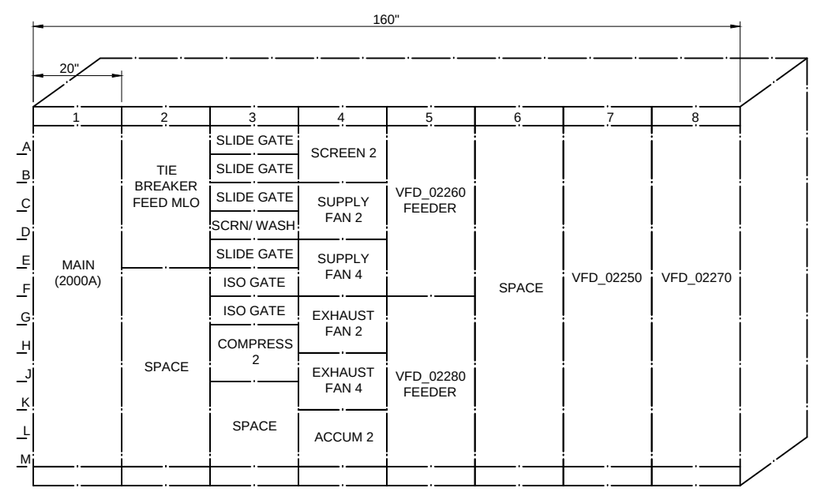

PS2_PWR_MCC_02002 ELEVATION
NTS

Path: P:\142000\142399 - SBSA Pump Station Predesign\CADD\2-SHEETS\E-ELECTRICAL Filename: E-010-052.dwg Plot Date: January 13, 2015 - 12:39 PM CADD User: Burke, Fred

Brown AND Caldwell
WALNUT CREEK, CALIFORNIA

SUBMITTED: _____ DATE: _____
PROJECT MANAGER
APPROVED: _____ DATE: _____
BROWN AND CALDWELL

LINE IS 2 INCHES AT FULL SIZE (IF NOT 2" - SCALE ACCORDINGLY)
SCALE: AS SHOWN
DESIGNED: RJM
DRAWN: RJM
CHECKED: --
APPROVED: --

EXTERNAL REFERENCE FILES
142399-TB-redwood city.dwg

PRELIMINARY

THIS DRAWING IS NOT VALID FOR CONSTRUCTION PURPOSES UNLESS IT BEARS THE SEAL AND SIGNATURE OF A DULY REGISTERED PROFESSIONAL

CHARLES W. JOYCE
ENGINEER-IN-RESPONSIBLE CHARGE
C33166
CALIFORNIA REGISTRATION NUMBER

REVISIONS

ZONE	REV.	DESCRIPTION	BY	DATE	APP.

PUMP STATION 2 PRE-DESIGN

SVCW Silicon Valley Clean Water

ELECTRICAL
PUMP STATION 2

SWITCHBOARD, MCC AND VFD ELEVATIONS

FILENAME E-010-052.DWG
BC PROJECT NUMBER 142399
January 13, 2015
DRAWING NUMBER **E-603-052**
SHEET NUMBER 67 OF 67

Appendix G: RCPS Detailed Cost Estimate

Brown and Caldwell, April 6, 2016

This page intentionally left blank.

SILICON VALLEY CLEAN WATER
REDWOOD CITY PUMP STATION
CONCEPTUAL LEVEL CLASS 3 ESTIMATE

Engineer	BROWN AND CALDWELL
Estimator	Ian Kruljac
BC Project Manager	CHARLIE JOYCE
BC Office	WALNUT CREEK
Estimate Issue No.	3
QA/QC Reviewer	DESIGN TEAM
QA/QC Review Date	4/6/2016

Project Number: 142399
Estimate Issue: 3
Due Date: 5/5/2016
Estimator: Ian Kruljac

REDWOOD CITY PUMP STATION

Phase	Estimate Breakdown	Quantity	Labor Cost/Unit	Material Cost/Unit	Sub Cost/Unit	Equip Cost/Unit	Other Cost/Unit	Total Cost/Unit	Total Net Amount
01 REDWOOD CITY PS SITE WORK									
01107	Surveying	1.0 LSUM	24,048.11	649.69		637.32		25,335.12 /LSUM	25,335
02220	Existing Pumps Station Demolition - 2014 EST.	302.9 CCF	408.66	44.32		291.82		744.80 /CCF	225,630
02221	Site Demolition	1.0 LSUM	5,667.09			2,742.27		8,409.36 /LSUM	8,409
02221	Site Demolition - Asphalt -	20,000.0 SQFT	1.15	0.11		0.61		1.87 /SQFT	37,365
02999	Bypass Pumping	30.0 DAYS			37,906.60			37,906.60 /DAYS	1,137,198
02999	Pump Station Equipment Demolition	1.0 LS	311,844.64			9,209.80		321,054.44 /LS	321,054
22201	Yard Piping - Foul Air Pipe	400.0 LFT	337.73	137.29				475.02 /LFT	190,008
22999	Tie Ins Work Allowance	1.0 LS			132,477.50			132,477.50 /LS	132,478
31240	Dewatering - 4- 4" sumps 120 Day duration	120.0 Days	427.09	14.82		168.36		610.27 /Days	73,232
32740	Asphaltic Paving	20,000.0 SQFT	0.78	4.29		0.48		5.56 /SQFT	111,137
32999	Lanscaping and Fencing Improvments - Allowance	1.0 LS			419,953.66			419,953.66 /LS	419,954
33500	36" Forcemain Trench	130.0 LFT	56.79	28.73	1.60	9.35		96.47 /LFT	12,541
33500	60" Sanitary Sewer	100.0 LFT	277.42	153.46	2.08	26.75		459.70 /LFT	45,970
33500	66" Sanitary Sewer	75.0 LFT	317.45	173.67	2.77	29.49		523.38 /LFT	39,254
33500	24" Foul Air Trench	400.0 LFT	95.86	53.37	0.52	12.67		162.42 /LFT	64,968
33530	Yard Piping - Sanitary Sewer	183.0 LFT	119.41	239.43		34.46		393.30 /LFT	71,974
40120	Yard Piping - 36" Forcemain	130.0 LFT	476.73	1,384.21				1,860.94 /LFT	241,922
	01 REDWOOD CITY PS SITE WORK	1.0 LSUM	871,484.78	436,045.45	1,690,459.97	160,439.05		3,158,429.25 /LSUM	3,158,429

Project Number: 142399
Estimate Issue: 3
Due Date: 5/5/2016
Estimator: Ian Kruljac

REDWOOD CITY PUMP STATION

Phase	Estimate Breakdown	Quantity	Labor Cost/Unit	Material Cost/Unit	Sub Cost/Unit	Equip Cost/Unit	Other Cost/Unit	Total Cost/Unit	Total Net Amount
02 REDWOOD CITY WET WELL									
03330	Slabs Wet Well Base Slab - 36" thick	170.0 CYD	74.20	183.89		5.88		263.97 /CYD	44,875
03330	Valve Vault Base Slabs - 18" thick	120.0 CYD	111.97	204.04		7.55		323.56 /CYD	38,827
03345	Concrete Walls - Wet Well 24" Thick	513.0 CYD	494.57	242.38		9.64		746.59 /CYD	383,000
03345	Concrete Walls - Valve Box - 18" thick	107.0 CYD	666.02	289.63		10.05		965.70 /CYD	103,330
03345	Concrete Walls - Channel inlet - Mid wall	71.0 CYD	772.05	296.09		10.35		1,078.50 /CYD	76,574
03345	Concrete Fillets - Wet Well	254.0 CYD	219.84	178.93		9.03		407.80 /CYD	103,582
03345	Concrete - OG Ramps - Wet Well	50.0 CYD	73.89	177.61		9.18		260.68 /CYD	13,034
03350	Elevated Slab - Wet Well and Valve Vault	205.0 CYD	482.06	340.90		12.65		835.61 /CYD	171,299
05999	Access Hatches	16.0 EACH	328.11	1,732.53				2,060.64 /EACH	32,970
11999	Pumps Station - Pumps and Instr..	8.0 Each	40,569.51	259,673.04		2,318.36		302,560.91 /Each	2,420,487
31250	Shoring Systems - Sheet Pile	8,400.0 SQFT	21.20	16.44		9.15		46.78 /SQFT	392,956
31315	Excavation and Backfill	9,278.0 CYD	12.23	9.71		11.64		33.58 /CYD	311,542
40120	Piping, Flanges, Supports and Valves - Coated	330.0 LFT	482.13	3,881.76				4,363.90 /LFT	1,440,085
46999	Slide Gates	6.0 Each	5,692.57	50,532.13		1,240.84		57,465.53 /Each	344,793
	02 REDWOOD CITY WET WELL	1.0 LSUM	1,378,832.32	4,273,705.92		224,815.71		5,877,353.95 /LSUM	5,877,354

Project Number: 142399
Estimate Issue: 3
Due Date: 5/5/2016
Estimator: Ian Kruljac

REDWOOD CITY PUMP STATION

Phase	Estimate Breakdown	Quantity	Labor Cost/Unit	Material Cost/Unit	Sub Cost/Unit	Equip Cost/Unit	Other Cost/Unit	Total Cost/Unit	Total Net Amount
03 REDWOOD SCREENING BUILDING									
03330	Slabs Screening building Base Slab - 36" thick	149.0 CYD	62.45	193.59		6.69		262.73 /CYD	39,147
03340	Concrete Beams - 12 X 24 (5)	13.0 CYD	1,875.55	562.08		33.42		2,471.05 /CYD	32,124
03345	Concrete Walls - Exterior 18" Thick	193.0 CYD	631.86	269.34		9.89		911.09 /CYD	175,840
03345	Concrete Walls - Interior Channels and walls	106.0 CYD	522.60	258.36		9.83		790.79 /CYD	83,824
03350	Elevated Slabs - Ground Floor 18" Thick	74.0 CYD	297.22	229.02		13.41		539.65 /CYD	39,934
03350	Elevated Slabs - Elavation 95 18" Thick	57.0 CYD	306.09	241.70		13.34		561.13 /CYD	31,984
03350	Elevated Slabs - Elavation 123 - 8" Thick	30.6 CYD	594.33	316.42		15.81		926.56 /CYD	28,397
04220	Exterior Masonry Walls - CMU 8" Thick With Pilasters	2,574.0 SQFT	23.77	12.82		0.32		36.91 /SQFT	95,004
05517	Metal Stairs	40.0 RSR	121.04	620.82		6.57		748.43 /RSR	29,937
05999	Hand Railing	210.0 LFT	33.93	64.54		1.23		99.71 /LFT	20,939
07500	Roofing - Membrane	1,140.0 SQFT	8.06	17.03		0.67		25.75 /SQFT	29,352
08100	Screening Building - Doors	1.0 LSUM	2,297.69	5,836.88				8,134.57 /LSUM	8,135
14999	Overhead Bridge Crane	1.0 Each	18,489.05	125,412.09		960.09		144,861.23 /Each	144,861
23999	Foul Air Fans and Damper	1.0 Each	3,274.91	18,292.64				21,567.55 /Each	21,568
23999	FRP Foul Air Ducting	305.0 LFT	458.83	227.74				686.58 /LFT	209,406
23999	HVAC Allowance	3,840.0 SQFT			26.50			26.50 /SQFT	101,743
26999	EI&C Allowance - Building Electrical and Lighting	1.0 LS			132,477.48			132,477.48 /LS	132,477
31250	Shoring Systems - Sheet Pile	5,400.0 SQFT	21.20	16.50		9.15		46.85 /SQFT	252,971
31315	Excavation and Backfill	2,550.0 CYD	12.25	9.61		11.75		33.60 /CYD	85,689
46076	Bar Screens, Compactors and Climbers and Sprayers	2.0 Each	24,788.60	381,288.84		3,311.94		409,389.37 /Each	818,779
46999	Channel Inlet and Outlet Gates	6.0 Each	12,386.03	57,751.00		2,699.86		72,836.89 /Each	437,021
	03 REDWOOD SCREENING BUILDING	1.0 LSUM	784,641.55	1,688,434.63	234,220.20	111,834.59		2,819,130.97 /LSUM	2,819,131

Project Number: 142399
Estimate Issue: 3
Due Date: 5/5/2016
Estimator: Ian Kruljac

REDWOOD CITY PUMP STATION

Phase	Estimate Breakdown	Quantity		Labor Cost/Unit	Material Cost/Unit	Sub Cost/Unit	Equip Cost/Unit	Other Cost/Unit	Total Cost/Unit		Total Net Amount
04 REDWOOD SURGE CONTROL											
03330 Slabs Surge Controll Base Slab - SOG		70.0	CYD	89.66	199.59		11.16		300.41	/CYD	21,029
40120 Surge Tanks Above Ground Piping Supports and Valves		159.0	LFT	350.64	2,407.72				2,758.36	/LFT	438,579
46999 Surge Tanks and Pumps		2.0	EACH	7,072.11	124,188.90				131,261.01	/EACH	262,522
	04 REDWOOD SURGE CONTROL	1.0	LSUM	76,172.00	645,176.60		781.23		722,129.83	/LSUM	722,130

Project Number: 142399
Estimate Issue: 3
Due Date: 5/5/2016
Estimator: Ian Kruljac

REDWOOD CITY PUMP STATION

Phase	Estimate Breakdown	Quantity		Labor Cost/Unit	Material Cost/Unit	Sub Cost/Unit	Equip Cost/Unit	Other Cost/Unit	Total Cost/Unit		Total Net Amount
05 REDWOOD MPPS CONNECTION											
02228 Selective Demolition - Flow Meter and Vault										/sf	3,353
31250 Shoring Systems - Sheet Pile		4,800.0	SQFT	24.17	11.48		10.43		46.08	/SQFT	221,177
31315 Excavation and Backfill		333.0	CYD	19.00	34.23		33.31		86.54	/CYD	28,819
33999 MPPS Tie in Allowance		1.0	LS	10,310.80	14,437.75		3,311.94		28,060.49	/LS	28,060
	05 REDWOOD MPPS CONNECTION	1.0	LSUM	135,023.29	80,932.22		65,453.67		281,409.18	/LSUM	281,409

Project Number: 142399
Estimate Issue: 3
Due Date: 5/5/2016
Estimator: Ian Kruljac

REDWOOD CITY PUMP STATION

Phase	Estimate Breakdown	Quantity	Labor Cost/Unit	Material Cost/Unit	Sub Cost/Unit	Equip Cost/Unit	Other Cost/Unit	Total Cost/Unit	Total Net Amount
06 REDWOOD ODOR/CHEM SYSTEM CONTROL ALLOWANCE									
44411 ODOR CONTROL AND CHEM SYSTEM		1.0 LSUM	1,209,801.97	433,132.50		108,631.54		1,751,566.01 /LSUM	1,751,566
	06 REDWOOD ODOR/CHEM SYSTEM CONTROL ALLOWANCE	1.0 LSUM	1,209,801.97	433,132.50		108,631.54		1,751,566.01 /LSUM	1,751,566

Project Number: 142399
Estimate Issue: 3
Due Date: 5/5/2016
Estimator: Ian Kruljac

REDWOOD CITY PUMP STATION

Phase	Estimate Breakdown	Quantity	Labor Cost/Unit	Material Cost/Unit	Sub Cost/Unit	Equip Cost/Unit	Other Cost/Unit	Total Cost/Unit	Total Net Amount
07 REDWOOD ELECTRICAL AND INSTRUMENTATION									
26999 EI&C Allowance		1.0 LSUM			4,967,906.16			4,967,906.16 /LSUM	4,967,906
	07 REDWOOD ELECTRICAL AND INSTRUMENTATION	1.0 LSUM			4,967,906.16			4,967,906.16 /LSUM	4,967,906
	01 SVCW REDWOOD CITY PUMP STATION								19,577,925

Estimate Totals

Description	Rate	Hours	Amount	Totals
Labor		25,949 hrs	4,455,956	
Material			7,557,427	
Subcontract			6,892,586	
Equipment		9,041 hrs	671,956	
Gross Markups			**19,577,925**	**19,577,925**
Total				**19,577,925**

SILICON VALLEY CLEAN WATER
REDWOOD CITY PUMP STATION
CONCEPTUAL LEVEL CLASS 3 ESTIMATE

Engineer	BROWN AND CALDWELL
Estimator	Ian Kruljac
BC Project Manager	CHARLIE JOYCE
BC Office	WALNUT CREEK
Estimate Issue No.	3
QA/QC Reviewer	DESIGN TEAM
QA/QC Review Date	4/6/2016

REDWOOD CITY PUMP STATION

Phase	Estimate Breakdown	Quantity	Labor Cost/Unit	Material Cost/Unit	Sub Cost/Unit	Equip Cost/Unit	Other Cost/Unit	Total Cost/Unit	Total Net Amount
01 REDWOOD CITY PS SITE WORK									
01107 Surveying									
02-21-13.09	Topographical survey, conventional, minimum	2.0 acre	590.77	20.00	-	16.94	-	627.71 /acre	1,255
02-21-13.09	Surveying, lot location and lines, average	2.0 acre	1,559.64	55.00	-	44.72	-	1,659.35 /acre	3,319
02-21-13.09	Surveying, monuments, 3' long	4.0 ea	194.96	40.00	-	5.59	-	240.55 /ea	962
02-21-13.09	Surveying, crew for building layout, 3 person crew	5.0 day	1,949.54	-	-	55.90	-	2,005.44 /day	10,027
02-21-13.09	Surveying, crew for building layout, 4 person crew	1.0 day	2,664.06	-	-	55.90	-	2,719.96 /day	2,720
01-71-23.19	Surveyor stakes, hardwood, 2" x 2" x 24" long	1.0 c	-	140.00	-	-	-	140.00 /c	140
	Surveying	**1.0 LSUM**	**17,492.41**	**450.00**		**481.05**		**18,423.46 /LSUM**	**18,423**
02220 Existing Pumps Station Demolition - 2014 EST.									
02-41-16.13	Building demolition, large urban projects, concrete, includes 20 mile haul, excludes foundation demolition, dump fees	302,940.0 cf	0.30	-	-	0.22	-	0.52 /cf	156,782
02-41-19.23	Rubbish handling, dumpster, 40 C.Y., 13 ton capacity, weekly rental, includes one dump per week, cost to be added to demolition cost.	12.0 week	-	775.00	-	-	-	775.00 /week	9,300
	Existing Pumps Station Demolition - 2014 EST.	**302.9 CCF**	**297.25**	**30.70**		**220.28**		**548.23 /CCF**	**166,082**
02221 Site Demolition									
02-41-13.33	Minor site demolition, pipe, sewer/water, 30" diameter, remove, excludes excavation, hauling	30.0 lf	14.32	-	-	13.64	-	27.96 /lf	839
02-41-13.33	Minor site demolition, pipe, sewer/water, 42" to 48" diameter, remove, excludes excavation, hauling	70.0 lf	19.09	-	-	18.19	-	37.28 /lf	2,610
02-41-13.33	Minor site demolition, Meter excludes hauling	1.0 ea	1,718.04	-	-	241.44	-	1,959.48 /ea	1,959
02-41-13.33	Minor site demolition, valve box excludes hauling	1.0 ea	231.98	-	-	53.07	-	285.05 /ea	285
02-41-13.33	Minor site demolition, remove existing catch basin or manhole, excludes hauling	1.0 ea	405.96	-	-	92.87	-	498.83 /ea	499
	Site Demolition	**1.0 LSUM**	**4,122.18**			**2,070.00**		**6,192.18 /LSUM**	**6,192**
02221 Site Demolition - Asphalt -									
02-41-13.17	Demolish, remove pavement & curb, remove bituminous pavement, 4" to 6" thick, excludes hauling and disposal fees	2,222.2 sy	6.69	-	-	3.10	-	9.79 /sy	21,755
02-41-13.33	Site demo, for disposal on site, add	370.4 cy	5.05	-	-	6.10	-	11.15 /cy	4,128

REDWOOD CITY PUMP STATION

Phase	Estimate Breakdown	Quantity	Labor Cost/Unit	Material Cost/Unit	Sub Cost/Unit	Equip Cost/Unit	Other Cost/Unit	Total Cost/Unit	Total Net Amount
02221 Site Demolition - Asphalt -									
02-41-19.23	Rubbish handling, dumpster, 40 C.Y., 13 ton capacity, weekly rental, includes one dump per week, cost to be added to demolition cost.	2.0 week	-	775.00	-	-	-	775.00 /week	1,550
	Site Demolition - Asphalt -	**20,000.0 SQFT**	**0.84**	**0.08**		**0.46**		**1.37 /SQFT**	**27,434**
02999 Bypass Pumping									
46-06-20.00	Bypass pumping, mobilization/demobilization	1.0 ls		-	29,200.00		-	29,200.00 /ls	29,200
46-06-20.00	Bypass pumping, bypass pumping plan submittal	1.0 ls		-	4,850.00		-	4,850.00 /ls	4,850
46-06-20.00	Bypass pumping, sewer bypass setup	1.0 ls		-	157,770.00		-	157,770.00 /ls	157,770
46-06-20.00	Bypass pumping, weekday running time	30.0 days		-	12,036.70		-	12,036.70 /days	361,101
46-06-20.00	Bypass pumping, overtime weekend running time	8.0 days		-	14,208.42		-	14,208.42 /days	113,667
46-06-20.00	Bypass pumping, bypass setup & teardown	1.0 ls		-	191,820.00		-	191,820.00 /ls	191,820
	Bypass Pumping	**30.0 DAYS**			**28,613.61**			**28,613.61 /DAYS**	**858,408**
02999 Pump Station Equipment Demolition									
11-05-05.10	Hydraulic gate, canal, flap, knife, slide or sluice, selective demolition	7.0 ea	3,744.09	-	-	846.92	-	4,591.01 /ea	32,137
22-05-05.10	Pipe, metal pipe, 30" thru 36" diameter, selective demolition	200.0 lf	90.60	-	-	2.04	-	92.63 /lf	18,527
02-41-13.38	Selective demoliton - Pump Spools	8.0 ea	315.73	-	-	76.98	-	392.71 /ea	3,142
22-05-05.10	Selective demolition - Pumps	8.0 ea	9,063.88	-	-	-	-	9,063.88 /ea	72,511
22-05-05.10	Selective demolition - Barminutor	3.0 ea	6,042.58	-	-	-	-	6,042.58 /ea	18,128
22-05-05.10	Selective demolition - Motors	8.0 ea	4,531.94	-	-	-	-	4,531.94 /ea	36,256
22-05-05.10	Pipe hanger / support, selective demolition	5.0 ea	15.86	-	-	-	-	15.86 /ea	79
02-22-04.50	General Demolition Crew - HVAC, Blowers and Odor Control	6.0 days	2,772.17	-	-	-	-	2,772.17 /days	16,633
02-22-04.50	General Demolition Crew - Electrical - MCC, Wiring, Conduit, fixtures and Silencers	10.0 days	2,772.16	-	-	-	-	2,772.16 /days	27,722
13-05-05.75	Selective Demolition - Fuel Tank 150 gal	1.0 ea	567.22	-	-	-	-	567.22 /ea	567
26-05-05.25	Generator set, electrical demolition, remove, incl accessories	1.0 ea	8,084.38	-	-	-	-	8,084.38 /ea	8,084
	Pump Station Equipment Demolition	**1.0 LS**	**226,833.23**			**6,951.97**		**233,785.20 /LS**	**233,785**
22201 Yard Piping - Foul Air Pipe									
22-20-00.45	Duct, FRP, 24" dia.	387.0 lnft	171.68	59.00	-	-	-	230.68 /lnft	89,273
22-20-00.45	Fitting, FRP, 90 Elbow, 24" dia.	16.0 ea	1,144.53	471.00	-	-	-	1,615.53 /ea	25,848
22-20-00.45	Fitting, FRP, 45 Elbow, 24" dia.	4.0 ea	755.39	295.00	-	-	-	1,050.39 /ea	4,202
22-20-00.45	Fitting, FRP, Flange, 24" dia.	12.0 ea	228.91	189.00	-	-	-	417.91 /ea	5,015
22-20-00.45	24" FRP Dampers, volume control	4.0 ea	114.45	760.00	-	-	-	874.45 /ea	3,498
22-20-00.45	Fitting, FRP, Weld, 24" dia.	20.0 ea	364.27	59.00	-	-	-	423.27 /ea	8,465

REDWOOD CITY PUMP STATION

Phase	Estimate Breakdown	Quantity	Labor Cost/Unit	Material Cost/Unit	Sub Cost/Unit	Equip Cost/Unit	Other Cost/Unit	Total Cost/Unit	Total Net Amount
	Yard Piping - Foul Air Pipe	**400.0 LFT**	**245.66**	**95.09**				**340.75 /LFT**	**136,301**
22999 Tie Ins Work Allowance									
22-05-00.10	Allowance - Piping, Process - Tie Ins work	2.0 ls	-	-	50,000.00	-	-	50,000.00 /ls	100,000
	Tie Ins Work Allowance	**1.0 LS**			**100,000.00**			**100,000.00 /LS**	**100,000**
31240 Dewatering - 4- 4" sumps 120 Day duration									
31-23-19.20	Dewatering, pumping 8 hours, attended 2 hrs per day, 4" discharge pump used for 8 hours, includes 20 LF of suction hose and 100 LF of discharge hose	480.0 day	76.76	-	-	31.15	-	107.92 /day	51,799
31-23-19.20	Dewatering,sump hole construction,pit with gravel collar,corrugated,12"gravel collar,24"corrugated pipe,14 gauge,includes excavation and gravel pit	32.0 lf	13.53	38.50	-	9.29	-	61.32 /lf	1,962
	Dewatering - 4- 4" sumps 120 Day duration	**120.0 Days**	**310.66**	**10.27**		**127.09**		**448.01 /Days**	**53,761**
32740 Asphaltic Paving									
31-22-16.10	Fine grading, for roadway, base or leveling course, large area, 6,000 S.Y. or more	2,222.2 sy	0.59	-	-	0.38	-	0.96 /sy	2,136
32-11-23.23	Base course drainage layers,aggregate base course for roadways and large paved areas,crushed stone base,compacted,crushed 1-1/2"stone base,4"deep	2,222.2 sy	0.79	4.46	-	0.82	-	6.07 /sy	13,489
32-11-23.23	Base course drainage layers, prepare and roll sub-base, small areas to 2500 S.Y.	2,222.2 sy	1.23	-	-	0.97	-	2.20 /sy	4,881
32-11-26.19	Bituminous-stabilized base courses, for roadways and large paved areas, liquid application to gravel base, asphalt emulsion	444.4 gal	0.20	4.29	-	0.15	-	4.65 /gal	2,065
32-12-16.13	Plant-mix asphalt paving, for highways and large paved areas, binder course, 2" thick, no hauling included	2,222.2 sy	0.95	7.60	-	0.44	-	8.99 /sy	19,970
32-11-23.23	Base course drainage layers, for roadways and large paved areas, stabilization fabric, polypropylene, 6 oz./S.Y.	2,222.2 sy	0.16	1.28	-	0.04	-	1.48 /sy	3,288
32-12-16.13	Plant-mix asphalt paving, for highways and large paved areas, wearing course, 3" thick, no hauling included	2,222.2 sy	1.37	12.55	-	0.61	-	14.53 /sy	32,293
	Asphaltic Paving	**20,000.0 SQFT**	**0.57**	**2.97**		**0.37**		**3.91 /SQFT**	**78,122**
32999 Lanscaping and Fencing Improvments - Allowance									
32-99-99.99	LANDSCAPING AND FENCING IMPOVEMENTS	1.0 LS	-	-	317,000.00	-	-	317,000.00 /LS	317,000
	Lanscaping and Fencing Improvments - Allowance	**1.0 LS**			**317,000.00**			**317,000.00 /LS**	**317,000**

Phase	Estimate Breakdown	Quantity	Labor Cost/Unit	Material Cost/Unit	Sub Cost/Unit	Equip Cost/Unit	Other Cost/Unit	Total Cost/Unit	Total Net Amount
33500 36" Forcemain Trench									
31-23-16.13	Excavating, trench or continuous footing, common earth, 1-1/2 C.Y. excavator, 10' to 14' deep, excludes sheeting or dewatering	148.1 bcy	2.26	-	-	1.95	-	4.20 /bcy	622
31-23-23.16	Concrete (red) envelope/encasement, poured neat	33.1 cy	126.81	77.50	-	2.65	-	206.96 /cy	6,846
31-23-23.16	End bulkheads, plywood, concrete envelope/encasement	32.0 sf	10.06	0.73	-	-	-	10.79 /sf	345
01-54-33.40	Roadway steel plates, 8' x 20' x 1"thick, avg cost per sf, monthly	320.0 sf	-	-	0.49	-	-	0.49 /sf	157
31-23-23.13	Backfill, trench, 6" to 12" lifts, dozer backfilling, compaction with vibrating roller	88.9 ecy	1.32	-	-	2.60	-	3.91 /ecy	348
31-23-23.18	Hauling, excavated or borrow material, loose cubic yards, 3 mile round trip, 2.1 loads/hour, 6 C.Y. dump truck, highway haulers, excludes loading	59.3 lcy	6.79	-	-	5.24	-	12.03 /lcy	713
	36" Forcemain Trench	**130.0 LFT**	**41.31**	**19.90**	**1.21**	**7.06**		**69.47 /LFT**	**9,031**
33500 60" Sanitary Sewer									
31-23-16.13	Excavating, trench or continuous footing, common earth, 1-1/2 C.Y. excavator, 10' to 14' deep, excludes sheeting or dewatering	259.3 bcy	2.26	-	-	1.95	-	4.20 /bcy	1,089
31-23-23.16	Concrete (red) envelope/encasement, poured neat	136.2 cy	126.81	77.50	-	2.65	-	206.96 /cy	28,193
31-23-23.16	End bulkheads, plywood, concrete envelope/encasement	98.0 sf	10.06	0.73	-	-	-	10.79 /sf	1,058
01-54-33.40	Roadway steel plates, 8' x 20' x 1"thick, avg cost per sf, monthly	320.0 sf	-	-	0.49	-	-	0.49 /sf	157
31-23-23.13	Backfill, trench, 6" to 12" lifts, dozer backfilling, compaction with vibrating roller	77.8 ecy	1.32	-	-	2.60	-	3.91 /ecy	304
31-23-23.18	Hauling, excavated or borrow material, loose cubic yards, 3 mile round trip, 2.1 loads/hour, 6 C.Y. dump truck, highway haulers, excludes loading	181.5 lcy	6.79	-	-	5.24	-	12.03 /lcy	2,183
	60" Sanitary Sewer	**100.0 LFT**	**201.79**	**106.29**	**1.57**	**20.19**		**329.84 /LFT**	**32,984**
33500 66" Sanitary Sewer									
31-23-16.13	Excavating, trench or continuous footing, common earth, 1-1/2 C.Y. excavator, 10' to 14' deep, excludes sheeting or dewatering	194.4 bcy	2.26	-	-	1.95	-	4.20 /bcy	817
31-23-23.16	Concrete (red) envelope/encasement, poured neat	115.5 cy	126.81	77.50	-	2.65	-	206.96 /cy	23,901
31-23-23.16	End bulkheads, plywood, concrete envelope/encasement	98.0 sf	10.06	0.73	-	-	-	10.79 /sf	1,058
01-54-33.40	Roadway steel plates, 8' x 20' x 1"thick, avg cost per sf, monthly	320.0 sf	-	-	0.49	-	-	0.49 /sf	157

REDWOOD CITY PUMP STATION

Phase	Estimate Breakdown	Quantity	Labor Cost/Unit	Material Cost/Unit	Sub Cost/Unit	Equip Cost/Unit	Other Cost/Unit	Total Cost/Unit	Total Net Amount
33500 66" Sanitary Sewer									
31-23-23.13	Backfill, trench, 6" to 12" lifts, dozer backfilling, compaction with vibrating roller	13.0 ecy	1.32	-	-	2.60	-	3.91 /ecy	51
31-23-23.18	Hauling, excavated or borrow material, loose cubic yards, 3 mile round trip, 2.1 loads/hour, 6 C.Y. dump truck, highway haulers, excludes loading	181.5 lcy	6.79	-	-	5.24	-	12.03 /lcy	2,183
	66" Sanitary Sewer	**75.0 LFT**	**230.91**	**120.29**	**2.09**	**22.26**		**375.55 /LFT**	**28,166**
33500 24" Foul Air Trench									
31-23-16.13	Excavating, trench or continuous footing, common earth, 1-1/2 C.Y. excavator, 10' to 14' deep, excludes sheeting or dewatering	592.6 bcy	2.26	-	-	1.95	-	4.20 /bcy	2,489
31-23-23.16	Concrete (red) envelope/encasement, poured neat	190.5 cy	126.81	77.50	-	2.65	-	206.96 /cy	39,425
31-23-23.16	End bulkheads, plywood, concrete envelope/encasement	32.0 sf	10.06	0.73	-	-	-	10.79 /sf	345
01-54-33.40	Roadway steel plates, 8' x 20' x 1"thick, avg cost per sf, monthly	320.0 sf	-	-	0.49	-	-	0.49 /sf	157
31-23-23.13	Backfill, trench, 6" to 12" lifts, dozer backfilling, compaction with vibrating roller	355.6 ecy	1.32	-	-	2.60	-	3.91 /ecy	1,392
31-23-23.18	Hauling, excavated or borrow material, loose cubic yards, 3 mile round trip, 2.1 loads/hour, 6 C.Y. dump truck, highway haulers, excludes loading	237.0 lcy	6.79	-	-	5.24	-	12.03 /lcy	2,852
	24" Foul Air Trench	**400.0 LFT**	**69.73**	**36.97**	**0.39**	**9.56**		**116.65 /LFT**	**46,660**
33530 Yard Piping - Sanitary Sewer									
33-41-13.60	Public storm utility drainage piping, reinforced concrete pipe (RCP), 60" diameter, 8' lengths, class 3, excludes excavation or backfill, gaskets	105.0 lf	80.04	136.00	-	23.97	-	240.01 /lf	25,201
33-41-13.60	Public storm utility drainage piping, reinforced concrete pipe (RCP), 66" diameter, 8' lengths, class 3, excludes excavation or backfill, gaskets	78.0 lf	96.04	206.00	-	28.76	-	330.81 /lf	25,803
	Yard Piping - Sanitary Sewer	**183.0 LFT**	**86.86**	**165.84**		**26.01**		**278.71 /LFT**	**51,004**
40120 Yard Piping - 36" Forcemain									
40-05-19.20	Pipe Plain End-Ductile Iron--C-151 36 Inch (900mm)	118.0 lf	-	533.00	-	-	-	533.00 /lf	62,894
40-05-19.20	Fitting Flanged & Bolted-Ductile Iron-Ell45-Non-Specific 36 Inch (900mm)	2.0 ea	-	17,082.01	-	-	-	17,082.01 /ea	34,164
40-05-19.20	Fitting Flanged & Bolted-Ductile Iron-Ell90-Non-Specific 36 Inch (900mm)	1.0 ea	-	10,103.00	-	-	-	10,103.00 /ea	10,103
40-05-19.10	Fitting Flanged & Bolted-Cast Iron-Flange Thr-Non-Specific 36 Inch (900mm)	4.0 ea	-	1,987.70	-	-	-	1,987.70 /ea	7,951

Project Number: 142399
Estimate Issue: 3
Due Date: 5/5/2016
Estimator: Ian Kruljac

REDWOOD CITY PUMP STATION

Phase	Estimate Breakdown	Quantity	Labor Cost/Unit	Material Cost/Unit	Sub Cost/Unit	Equip Cost/Unit	Other Cost/Unit	Total Cost/Unit	Total Net Amount
40120 Yard Piping - 36" Forcemain									
40-05-05.00	Pipe Erection-Handle Fittings-Metal-Std 36 Inch (900mm)	3.0 ea	336.94	-	-	-	-	336.94 /ea	1,011
40-46-16.00	Coatings Shop-Misc-Non-Specific 36 Inch (900mm)	130.0 lf	-	22.37	-	-	-	22.37 /lf	2,908
40-05-19.10	Shop Fabrication-Cast Iron-Shop Cut & Thread & Attach Flange-Class C 36 Inch (900mm)	4.0 ea	-	252.42	-	-	-	252.42 /ea	1,010
40-05-19.20	Pipe Erection-Straight Run-Ductile Iron-Non-Specific 36 Inch (900mm)	130.0 lf	200.19	-	-	-	-	200.19 /lf	26,025
40-05-05.00	Make Up Bolted Joint incl B-7 Nuts, Bolts, 1/16 Inch Rubber Gasket-Cls 150 (PN20) 36 Inch (900mm)	2.0 ea	328.72	1,672.62	-	-	-	2,001.34 /ea	4,003
40-05-07.00	Pipe Support 36 Inch (900mm)	1.0 ea	197.23	250.00	-	-	-	447.23 /ea	447
40-05-07.00	Hanger Rod 36 Inch (900mm)	1.0 ea	164.36	650.00	-	-	-	814.36 /ea	814
40-05-07.00	Hilti-Chemical Anchor - Pipe Support Size 36 Inch (900mm)	5.0 ea	54.79	70.00	-	-	-	124.79 /ea	624
40-46-16.00	Polyethylene Jacket 75 mil-Factory-36 Inch (900mm)	130.0 lf	-	7.79	-	-	-	7.79 /lf	1,012
40-05-05.00	Field Testing-Hydrotest-Non-Specific 36 Inch (900mm)	130.0 lf	128.86	-	-	-	-	128.86 /lf	16,752
	Yard Piping - 36" Forcemain	**130.0 LFT**	**346.77**	**958.74**				**1,305.51 /LFT**	**169,716**
	01 REDWOOD CITY PS SITE WORK	**1.0 LSUM**	**633,910.89**	**302,017.63**	**1,276,035.56**	**121,106.56**		**2,333,070.64 /LSUM**	**2,333,071**

Phase	Estimate Breakdown	Quantity	Labor Cost/Unit	Material Cost/Unit	Sub Cost/Unit	Equip Cost/Unit	Other Cost/Unit	Total Cost/Unit	Total Net Amount
02 REDWOOD CITY WET WELL									
03330 Slabs Wet Well Base Slab - 36" thick									
03-15-13.50	Waterstop, PVC, ribbed type, split, 3/8" thick x 6" wide	203.0 lf	5.61	4.38	-	-	-	9.99 /lf	2,029
03-15-13.50	Waterstop, fittings, rubber, flat, dumbbell or center bulb, field union, 3/8" thick x 9" wide	17.0 ea	14.60	47.50	-	-	-	62.10 /ea	1,056
03-21-10.60	Reinforcing steel, in place, slab on grade, #3 to #7, A615, grade 60, incl labor for accessories, excl material for accessories	1.3 ton	1,070.05	1,000.00	-	-	-	2,070.05 /ton	2,695
03-21-10.60	Reinforcing in place, unloading & sorting, add to above - slabs	1.3 ton	44.16	-	-	7.51	-	51.67 /ton	67
03-21-10.60	Reinforcing in place, crane cost for handling, add to above, slabs	1.3 ton	48.01	-	-	8.16	-	56.18 /ton	73
03-31-05.35	Concrete, ready mix, regular weight, slabs/mats, 4000 psi	170.3 cy	-	107.00	-	-	-	107.00 /cy	18,221
03-31-05.70	Structural concrete, placing, slab on grade, pumped, over 6" thick, includes vibrating, excludes material	170.3 cy	22.78	-	-	4.31	-	27.10 /cy	4,614
03-35-29.30	Concrete finishing, floors, monolithic, screed, float and hand trowel finish	1,488.0 sf	1.23	-	-	-	-	1.23 /sf	1,826
03-39-13.50	Curing, sprayed membrane curing compound	14.9 csf	10.53	11.05	-	-	-	21.58 /csf	321
03-35-29.30	Concrete finishing, floor, dustproofing, solvent-based, 1 coat	1,488.0 sf	0.28	0.18	-	-	-	0.46 /sf	680
	Slabs Wet Well Base Slab - 36" thick	**170.0 CYD**	**53.97**	**127.37**		**4.44**		**185.78 /CYD**	**31,582**
03330 Valve Vault Base Slabs - 18" thick									
31-22-16.10	Fine grading, fine grade for slab on grade, machine	184.7 sy	1.13	-	-	0.72	-	1.85 /sy	341
03-15-13.50	Waterstop, PVC, ribbed type, split, 3/8" thick x 6" wide	184.0 lf	5.61	4.38	-	-	-	9.99 /lf	1,839
03-15-13.50	Waterstop, fittings, rubber, flat, dumbbell or center bulb, field union, 3/8" thick x 9" wide	16.0 ea	14.60	47.50	-	-	-	62.10 /ea	994
03-21-10.60	Reinforcing steel, in place, slab on grade, #3 to #7, A615, grade 60, incl labor for accessories, excl material for accessories	1.8 ton	1,070.05	1,000.00	-	-	-	2,070.05 /ton	3,825
03-21-10.60	Reinforcing in place, unloading & sorting, add to above - slabs	1.8 ton	44.17	-	-	7.51	-	51.68 /ton	96
03-21-10.60	Reinforcing in place, crane cost for handling, add to above, slabs	1.8 ton	48.01	-	-	8.17	-	56.17 /ton	104
03-31-05.35	Concrete, ready mix, regular weight, slabs/mats, 4000 psi	120.9 cy	-	107.00	-	-	-	107.00 /cy	12,931
03-31-05.70	Structural concrete, placing, slab on grade, pumped, over 6" thick, includes vibrating, excludes material	120.9 cy	22.78	-	-	4.31	-	27.10 /cy	3,275

Phase	Estimate Breakdown	Quantity	Labor Cost/Unit	Material Cost/Unit	Sub Cost/Unit	Equip Cost/Unit	Other Cost/Unit	Total Cost/Unit	Total Net Amount
03330 Valve Vault Base Slabs - 18" thick									
03-35-29.30	Concrete finishing, floors, monolithic, screed, float and hand trowel finish	2,112.0 sf	1.23	-	-	-	-	1.23 /sf	2,591
03-39-13.50	Curing, sprayed membrane curing compound	21.1 csf	10.53	11.05	-	-	-	21.58 /csf	456
03-35-29.30	Concrete finishing, floor, dustproofing, solvent-based, 1 coat	2,112.0 sf	0.28	0.18	-	-	-	0.46 /sf	965
	Valve Vault Base Slabs - 18" thick	**120.0 CYD**	**81.45**	**141.32**		**5.70**		**228.47 /CYD**	**27,416**
03345 Concrete Walls - Wet Well 24" Thick									
03-11-13.85	Cip concret forms,walls,steel framed plywd,over 16'20'h,based 50 us purchsd forms,4 us bracing lumber,includes erecting,bracing,stripping and cleaning	13,464.0 sfca	10.41	0.74	-	-	-	11.15 /sfca	150,174
03-15-05.95	Form oil, up to 800 S.F. per gallon, coverage, includes material only	35.9 gal	-	20.50	-	-	-	20.50 /gal	736
03-21-10.60	Reinforcing steel, in place, walls, #3 to #7, A615, grade 60, incl labor for accessories, excl material for accessories	20.2 ton	820.37	1,000.00	-	-	-	1,820.37 /ton	36,764
03-21-10.60	Reinforcing in place, unloading & sorting, add - walls, cols, beams	20.2 ton	44.17	-	-	7.51	-	51.68 /ton	1,044
03-21-10.60	Reinforcing, crane cost for handling, add to above, walls, cols, beams	20.2 ton	48.01	-	-	8.17	-	56.17 /ton	1,134
03-31-05.35	Concrete, ready mix, regular weight, walls/cols/beams, 4000 psi	513.6 cy	-	107.00	-	-	-	107.00 /cy	54,958
03-31-05.70	Structural concrete, placing, walls, pumped, 15" thick, includes vibrating, excludes material	513.6 cy	35.12	-	-	6.65	-	41.77 /cy	21,456
03-35-29.60	Concrete finishing, walls, burlap rub with grout, includes breaking ties and patching voids	6,732.0 sf	1.17	0.04	-	-	-	1.21 /sf	8,138
	Concrete Walls - Wet Well 24" Thick	**513.0 CYD**	**359.75**	**167.88**		**7.28**		**534.90 /CYD**	**274,404**
03345 Concrete Walls - Valve Box - 18" thick									
03-11-13.85	Cip concret forms,walls,steel framed plywd,over 8'16'hg,based 50 us purchsd forms,4 us bracing lumber,includes erecting,bracing,stripping and cleaning	4,117.0 sfca	9.26	0.74	-	-	-	10.00 /sfca	41,157
03-11-13.85	C.I.P. concrete forms, wall, box out for opening, to 16" thick, over 10 S.F. (use perimeter), includes erecting, bracing, stripping and cleaning	120.0 lf	14.88	2.31	-	-	-	17.19 /lf	2,062
03-15-05.12	Chamfer strip, polyvinyl chloride, 3/4" wide with leg	240.0 lf	1.39	0.68	-	-	-	2.07 /lf	497
03-15-05.95	Form oil, up to 800 S.F. per gallon, coverage, includes material only	11.0 gal	-	20.50	-	-	-	20.50 /gal	225

Phase	Estimate Breakdown	Quantity	Labor Cost/Unit	Material Cost/Unit	Sub Cost/Unit	Equip Cost/Unit	Other Cost/Unit	Total Cost/Unit	Total Net Amount
03345 Concrete Walls - Valve Box - 18" thick									
03-21-10.60	Reinforcing steel, in place, walls, #3 to #7, A615, grade 60, incl labor for accessories, excl material for accessories	6.2 ton	820.37	1,000.00	-	-	-	1,820.37 /ton	11,243
03-21-10.60	Reinforcing in place, unloading & sorting, add - walls, cols, beams	6.2 ton	44.17	-	-	7.51	-	51.68 /ton	319
03-21-10.60	Reinforcing, crane cost for handling, add to above, walls, cols, beams	6.2 ton	48.01	-	-	8.17	-	56.17 /ton	347
03-31-05.35	Concrete, ready mix, regular weight, walls/cols/beams, 4000 psi	107.5 cy	-	107.00	-	-	-	107.00 /cy	11,502
03-31-05.70	Structural concrete, placing, walls, pumped, 15" thick, includes vibrating, excludes material	107.5 cy	35.12	-	-	6.65	-	41.77 /cy	4,490
03-35-29.60	Concrete finishing, walls, burlap rub with grout, includes breaking ties and patching voids	1,878.5 sf	1.17	0.04	-	-	-	1.21 /sf	2,271
	Concrete Walls - Valve Box - 18" thick	**107.0 CYD**	**484.46**	**200.61**		**7.59**		**692.65 /CYD**	**74,113**
03345 Concrete Walls - Channel inlet - Mid wall									
03-11-13.85	Cip concret forms,walls,steel framed plywd,over 16'20'h,based 50 us purchsd forms,4 us bracing lumber,includes erecting,bracing,stripping and cleaning	2,880.0 sfca	10.41	0.74	-	-	-	11.15 /sfca	32,123
03-15-05.95	Form oil, up to 800 S.F. per gallon, coverage, includes material only	7.7 gal	-	20.50	-	-	-	20.50 /gal	157
03-21-10.60	Reinforcing steel, in place, walls, #3 to #7, A615, grade 60, incl labor for accessories, excl material for accessories	4.3 ton	820.37	1,000.00	-	-	-	1,820.37 /ton	7,864
03-21-10.60	Reinforcing in place, unloading & sorting, add - walls, cols, beams	4.3 ton	44.17	-	-	7.51	-	51.68 /ton	223
03-21-10.60	Reinforcing, crane cost for handling, add to above, walls, cols, beams	4.3 ton	48.01	-	-	8.17	-	56.17 /ton	243
03-31-05.35	Concrete, ready mix, regular weight, walls/cols/beams, 4000 psi	73.2 cy	-	107.00	-	-	-	107.00 /cy	7,837
03-31-05.70	Structural concrete, placing, walls, pumped, 15" thick, includes vibrating, excludes material	73.2 cy	35.12	-	-	6.65	-	41.77 /cy	3,060
03-35-29.60	Concrete finishing, walls, burlap rub with grout, includes breaking ties and patching voids	2,880.0 sf	1.17	0.04	-	-	-	1.21 /sf	3,482
	Concrete Walls - Channel inlet - Mid wall	**71.0 CYD**	**561.59**	**205.08**		**7.82**		**774.48 /CYD**	**54,988**
03345 Concrete Fillets - Wet Well									

Phase	Estimate Breakdown	Quantity	Labor Cost/Unit	Material Cost/Unit	Sub Cost/Unit	Equip Cost/Unit	Other Cost/Unit	Total Cost/Unit	Total Net Amount
03345 Concrete Fillets - Wet Well									
03-11-13.85	C.I.P. concrete forms, wall, job built, plywood, over 8' to 16' high, 4 use, includes erecting, bracing, stripping and cleaning	2,632.0 sfca	10.55	0.78	-	-	-	11.33 /sfca	29,809
03-15-05.95	Form oil, up to 800 S.F. per gallon, coverage, includes material only	7.0 gal	-	20.50	-	-	-	20.50 /gal	144
03-21-10.60	Reinforcing steel, in place, walls, #3 to #7, A615, grade 60, incl labor for accessories, excl material for accessories	2.6 ton	820.37	1,000.00	-	-	-	1,820.37 /ton	4,791
03-21-10.60	Reinforcing in place, unloading & sorting, add - walls, cols, beams	2.6 ton	44.17	-	-	7.52	-	51.68 /ton	136
03-21-10.60	Reinforcing, crane cost for handling, add to above, walls, cols, beams	2.6 ton	48.01	-	-	8.17	-	56.17 /ton	148
03-31-05.35	Concrete, ready mix, regular weight, walls/cols/beams, 4000 psi	248.6 cy	-	107.00	-	-	-	107.00 /cy	26,598
03-31-05.70	Structural concrete, placing, walls, pumped, 15" thick, includes vibrating, excludes material	254.0 cy	35.12	-	-	6.65	-	41.77 /cy	10,611
03-35-29.60	Concrete finishing, walls, burlap rub with grout, includes breaking ties and patching voids	1,316.0 sf	1.17	0.04	-	-	-	1.21 /sf	1,591
	Concrete Fillets - Wet Well	**254.0 CYD**	**159.91**	**123.93**		**6.81**		**290.66 /CYD**	**73,828**
03345 Concrete - OG Ramps - Wet Well									
03-15-05.95	Form oil, up to 800 S.F. per gallon, coverage, includes material only	2.1 gal	-	20.50	-	-	-	20.50 /gal	43
03-21-10.60	Reinforcing steel, in place, walls, #3 to #7, A615, grade 60, incl labor for accessories, excl material for accessories	0.8 ton	820.37	1,000.00	-	-	-	1,820.37 /ton	1,365
03-21-10.60	Reinforcing in place, unloading & sorting, add - walls, cols, beams	0.9 ton	44.17	-	-	7.52	-	51.69 /ton	46
03-21-10.60	Reinforcing, crane cost for handling, add to above, walls, cols, beams	0.9 ton	48.01	-	-	8.17	-	56.18 /ton	50
03-31-05.35	Concrete, ready mix, regular weight, walls/cols/beams, 4000 psi	50.0 cy	-	107.00	-	-	-	107.00 /cy	5,350
03-31-05.70	Structural concrete, placing, walls, pumped, 15" thick, includes vibrating, excludes material	50.0 cy	35.12	-	-	6.65	-	41.77 /cy	2,089
03-35-29.60	Concrete finishing, walls, burlap rub with grout, includes breaking ties and patching voids	200.0 sf	1.17	0.04	-	-	-	1.21 /sf	242
	Concrete - OG Ramps - Wet Well	**50.0 CYD**	**53.75**	**123.02**		**6.93**		**183.70 /CYD**	**9,185**

03350 Elevated Slab - Wet Well and Valve Vault

Phase	Estimate Breakdown	Quantity	Labor Cost/Unit	Material Cost/Unit	Sub Cost/Unit	Equip Cost/Unit	Other Cost/Unit	Total Cost/Unit	Total Net Amount
03350 Elevated Slab - Wet Well and Valve Vault									
03-11-13.35	C.I.P. concrete forms, elevated slab, flat plate, plywood, to 15' high, 4 use, includes shoring, erecting, bracing, stripping and cleaning	3,585.5 sf	7.44	1.26	-	-	-	8.70 /sf	31,187
03-11-13.35	C.I.P. concrete forms, elevated slab, edge forms, to 6" high, 4 use, includes shoring, erecting, bracing, stripping and cleaning	243.0 lf	5.38	0.21	-	-	-	5.59 /lf	1,358
03-11-13.35	Cip concrete forms,elevated slab,box-out for shallow slab openings,over 10 sf (use perimeter),includes shoring,erecting,bracing,stripping and cleaning	768.0 lf	6.94	1.61	-	-	-	8.55 /lf	6,568
03-11-13.35	C.I.P. concrete forms, elevated slab, depressed area, to 12" high, 4 use, includes shoring, erecting, bracing, stripping and cleaning	768.0 lf	8.97	1.02	-	-	-	9.99 /lf	7,670
03-11-13.35	C.I.P. concrete forms, elevated slab, perimeter deck and rail, straight, includes shoring, erecting, bracing, stripping and cleaning	243.0 lf	29.89	12.45	-	-	-	42.34 /lf	10,288
03-15-05.70	Shores, reshoring at elevated decks, allow	3,227.0 sf	1.04	0.58	-	-	-	1.62 /sf	5,237
03-21-10.60	Reinforcing steel, in place, elevated slabs, #4 to #7, A615, grade 60, incl labor for accessories, excl material for accessories	12.3 ton	848.66	1,000.00	-	-	-	1,848.66 /ton	22,757
03-21-10.60	Reinforcing in place, unloading & sorting, add to above - decks	0.1 ton	44.20	-	-	7.50	-	51.65 /ton	5
03-21-10.60	Reinforcing steel, crane cost for handling, maximum, add	0.1 ton	126.20	-	-	21.50	-	147.70 /ton	15
03-31-05.35	Concrete, ready mix, regular weight, elevated decks, 4000 psi	205.2 cy	-	107.00	-	-	-	107.00 /cy	21,953
03-31-05.70	Structural concrete, placing, elevated slab, with crane and bucket, over 10" thick, includes vibrating, excludes material	205.2 cy	37.09	-	-	9.53	-	46.61 /cy	9,563
03-35-29.30	Concrete finishing, floors, monolithic, screed finish	3,585.5 sf	0.32	-	-	-	-	0.32 /sf	1,159
03-39-13.50	Curing, sprayed membrane curing compound, elevated decks	35.9 csf	10.53	11.05	-	-	-	21.58 /csf	774
03-35-29.30	Concrete finishing, floor, dustproofing, solvent-based, 2 coats	3,585.5 sf	0.40	0.63	-	-	-	1.03 /sf	3,708
	Elevated Slab - Wet Well and Valve Vault	**205.0 CYD**	**350.64**	**236.12**		**9.55**		**596.31 /CYD**	**122,243**
05999 Access Hatches									
08-31-13.35	Doors, specialty, access, floor, industrial, aluminum, 150 psf L.L., single leaf, 3' x 3', 95 lb	16.0 opng	238.67	1,200.00	-	-	-	1,438.67 /opng	23,019

REDWOOD CITY PUMP STATION

Phase	Estimate Breakdown	Quantity	Labor Cost/Unit	Material Cost/Unit	Sub Cost/Unit	Equip Cost/Unit	Other Cost/Unit	Total Cost/Unit	Total Net Amount
	Access Hatches	**16.0 EACH**	**238.67**	**1,200.00**				**1,438.67 /EACH**	**23,019**
11999 Pumps Station - Pumps and Instr..									
46-06-22.00	Submersible pump - 400 HP Pumps	4.0 ea	6,867.18	200,000.00	-	2,500.00		209,367.18 /ea	837,469
46-06-22.00	Submersible pump Local Control Panel and VFD	4.0 ea	2,746.87	45,000.00	-	250.00	0.00	47,996.87 /ea	191,987
27-20-57.00	LIT - Level Indicating Ultrasonic or Std - Install, Calibrate, Test, Loop Check	4.0 ea	1,464.29	2,500.00	-	-	-	3,964.29 /ea	15,857
27-20-07.00	Ultrasonic Level Transmitters	4.0 ea	464.85	2,798.00	-	-	-	3,262.85 /ea	13,051
27-20-10.00	AI - Comb. Gas Analyzers	4.0 ea	464.85	3,715.00	-	-	-	4,179.85 /ea	16,719
27-20-53.00	AI - Analyzer Indicator - Install, Calibrate, Test, Loop Check	4.0 ea	883.22		-	-	-	883.22 /ea	3,533
46-06-00.00	Submersible pump - 50 HP Pumps	4.0 ea	43,381.72	65,705.00	-	500.00	-	109,586.73 /ea	438,347
46-06-22.00	Submersible pump Local Control Panel and VFD	4.0 ea	2,746.87	39,996.00	-	250.00		42,992.87 /ea	171,971
	Pumps Station - Pumps and Instr..	**8.0 Each**	**29,509.93**	**179,857.00**		**1,750.00**		**211,116.93 /Each**	**1,688,935**
31250 Shoring Systems - Sheet Pile									
31-41-16.10	Sheet piling, steel, 38 psf, 25' excavation, per S.F., drive, extract and salvage, excludes wales	8,400.0 sf	15.42	10.15	-	6.90	-	32.47 /sf	272,775
31-41-16.10	Sheet piling, wales, connections and struts, 2/3 salvage	21.6 ton	-	480.00	-	-	-	480.00 /ton	10,368
	Shoring Systems - Sheet Pile	**8,400.0 SQFT**	**15.42**	**11.38**		**6.90**		**33.71 /SQFT**	**283,143**
31315 Excavation and Backfill									
31-23-16.42	Excavating, bulk bank measure, 3 C.Y. capacity = 250 C.Y./hour, shovel, excluding truck loading	7,111.0 bcy	0.61	-	-	0.80	-	1.41 /bcy	9,997
31-23-23.18	Hauling, excavated or borrow material, loose cubic yards, 5 mile round trip, 1 load/hour, 16.5 C.Y. dump trailer, highway haulers, excludes loading	9,278.0 lcy	5.03	-	-	6.86	-	11.89 /lcy	110,296
31-23-23.16	Bedding, crushed stone 3/4" to 1/2"	2,654.0 lcy	10.83	23.50	-	2.48	-	36.80 /lcy	97,673
31-23-23.13	Backfill, trench, 6" to 12" lifts, dozer backfilling, compaction with vibrating roller	2,167.0 ecy	1.32	-	-	2.60	-	3.91 /ecy	8,482
	Excavation and Backfill	**9,278.0 CYD**	**8.90**	**6.72**		**8.79**		**24.41 /CYD**	**226,448**
40120 Piping, Flanges, Supports and Valves - Coated									
40-05-19.20	Pipe Plain End-Ductile Iron--C-151 12 Inch (300mm)	93.3 lf	-	35.00	-	-	-	35.00 /lf	3,267
40-05-19.20	Pipe Plain End-Ductile Iron--C-151 30 Inch (750mm)	53.3 lf	-	242.00	-	-	-	242.00 /lf	12,907
40-05-19.20	Pipe Plain End-Ductile Iron--C-151 48 Inch (1200mm)	34.2 lf	-	1,524.00	-	-	-	1,524.00 /lf	52,160
40-05-19.20	Fitting Flanged & Bolted-Ductile Iron-Ell90-Non-Specific 12 Inch (300mm)	4.0 ea	-	1,375.00	-	-	-	1,375.00 /ea	5,500

REDWOOD CITY PUMP STATION

Phase	Estimate Breakdown	Quantity	Labor Cost/Unit	Material Cost/Unit	Sub Cost/Unit	Equip Cost/Unit	Other Cost/Unit	Total Cost/Unit	Total Net Amount
40120 Piping, Flanges, Supports and Valves - Coated									
40-05-19.20	Fitting Flanged & Bolted-Ductile Iron-Ell90-Non-Specific 30 Inch (750mm)	4.0 ea	-	8,189.00	-	-	-	8,189.00 /ea	32,756
40-05-19.20	Fitting Flanged & Bolted-Ductile Iron-Ell90-Non-Specific 42 Inch (1050mm)	2.0 ea	-	9,548.00	-	-	-	9,548.00 /ea	19,096
40-05-19.20	Fitting Flanged & Bolted-Ductile Iron-Reducer 1 Dia-Non-Specific 12 Inch (300mm)	4.0 ea	-	1,025.82	-	-	-	1,025.82 /ea	4,103
40-05-19.20	Fitting Flanged & Bolted-Ductile Iron-Reducer 1 Dia-Non-Specific 30 Inch (750mm)	4.0 ea	-	9,707.60	-	-	-	9,707.60 /ea	38,830
40-05-19.20	Fitting Flanged & Bolted-Ductile Iron-Reducer 1 Dia-Non-Specific 42 Inch (1050mm)	2.0 ea	-	10,015.00	-	-	-	10,015.00 /ea	20,030
40-05-19.20	Fitting Flanged & Bolted-Ductile Iron-Reducer 1 Dia-Non-Specific 48 Inch (1200mm)	2.0 ea	-	10,514.00	-	-	-	10,514.00 /ea	21,028
40-05-19.20	Fitting Flanged & Bolted-Ductile Iron-Tee-Non-Specific 42 Inch (1050mm)	2.0 ea	-	11,671.00	-	-	-	11,671.00 /ea	23,342
40-05-19.20	Fitting Flanged & Bolted-Ductile Iron-Tee-Non-Specific 48 Inch (1200mm)	4.0 ea	-	12,654.00	-	-	-	12,654.00 /ea	50,616
40-05-19.10	Fitting Flanged & Bolted-Cast Iron-Flange Thr-Cls 125 12 Inch (300mm)	28.0 ea	-	102.78	-	-	-	102.78 /ea	2,878
40-05-19.10	Fitting Flanged & Bolted-Cast Iron-Flange Thr-Non-Specific 30 Inch (750mm)	28.0 ea	-	1,626.30	-	-	-	1,626.30 /ea	45,536
40-05-05.00	Pipe Erection-Handle Fittings-Metal-Std 12 Inch (300mm)	8.0 ea	145.84	-	-	-	-	145.84 /ea	1,167
40-05-05.00	Pipe Erection-Handle Fittings-Metal-Std 30 Inch (750mm)	8.0 ea	287.63	-	-	-	-	287.63 /ea	2,301
40-05-05.00	Pipe Erection-Handle Fittings-Metal-Std 42 Inch (1050mm)	6.0 ea	386.25	-	-	-	-	386.25 /ea	2,317
40-05-05.00	Pipe Erection-Handle Fittings-Metal-Std 48 Inch (1200mm)	6.0 ea	435.55	-	-	-	-	435.55 /ea	2,613
40-46-16.00	Coatings Shop-Misc-Non-Specific 12 Inch (300mm)	120.0 lf	-	4.11	-	-	-	4.11 /lf	493
40-46-16.00	Coatings Shop-Misc-Non-Specific 30 Inch (750mm)	120.0 lf	-	18.65	-	-	-	18.65 /lf	2,238
40-46-16.00	Coatings Shop-Misc-Non-Specific 42 Inch (1050mm)	20.0 lf	-	26.11	-	-	-	26.11 /lf	522
40-46-16.00	Coatings Shop-Misc-Non-Specific 48 Inch (1200mm)	70.0 lf	-	29.83	-	-	-	29.83 /lf	2,088
40-05-65.23	Valve Flanged & Bolted-Cast Steel-Check-Cls 150 (PN20) 12 Inch (300mm)	4.0 ea	-	6,338.98	-	-	-	6,338.98 /ea	25,356

REDWOOD CITY PUMP STATION

Phase	Estimate Breakdown	Quantity	Labor Cost/Unit	Material Cost/Unit	Sub Cost/Unit	Equip Cost/Unit	Other Cost/Unit	Total Cost/Unit	Total Net Amount
40120 Piping, Flanges, Supports and Valves - Coated									
40-05-65.23	Valve Flanged & Bolted-Cast Steel-Check-Cls 150 (PN20) 30 Inch (750mm)	4.0 ea	-	63,804.04	-	-	-	63,804.04 /ea	255,216
40-05-62.00	Valve Flanged & Bolted-Cast Steel-Plug-Cls 150 (PN20) 12 Inch (300mm)	4.0 ea	-	5,235.81	-	-	-	5,235.81 /ea	20,943
40-05-62.00	Valve Flanged & Bolted-Cast Steel-Plug-Cls 150 (PN20) 30 Inch (750mm)	4.0 ea	-	52,700.34	-	-	-	52,700.34 /ea	210,801
40-05-51.00	Pipe Erection-Handle Valves-Metal-Cls 150 (PN20) 12 Inch (300mm)	8.0 ea	373.43	-	-	-	-	373.43 /ea	2,987
40-05-51.00	Pipe Erection-Handle Valves-Metal-Cls 150 (PN20) 30 Inch (750mm)	8.0 ea	807.33	-	-	-	-	807.33 /ea	6,459
40-05-19.10	Shop Fabrication-Cast Iron-Shop Cut & Thread & Attach Flange-Class C 12 Inch (300mm)	28.0 ea	-	41.30	-	-	-	41.30 /ea	1,156
40-05-19.10	Shop Fabrication-Cast Iron-Shop Cut & Thread & Attach Flange-Class C 30 Inch (750mm)	28.0 ea	-	143.65	-	-	-	143.65 /ea	4,022
40-05-19.20	Pipe Erection-Straight Run-Ductile Iron-Non-Specific 12 Inch (300mm)	120.0 lf	68.05	-	-	-	-	68.05 /lf	8,165
40-05-19.20	Pipe Erection-Straight Run-Ductile Iron-Non-Specific 30 Inch (750mm)	120.0 lf	165.67	-	-	-	-	165.67 /lf	19,881
40-05-19.20	Pipe Erection-Straight Run-Ductile Iron-Non-Specific 42 Inch (1050mm)	20.0 lf	233.72	-	-	-	-	233.72 /lf	4,674
40-05-19.20	Pipe Erection-Straight Run-Ductile Iron-Non-Specific 48 Inch (1200mm)	70.0 lf	268.24	-	-	-	-	268.24 /lf	18,776
40-05-05.00	Make Up Bolted Joint incl B-7 Nuts, Bolts, 1/16 Inch Rubber Gasket-Cls 150 (PN20) 12 Inch (300mm)	16.0 ea	71.22	119.10	-	-	-	190.32 /ea	3,045
40-05-05.00	Make Up Bolted Joint incl B-7 Nuts, Bolts, 1/16 Inch Rubber Gasket-Cls 150 (PN20) 30 Inch (750mm)	16.0 ea	219.15	904.78	-	-	-	1,123.92 /ea	17,983
40-05-07.00	Pipe Support 12 Inch (300mm)	8.0 ea	136.97	25.00	-	-	-	161.97 /ea	1,296
40-05-07.00	Pipe Support 30 Inch (750mm)	8.0 ea	197.23	100.00	-	-	-	297.23 /ea	2,378
40-05-07.00	Pipe Support 42 Inch (1050mm)	4.0 ea	273.93	500.00	-	-	-	773.93 /ea	3,096
40-05-07.00	Pipe Support 48 Inch (1200mm)	4.0 ea	273.93	500.00	-	-	-	773.93 /ea	3,096
40-05-07.00	Hilti-Chemical Anchor - Pipe Support Size 12 Inch (300mm)	32.0 ea	32.87	35.00	-	-	-	67.87 /ea	2,172
40-05-07.00	Hilti-Chemical Anchor - Pipe Support Size 30 Inch (750mm)	32.0 ea	54.79	65.00	-	-	-	119.79 /ea	3,833
40-05-07.00	Hilti-Chemical Anchor - Pipe Support Size 42 Inch (1050mm)	16.0 ea	54.79	75.00	-	-	-	129.79 /ea	2,077
40-05-07.00	Hilti-Chemical Anchor - Pipe Support Size 48 Inch (1200mm)	16.0 ea	54.79	75.00	-	-	-	129.79 /ea	2,077

REDWOOD CITY PUMP STATION

Phase	Estimate Breakdown	Quantity	Labor Cost/Unit	Material Cost/Unit	Sub Cost/Unit	Equip Cost/Unit	Other Cost/Unit	Total Cost/Unit	Total Net Amount
40120 Piping, Flanges, Supports and Valves - Coated									
40-46-16.00	FBEpoxy Coating 40 mil-Factory-12 Inch (300mm)	120.0 lf	-	4.86	-	-	-	4.86 /lf	583
40-46-16.00	FBEpoxy Coating 40 mil-Factory-30 Inch (750mm)	120.0 lf	-	17.59	-	-	-	17.59 /lf	2,111
40-46-16.00	FBEpoxy Coating 40 mil-Factory-42 Inch (1050mm)	20.0 lf	-	26.38	-	-	-	26.38 /lf	528
40-46-16.00	FBEpoxy Coating 40 mil-Factory-48 Inch (1200mm)	70.0 lf	-	30.78	-	-	-	30.78 /lf	2,155
40-05-05.00	Field Testing-Hydrotest-Non-Specific 12 Inch (300mm)	120.0 lf	17.09	-	-	-	-	17.09 /lf	2,051
40-05-05.00	Field Testing-Hydrotest-Non-Specific 30 Inch (750mm)	120.0 lf	89.85	-	-	-	-	89.85 /lf	10,782
40-05-05.00	Field Testing-Hydrotest-Non-Specific 42 Inch (1050mm)	20.0 lf	175.10	-	-	-	-	175.10 /lf	3,502
40-05-05.00	Field Testing-Hydrotest-Non-Specific 48 Inch (1200mm)	70.0 lf	228.35	-	-	-	-	228.35 /lf	15,985
	Piping, Flanges, Supports and Valves - Coated	**330.0 LFT**	**350.70**	**2,688.62**				**3,039.32 /LFT**	**1,002,975**
46999 Slide Gates									
35-20-16.73	Slide gates, hydraulic structures, steel, self contained, 66" x 66", incl. anchor bolts & grout - Manual	2.0 ea	4,914.27	30,000.00	-	1,111.62	-	36,025.89 /ea	72,052
35-20-16.73	Slide gates, hydraulic structures, steel, self contained, 66" x 66", incl. anchor bolts & grout - Electric Acutuated	2.0 ea	7,507.91	75,000.00	-	1,698.31	-	84,206.22 /ea	168,412
	Slide Gates	**6.0 Each**	**4,140.73**	**35,000.00**		**936.64**		**40,077.37 /Each**	**240,464**
	02 REDWOOD CITY WET WELL	**1.0 LSUM**	**1,002,951.25**	**2,960,091.44**		**169,701.07**		**4,132,743.76 /LSUM**	**4,132,744**

Phase	Estimate Breakdown	Quantity	Labor Cost/Unit	Material Cost/Unit	Sub Cost/Unit	Equip Cost/Unit	Other Cost/Unit	Total Cost/Unit	Total Net Amount
03 REDWOOD SCREENING BUILDING									
03330 Slabs Screening building Base Slab - 36" thick									
31-22-16.10	Fine grading, fine grade for slab on grade, machine	142.2 sy	1.13	-	-	0.72	-	1.85 /sy	263
03-05-13.25	Aggregate, stone, 3/4" to 1-1/2", prices per C.Y., includes material only	47.4 cy	-	34.00	-	-	-	34.00 /cy	1,612
03-15-13.50	Waterstop, PVC, ribbed type, split, 3/8" thick x 6" wide	144.0 lf	5.61	4.38	-	-	-	9.99 /lf	1,439
03-15-13.50	Waterstop, fittings, rubber, flat, dumbbell or center bulb, field union, 3/8" thick x 9" wide	12.0 ea	14.60	47.50	-	-	-	62.10 /ea	745
03-21-10.60	Reinforcing steel, in place, slab on grade, #3 to #7, A615, grade 60, incl labor for accessories, excl material for accessories	1.1 ton	1,070.05	1,000.00	-	-	-	2,070.05 /ton	2,318
03-21-10.60	Reinforcing in place, unloading & sorting, add to above - slabs	1.1 ton	44.17	-	-	7.51	-	51.68 /ton	58
03-21-10.60	Reinforcing in place, crane cost for handling, add to above, slabs	1.1 ton	48.01	-	-	8.17	-	56.18 /ton	63
03-31-05.35	Concrete, ready mix, regular weight, slabs/mats, 4000 psi	146.5 cy	-	107.00	-	-	-	107.00 /cy	15,674
03-31-05.70	Structural concrete, placing, slab on grade, pumped, over 6" thick, includes vibrating, excludes material	146.5 cy	22.78	-	-	4.31	-	27.10 /cy	3,969
03-35-29.30	Concrete finishing, floors, monolithic, screed and bull float(darby) finish	1,280.0 sf	0.39	-	-	-	-	0.39 /sf	497
03-39-13.50	Curing, sprayed membrane curing compound	12.8 csf	10.53	11.05	-	-	-	21.58 /csf	276
03-35-29.30	Concrete finishing, floor, dustproofing, solvent-based, 1 coat	1,280.0 sf	0.28	0.18	-	-	-	0.46 /sf	585
	Slabs Screening building Base Slab - 36" thick	**149.0 CYD**	**45.43**	**134.09**		**5.05**		**184.56 /CYD**	**27,500**
03340 Concrete Beams - 12 X 24 (5)									
03-11-13.20	C.I.P. concrete forms, beams and girders, interior, plywood, 24" wide, 4 use, includes shoring, erecting, bracing, stripping and cleaning	800.0 sfca	10.55	0.84	-	-	-	11.39 /sfca	9,109
03-15-05.95	Form oil, up to 800 S.F. per gallon, coverage, includes material only	2.1 gal	-	20.50	-	-	-	20.50 /gal	44
03-15-05.70	Shores, horizontal members, joists and stringers, aluminum, includes erect and strip by hand	50.0 ea	24.33	-	-	-	-	24.33 /ea	1,216
03-15-05.70	Shores, horizontal members, adjustable beam, steel, includes erect and strip by hand	30.0 ea	32.44	-	-	-	-	32.44 /ea	973
03-15-05.70	Shores, vertical members, to 13' high, includes erect and strip by hand	45.0 ea	29.19	-	-	-	-	29.19 /ea	1,314

Phase	Estimate Breakdown	Quantity	Labor Cost/Unit	Material Cost/Unit	Sub Cost/Unit	Equip Cost/Unit	Other Cost/Unit	Total Cost/Unit	Total Net Amount
03340 Concrete Beams - 12 X 24 (5)									
03-15-05.70	Shores, horizontal, rent for job duration, aluminum joists, @ 2' O.C., per month	160.0 sffl	-	0.39	-	-	-	0.39 /sffl	62
03-15-05.70	Shores, reshoring	160.0 sf	1.04	0.58	-	-	-	1.62 /sf	260
03-21-10.60	Reinforcing steel, in place, beams and girders, #8 to # 18, A615, grade 60, incl labor for accessories, excl material for accessories	1.2 ton	911.53	1,000.00	-	-	-	1,911.53 /ton	2,265
03-23-05.50	Prestressing steel, grouted strand in beams, 50' span, 300 kip, post-tensioned in field	1,440.0 lb	1.75	1.14	-	0.04	-	2.93 /lb	4,218
03-21-10.60	Reinforcing in place, unloading & sorting, add - walls, cols, beams	1.9 ton	44.17	-	-	7.51	-	51.68 /ton	98
03-21-10.60	Reinforcing, crane cost for handling, add to above, walls, cols, beams	1.9 ton	48.01	-	-	8.17	-	56.17 /ton	107
03-31-05.35	Concrete, ready mix, regular weight, walls/cols/beams, 4000 psi	12.4 cy	-	107.00	-	-	-	107.00 /cy	1,332
03-31-05.70	Structural concrete, placing, beam, large, elevated, with crane and bucket, includes vibrating, excludes material	12.4 cy	74.17	-	-	19.05	-	93.23 /cy	1,160
03-35-29.60	Concrete finishing, walls, burlap rub with grout, includes breaking ties and patching voids	800.0 sf	1.17	0.04	-	-	-	1.21 /sf	967
	Concrete Beams - 12 X 24 (5)	**13.0 CYD**	**1,364.26**	**389.31**		**25.23**		**1,778.80 /CYD**	**23,124**
03345 Concrete Walls - Exterior 18" Thick									
03-11-13.85	Cip concret forms,walls,steel framed plywd,over 16'20'h,based 50 us purchsd forms,4 us bracing lumber,includes erecting,bracing,stripping and cleaning	6,624.0 sfca	10.41	0.74	-	-	-	11.15 /sfca	73,882
03-15-05.95	Form oil, up to 800 S.F. per gallon, coverage, includes material only	17.7 gal	-	20.50	-	-	-	20.50 /gal	362
03-21-10.60	Reinforcing steel, in place, walls, #3 to #7, A615, grade 60, incl labor for accessories, excl material for accessories	9.9 ton	820.37	1,000.00	-	-	-	1,820.37 /ton	18,087
03-21-10.60	Reinforcing in place, unloading & sorting, add - walls, cols, beams	9.9 ton	44.17	-	-	7.51	-	51.68 /ton	513
03-21-10.60	Reinforcing, crane cost for handling, add to above, walls, cols, beams	9.9 ton	48.01	-	-	8.17	-	56.18 /ton	558
03-31-05.35	Concrete, ready mix, regular weight, walls/cols/beams, 4000 psi	193.2 cy	-	107.00	-	-	-	107.00 /cy	20,672
03-31-05.70	Structural concrete, placing, walls, pumped, 15" thick, includes vibrating, excludes material	193.2 cy	35.12	-	-	6.65	-	41.77 /cy	8,071
03-35-29.60	Concrete finishing, walls, burlap rub with grout, includes breaking ties and patching voids	3,312.0 sf	1.17	0.04	-	-	-	1.21 /sf	4,004

Phase	Estimate Breakdown	Quantity	Labor Cost/Unit	Material Cost/Unit	Sub Cost/Unit	Equip Cost/Unit	Other Cost/Unit	Total Cost/Unit	Total Net Amount
	Concrete Walls - Exterior 18" Thick	**193.0 CYD**	**459.61**	**186.55**		**7.47**		**653.63 /CYD**	**126,150**
03345 Concrete Walls - Interior Channels and walls									
03-11-13.85	Cip concret forms,walls,steel framed plywd,over 8'16'hg,based 50 us purchsd forms,4 us bracing lumber,includes erecting,bracing,stripping and cleaning	3,260.0 sfca	9.26	0.74	-	-	-	10.00 /sfca	32,590
03-15-05.95	Form oil, up to 800 S.F. per gallon, coverage, includes material only	8.7 gal	-	20.50	-	-	-	20.50 /gal	178
03-21-10.60	Reinforcing steel, in place, walls, #3 to #7, A615, grade 60, incl labor for accessories, excl material for accessories	4.9 ton	820.37	1,000.00	-	-	-	1,820.37 /ton	8,902
03-21-10.60	Reinforcing in place, unloading & sorting, add - walls, cols, beams	4.9 ton	44.17	-	-	7.51	-	51.68 /ton	253
03-21-10.60	Reinforcing, crane cost for handling, add to above, walls, cols, beams	4.9 ton	48.01	-	-	8.17	-	56.17 /ton	275
03-31-05.35	Concrete, ready mix, regular weight, walls/cols/beams, 4000 psi	106.8 cy	-	107.00	-	-	-	107.00 /cy	11,422
03-31-05.70	Structural concrete, placing, walls, pumped, 15" thick, includes vibrating, excludes material	106.8 cy	35.12	-	-	6.65	-	41.77 /cy	4,459
03-35-29.60	Concrete finishing, walls, burlap rub with grout, includes breaking ties and patching voids	1,630.0 sf	1.17	0.04	-	-	-	1.21 /sf	1,970
	Concrete Walls - Interior Channels and walls	**106.0 CYD**	**380.14**	**178.94**		**7.42**		**566.50 /CYD**	**60,049**
03350 Elevated Slabs - Ground Floor 18" Thick									
03-11-13.35	C.I.P. concrete forms, elevated slab, flat plate, plywood, to 15' high, 4 use, includes shoring, erecting, bracing, stripping and cleaning	1,280.0 sf	7.44	1.26	-	-	-	8.70 /sf	11,133
03-11-13.35	C.I.P. concrete forms, elevated slab, edge forms, to 6" high, 4 use, includes shoring, erecting, bracing, stripping and cleaning	144.0 lf	5.38	0.21	-	-	-	5.59 /lf	805
03-21-10.60	Reinforcing steel, in place, elevated slabs, #4 to #7, A615, grade 60, incl labor for accessories, excl material for accessories	0.1 ton	848.60	1,000.00	-	-	-	1,848.60 /ton	120
03-23-05.50	Prestressing steel, ungrouted single strand, 100' elevated slab, 35 kip, post-tensioned in field	1,024.0 lb	1.68	0.63	-	0.02	-	2.33 /lb	2,386
03-21-10.60	Reinforcing in place, unloading & sorting, add to above - decks	0.5 ton	44.17	-	-	7.50	-	51.68 /ton	28
03-21-10.60	Reinforcing steel, crane cost for handling, maximum, add	0.5 ton	126.20	-	-	21.48	-	147.67 /ton	81
03-31-05.35	Concrete, ready mix, regular weight, elevated decks, 5000 psi	74.7 cy	-	113.00	-	-	-	113.00 /cy	8,437

Phase	Estimate Breakdown	Quantity	Labor Cost/Unit	Material Cost/Unit	Sub Cost/Unit	Equip Cost/Unit	Other Cost/Unit	Total Cost/Unit	Total Net Amount
03350 Elevated Slabs - Ground Floor 18" Thick									
03-31-05.70	Structural concrete, placing, elevated slab, with crane and bucket, over 10" thick, includes vibrating, excludes material	74.7 cy	37.09	-	-	9.53	-	46.61 /cy	3,480
03-35-29.30	Concrete finishing, floors, monolithic, screed finish	1,280.0 sf	0.32	-	-	-	-	0.32 /sf	414
03-39-13.50	Curing, sprayed membrane curing compound, elevated decks	12.8 csf	10.53	11.05	-	-	-	21.58 /csf	276
03-35-29.30	Concrete finishing, floor, dustproofing, solvent-based, 2 coats	1,280.0 sf	0.40	0.63	-	-	-	1.03 /sf	1,324
	Elevated Slabs - Ground Floor 18" Thick	**74.0 CYD**	**216.20**	**158.63**		**10.12**		**384.95 /CYD**	**28,486**
03350 Elevated Slabs - Elavation 95 18" Thick									
03-11-13.35	C.I.P. concrete forms, elevated slab, flat plate, plywood, to 15' high, 4 use, includes shoring, erecting, bracing, stripping and cleaning	981.0 sf	7.44	1.26	-	-	-	8.70 /sf	8,533
03-15-05.70	Shores, reshoring at elevated decks, allow	981.0 sf	1.04	0.58	-	-	-	1.62 /sf	1,592
03-21-10.60	Reinforcing steel, in place, elevated slabs, #4 to #7, A615, grade 60, incl labor for accessories, excl material for accessories	0.1 ton	848.60	1,000.00	-	-	-	1,848.60 /ton	92
03-23-05.50	Prestressing steel, ungrouted single strand, 100' elevated slab, 35 kip, post-tensioned in field	784.8 lb	1.68	0.63	-	0.02	-	2.33 /lb	1,829
03-21-10.60	Reinforcing in place, unloading & sorting, add to above - decks	0.4 ton	44.16	-	-	7.50	-	51.66 /ton	22
03-21-10.60	Reinforcing steel, crane cost for handling, maximum, add	0.4 ton	126.20	-	-	21.47	-	147.67 /ton	62
03-31-05.35	Concrete, ready mix, regular weight, elevated decks, 5000 psi	57.2 cy	-	113.00	-	-	-	113.00 /cy	6,466
03-31-05.70	Structural concrete, placing, elevated slab, with crane and bucket, over 10" thick, includes vibrating, excludes material	57.2 cy	37.09	-	-	9.53	-	46.61 /cy	2,667
03-35-29.30	Concrete finishing, floors, monolithic, screed finish	981.0 sf	0.32	-	-	-	-	0.32 /sf	317
03-39-13.50	Curing, sprayed membrane curing compound, elevated decks	9.8 csf	10.53	11.05	-	-	-	21.58 /csf	212
03-35-29.30	Concrete finishing, floor, dustproofing, solvent-based, 2 coats	981.0 sf	0.40	0.63	-	-	-	1.03 /sf	1,015
	Elevated Slabs - Elavation 95 18" Thick	**57.0 CYD**	**222.65**	**167.41**		**10.07**		**400.13 /CYD**	**22,807**
03350 Elevated Slabs - Elavation 123 - 8" Thick									
03-11-13.35	C.I.P. concrete forms, elevated slab, flat plate, plywood, to 15' high, 4 use, includes shoring, erecting, bracing, stripping and cleaning	1,140.0 sf	7.44	1.26	-	-	-	8.70 /sf	9,916

Phase	Estimate Breakdown	Quantity	Labor Cost/Unit	Material Cost/Unit	Sub Cost/Unit	Equip Cost/Unit	Other Cost/Unit	Total Cost/Unit	Total Net Amount
03350 Elevated Slabs - Elavation 123 - 8" Thick									
03-15-05.70	Shores, reshoring at elevated decks, allow	855.0 sf	1.04	0.58	-	-	-	1.62 /sf	1,387
03-21-10.60	Reinforcing steel, in place, elevated slabs, #4 to #7, A615, grade 60, incl labor for accessories, excl material for accessories	0.0 ton	849.00	1,000.00	-	-	-	1,849.00 /ton	48
03-23-05.50	Prestressing steel, ungrouted single strand, 100' elevated slab, 35 kip, post-tensioned in field	912.0 lb	1.68	0.63	-	0.02	-	2.33 /lb	2,125
03-21-10.60	Reinforcing in place, unloading & sorting, add to above - decks	0.5 ton	44.16	-	-	7.52	-	51.68 /ton	24
03-21-10.60	Reinforcing steel, crane cost for handling, maximum, add	0.5 ton	126.18	-	-	21.47	-	147.64 /ton	70
03-31-05.35	Concrete, ready mix, regular weight, elevated decks, 5000 psi	29.6 cy	-	113.00	-	-	-	113.00 /cy	3,340
03-31-05.70	Structural concrete, placing, elevated slab, with crane and bucket, 6" to 10" thick, includes vibrating, excludes material	29.6 cy	43.83	-	-	11.26	-	55.09 /cy	1,628
03-35-29.30	Concrete finishing, floors, monolithic, screed finish	1,140.0 sf	0.32	-	-	-	-	0.32 /sf	369
03-39-13.50	Curing, sprayed membrane curing compound, elevated decks	11.4 csf	10.53	11.05	-	-	-	21.58 /csf	246
03-35-29.30	Concrete finishing, floor, dustproofing, solvent-based, 2 coats	1,140.0 sf	0.40	0.63	-	-	-	1.03 /sf	1,179
	Elevated Slabs - Elavation 123 - 8" Thick	**30.6 CYD**	**432.31**	**219.16**		**11.93**		**663.41 /CYD**	**20,332**
04220 Exterior Masonry Walls - CMU 8" Thick With Pilasters									
04-22-10.28	Concrt block,high strngt,hollow,3500 psi,8"8"16",includs mortar and horzntl joint rnfrcng every other course,excluds scffldn,grout and verticl rnfrcng	2,574.0 sf	8.27	3.92	-	-	-	12.19 /sf	31,365
04-22-10.18	Concret block,col pilastr,2 piece unit,2000 psi,20"x20",includs mortar,verticl rnfrcng (4-#4 bars) and grout,excluds scffldn and horzntl reinforcing	112.0 vlf	52.86	26.00	-	-	-	78.86 /vlf	8,832
04-05-19.26	Masonry reinforcing bars, truss type steel joint reinforcing, mill standard galvanized, 12" wide	20.2 clf	32.49	26.00	-	-	-	58.49 /clf	1,179
04-05-19.26	Reinforcing, steel bars A615, placed horizontal, average #4 bar	875.2 lb	1.44	0.40	-	-	-	1.84 /lb	1,614
04-05-19.26	Masonry reinforcing bars, #3 and #4 reinforcing steel bars, placed vertically, ASTM A615	823.7 lb	1.86	0.48	-	-	-	2.34 /lb	1,925
04-05-16.30	Grout, for bond beams, lintels and concrete masonry unit (CMU) cores, C476, includes material only	566.3 cf	6.57	4.42	-	0.39	-	11.38 /cf	6,443

Phase	Estimate Breakdown	Quantity	Labor Cost/Unit	Material Cost/Unit	Sub Cost/Unit	Equip Cost/Unit	Other Cost/Unit	Total Cost/Unit	Total Net Amount
04220 Exterior Masonry Walls - CMU 8" Thick With Pilasters									
04-05-16.30	Grout, door frames, 3' x 7' opening, 2.5 CF per opening	1.0 opng	38.32	11.05	-	2.27	-	51.64 /opng	52
04-05-19.26	Allow - shoring and bracing at CMU walls (percentage wall area)	1,544.4 sfwa	1.04	0.18	-	-	-	1.22 /sfwa	1,888
04-05-23.13	Control joint, PVC, cross-shaped for CMU units	144.0 lf	2.32	0.92	-	-	-	3.24 /lf	467
05-12-23.40	Channel framing, structural steel, field fabricated, C6x8.2, incl cutting & welding	144.0 lf	36.09	6.30	-	2.71	-	45.10 /lf	6,494
06-11-10.24	Wood framing, miscellaneous, rough bucks, treated, for doors or windows, 2" x 8"	0.0 mbf	2,862.00	760.00	-	-	-	3,622.08 /mbf	87
07-71-26.10	Reglet, zinc and copper alloy, 20 ounce	144.0 lf	3.24	2.87	-	-	-	6.11 /lf	880
07-71-26.10	Reglet, counter flashing for zinc and copper alloy, 20 ounce, 12" wide	144.0 lf	6.04	5.25	-	-	-	11.29 /lf	1,625
07-19-19.10	Silicone water repellants, sprayed on CMU, 2 coat	5,148.0 sf	0.24	0.68	-	-	-	0.92 /sf	4,725
07-92-10.10	Caulking & Sealants, butyl based, bulk, in place, 77 LF per gallon, 1/2" x 1/2"	144.0 lf	2.36	0.45	-	-	-	2.81 /lf	405
	Exterior Masonry Walls - CMU 8" Thick With Pilasters	**2,574.0 SQFT**	**17.29**	**8.88**		**0.24**		**26.41 /SQFT**	**67,980**
05517 Metal Stairs									
05-51-19.50	Stair, shop fabricated, steel, 4'-0" W, incl pipe railing, stringers, grating treads w/ safety nosing, per riser	40.0 risr	88.05	430.00	-	4.96	-	523.00 /risr	20,920
	Metal Stairs	**40.0 RSR**	**88.05**	**430.00**		**4.96**		**523.00 /RSR**	**20,920**
05999 Hand Railing									
05-05-23.20	anchor 1/2" dia x 7" L, in concrete, brick or stone, excl layout & drilling	84.0 ea	5.84	1.70	-	-	-	7.54 /ea	633
03-82-16.10	Concrete impact drilling, for anchors, 4" d, 1/2" dia, in concrete or brick walls and floors, includes bit cost, layout and set up time, excl anchor	84.0 ea	14.60	0.06	-	-	-	14.66 /ea	1,231
05-52-13.50	Railing, pipe, aluminum, clear anodized, 2 rails, 3'-6" high, posts @ 5' O.C., 1-1/4" dia, shop fabricated With Toe plate	210.0 lf	16.51	44.00	-	0.93	-	61.44 /lf	12,902
	Hand Railing	**210.0 LFT**	**24.68**	**44.70**		**0.93**		**70.32 /LFT**	**14,766**
07500 Roofing - Membrane									
07-51-13.20	Built-up roofng systms,asphlt flood coat with grvl/s srfcng,coated&satrtd base sheet,4-plies #15 asphalt felt,mopped,excl insultn,flashng wood nailers	11.4 sq	219.80	130.00	-	26.39	-	376.19 /sq	4,289
07-57-13.10	Roof walkway, elastomeric, add	200.0 sf	3.41	0.89	-	1.36	-	5.66 /sf	1,131
07-71-26.10	Reglet, stainless steel, .020" thick	144.0 lf	3.24	3.75	-	-	-	6.99 /lf	1,007

REDWOOD CITY PUMP STATION

Phase	Estimate Breakdown	Quantity	Labor Cost/Unit	Material Cost/Unit	Sub Cost/Unit	Equip Cost/Unit	Other Cost/Unit	Total Cost/Unit	Total Net Amount
07500 Roofing - Membrane									
07-71-26.10	Reglet, counter flashing for stainless steel, .020" thick, 12 wide	144.0 lf	6.04	6.15	-	-	-	12.19 /lf	1,755
07-65-10.10	Flashing, galvanized steel, .018", 26 ga.	50.0 sf	6.24	0.65	-	-	-	6.89 /sf	345
07-72-33.10	Roof hatch, with curb, 1" fiberglass insulation, aluminum curb & cover, 2'-6" x 3'-0"	4.0 ea	281.11	1,025.00	-	-	-	1,306.11 /ea	5,224
07-72-36.20	Smoke vents, insulated, aluminum cover and frame, 4' x 4'	3.0 ea	216.24	2,050.00	-	-	-	2,266.24 /ea	6,799
07-72-80.30	Vents, one-way, for insulated decks, 1 per M.S.F., plastic, heavy duty	2.0 ea	35.62	38.00	-	-	-	73.62 /ea	147
	Roofing - Membrane	**1,140.0 SQFT**	**5.86**	**11.79**		**0.50**		**18.16 /SQFT**	**20,696**
08100 Screening Building - Doors									
08-13-13.15	Doors, fire, flush, "B" label, 90 minute, composite, 20 ga., 3'-0" x 6'-8"	2.0 ea	91.23	665.00	-	-	-	756.23 /ea	1,512
08-13-13.15	Doors, for vision lite, add	2.0 ea	-	156.00	-	-	-	156.00 /ea	312
08-13-13.15	Add for baked enamel finish, average cost per leaf	2.0 leaf	12.87	50.40	-	-	-	63.27 /leaf	127
08-13-13.15	Metal doors, rated, receive, sort and spread, per manhour	2.0 mh	62.54	-	-	-	-	62.54 /mh	125
08-36-13.10	Doors, overhead, commercial, stock, steel, heavy duty, sectional, manual, 24 gauge, 12' x 12' high	1.0 ea	973.12	1,350.00	-	-	-	2,323.12 /ea	2,323
08-36-13.10	Doors, overhead, commercial, stock, steel, heavy duty, sectional, for electric trolley operator, 1/3 HP, to 12' x 12', add	1.0 ea	364.92	950.00	-	-	-	1,314.92 /ea	1,315
	Screening Building - Doors	**1.0 LSUM**	**1,671.31**	**4,042.80**				**5,714.11 /LSUM**	**5,714**
14999 Overhead Bridge Crane									
41-22-13.13	Overhead bridge crane, under hung hoist, electric operating, 2 girder, 15 ton, 40' span	1.0 ea	8,547.12	80,000.00	-	448.17	-	88,995.29 /ea	88,995
41-22-13.10	Crane Rails, running track only, 104 lb per yard, excl. equipment	10,400.0 lb	0.47	0.66	-	0.03	-	1.16 /lb	12,042
	Overhead Bridge Crane	**1.0 Each**	**13,448.79**	**86,864.00**		**724.73**		**101,037.52 /Each**	**101,038**
23999 Foul Air Fans and Damper									
23-34-00.00	Fans, axial flow, compact, lo sound, 2.5" S.P., 6,400 CFM, 5 HP	2.0 ea	771.37	4,375.00	-		-	5,146.37 /ea	10,293
22-20-00.45	24" FRP Dampers, volume control	2.0 ea	114.46	760.00	-	-	-	874.46 /ea	1,749
22-20-00.45	42" FRP Dampers, volume control	2.0 ea	305.25	1,200.00	-	-	-	1,505.25 /ea	3,010
	Foul Air Fans and Damper	**1.0 Each**	**2,382.14**	**12,670.00**				**15,052.14 /Each**	**15,052**
23999 FRP Foul Air Ducting									
22-20-00.45	Duct, FRP, 24" dia.	160.0 lnft	171.68	59.00	-	-	-	230.68 /lnft	36,909
22-20-00.45	Fitting, FRP, Tee , 24" dia.	4.0 ea	457.81	471.00	-	-	-	928.81 /ea	3,715
22-20-00.45	Fitting, FRP, 90 Elbow, 24" dia.	5.0 ea	755.39	295.00	-	-	-	1,050.39 /ea	5,252

REDWOOD CITY PUMP STATION

Phase	Estimate Breakdown	Quantity	Labor Cost/Unit	Material Cost/Unit	Sub Cost/Unit	Equip Cost/Unit	Other Cost/Unit	Total Cost/Unit	Total Net Amount
23999 FRP Foul Air Ducting									
22-20-00.45	Duct, FRP, 42" dia.	145.0 lnft	251.80	106.00	-	-	-	357.80 /lnft	51,881
22-20-00.45	Fitting, FRP, Tee , 42" dia.	2.0 ea	915.63	1,883.00	-	-	-	2,798.63 /ea	5,597
22-20-00.45	Fitting, FRP, 90 Elbow, 42" dia.	8.0 ea	686.72	1,177.00	-	-	-	1,863.72 /ea	14,910
22-20-00.45	Fitting, FRP, Weld, 42" dia.	22.0 ea	727.01	118.00	-	-	-	845.01 /ea	18,590
22-20-00.45	Fitting, FRP, Weld, 24" dia.	20.0 ea	364.27	59.00	-	-	-	423.27 /ea	8,465
22-20-00.45	Fitting, FRP, Flange, 24" dia.	1.0 ea	228.91	189.00	-	-	-	417.91 /ea	418
22-20-00.45	Fitting, FRP, Flange, 42" dia.	1.0 ea	457.81	442.00	-	-	-	899.81 /ea	900
22-20-00.45	Fitting, FRP, Reducer 42" dia.	1.0 ea	915.62	2,353.00	-	-	-	3,268.62 /ea	3,269
	FRP Foul Air Ducting	**305.0 LFT**	**333.75**	**157.74**				**491.49 /LFT**	**149,905**
23999 HVAC Allowance									
23-99-99.99	HVAC Allowance	3,840.0 SQFT	-	-	20.00	-	-	20.00 /SQFT	76,800
	HVAC Allowance	**3,840.0 SQFT**			**20.00**			**20.00 /SQFT**	**76,800**
26999 EI&C Allowance - Building Electrical and Lighting									
26-00-00.02	Electrical and Instrumentation Subcontract - Allowance	1.0 ls			100,000.00	-	-	100,000.00 /ls	100,000
	EI&C Allowance - Building Electrical and Lighting	**1.0 LS**			**100,000.00**			**100,000.00 /LS**	**100,000**
31250 Shoring Systems - Sheet Pile									
31-41-16.10	Sheet piling, steel, 38 psf, 25' excavation, per S.F., drive, extract and salvage, excludes wales	5,400.0 sf	15.42	10.15	-	6.90	-	32.47 /sf	175,355
31-41-16.10	Sheet piling, wales, connections and struts, 2/3 salvage	14.4 ton	-	480.00	-	-	-	480.00 /ton	6,912
	Shoring Systems - Sheet Pile	**5,400.0 SQFT**	**15.42**	**11.43**		**6.90**		**33.75 /SQFT**	**182,267**
31315 Excavation and Backfill									
31-23-16.42	Excavating, bulk bank measure, 3 C.Y. capacity = 250 C.Y./hour, shovel, excluding truck loading	1,925.0 bcy	0.61	-	-	0.80	-	1.41 /bcy	2,706
31-23-23.18	Hauling, excavated or borrow material, loose cubic yards, 5 mile round trip, 1 load/hour, 16.5 C.Y. dump trailer, highway haulers, excludes loading	2,550.0 lcy	5.03	-	-	6.86	-	11.89 /lcy	30,314
31-23-23.16	Bedding, crushed stone 3/4" to 1/2"	722.0 lcy	10.83	23.50	-	2.48	-	36.80 /lcy	26,571
31-23-23.13	Backfill, trench, 6" to 12" lifts, dozer backfilling, compaction with vibrating roller	692.0 ecy	1.32	-	-	2.60	-	3.91 /ecy	2,709
	Excavation and Backfill	**2,550.0 CYD**	**8.91**	**6.65**		**8.87**		**24.43 /CYD**	**62,300**
46076 Bar Screens, Compactors and Climbers and Sprayers									
46-06-00.00	Bar screen, mechanical, inclined, complete w/ motor,sprays,chute	2.0 ea	16,966.00	250,000.00	-	2,500.00	-	269,466.00 /ea	538,932

Project Number: 142399
Estimate Issue: 3
Due Date: 5/5/2016
Estimator: Ian Kruljac

REDWOOD CITY PUMP STATION

Phase	Estimate Breakdown	Quantity	Labor Cost/Unit	Material Cost/Unit	Sub Cost/Unit	Equip Cost/Unit	Other Cost/Unit	Total Cost/Unit	Total Net Amount
46076 Bar Screens, Compactors and Climbers and Sprayers									
05-58-09.50	Bar screen housing, full height door, lockable, alum frame,alum siding	2.0 ea	33.03	1,591.59	-	-	-	1,624.62 /ea	3,249
05-58-09.50	Bar screen Manual Operation	1.0 ea	2,064.00	25,000.00	-	-	-	27,064.00 /ea	27,064
	Bar Screens, Compactors and Climbers and Sprayers	**2.0 Each**	**18,031.03**	**264,091.59**		**2,500.00**		**284,622.61 /Each**	**569,245**
46999 Channel Inlet and Outlet Gates									
46-06-10.00	Sluice gate, HD, self cont,motor operated &w/crank, 60" x 60"	6.0 ea	9,009.50	40,000.00	-	2,037.98	-	51,047.47 /ea	306,285
	Channel Inlet and Outlet Gates	**6.0 Each**	**9,009.50**	**40,000.00**		**2,037.98**		**51,047.47 /Each**	**306,285**
	03 REDWOOD SCREENING BUILDING	**1.0 LSUM**	**570,741.77**	**1,169,458.35**	**176,800.00**	**84,417.77**		**2,001,417.89 /LSUM**	**2,001,418**

Phase	Estimate Breakdown	Quantity	Labor Cost/Unit	Material Cost/Unit	Sub Cost/Unit	Equip Cost/Unit	Other Cost/Unit	Total Cost/Unit	Total Net Amount
04 REDWOOD SURGE CONTROL									
03330 Slabs Surge Controll Base Slab - SOG									
31-23-16.16	Strt excvtn for minor strtrs,bank measur,for spread and mat footngs,elevatr pits,and small buildng fndtns,3/4 cy bucket,machine excavtn,hydrlc backhoe	17.8 bcy	13.54	-	-	7.42	-	20.96 /bcy	373
31-23-23.18	Hauling, excavated or borrow material, loose cubic yards, 1 mile round trip, 2.2 loads/hour, 12 C.Y. truck, highway haulers, excludes loading	17.8 lcy	3.02	-	-	3.92	-	6.93 /lcy	123
31-22-16.10	Fine grading, fine grade for slab on grade, machine	98.2 sy	1.13	-	-	0.72	-	1.85 /sy	181
03-15-13.50	Waterstop, PVC, ribbed type, split, 3/8" thick x 6" wide	120.0 lf	5.61	4.38	-	-	-	9.99 /lf	1,199
03-15-13.50	Waterstop, fittings, rubber, flat, dumbbell or center bulb, field union, 3/8" thick x 9" wide	10.0 ea	14.60	47.50	-	-	-	62.10 /ea	621
03-21-10.60	Reinforcing steel, in place, slab on grade, #3 to #7, A615, grade 60, incl labor for accessories, excl material for accessories	0.7 ton	1,070.05	1,000.00	-	-	-	2,070.05 /ton	1,372
03-21-10.60	Reinforcing, a615 60, sog, thickened edge, allow 28 lbs/cy, #3 to #7	0.2 ton	1,070.04	970.00	-	-	-	2,040.04 /ton	508
03-21-10.60	Reinforcing in place, unloading & sorting, add to above - slabs	0.9 ton	44.17	-	-	7.51	-	51.68 /ton	47
03-21-10.60	Reinforcing in place, crane cost for handling, add to above, slabs	0.9 ton	48.00	-	-	8.17	-	56.17 /ton	51
03-31-05.35	Concrete, ready mix, regular weight, slabs/mats, 4000 psi	70.2 cy	-	107.00	-	-	-	107.00 /cy	7,515
03-31-05.70	Structural concrete, placing, slab on grade, pumped, over 6" thick, includes vibrating, excludes material	70.2 cy	22.78	-	-	4.31	-	27.10 /cy	1,903
03-35-29.30	Concrete finishing, floors, monolithic, screed and bull float(darby) finish	884.0 sf	0.39	-	-	-	-	0.39 /sf	343
03-39-13.50	Curing, sprayed membrane curing compound	8.8 csf	10.53	11.05	-	-	-	21.58 /csf	191
03-35-29.30	Concrete finishing, floor, dustproofing, solvent-based, 1 coat	884.0 sf	0.28	0.18	-	-	-	0.46 /sf	404
	Slabs Surge Controll Base Slab - SOG	**70.0 CYD**	**65.22**	**138.24**		**8.42**		**211.89 /CYD**	**14,832**
40120 Surge Tanks Above Ground Piping Supports and Valves									
40-05-19.20	Pipe Plain End-Ductile Iron--C-151 4 Inch (100mm)	36.2 lf	-	32.66	-	-	-	32.66 /lf	1,183
40-05-19.20	Pipe Plain End-Ductile Iron--C-151 30 Inch (750mm)	76.7 lf	-	242.00	-	-	-	242.00 /lf	18,554
40-05-19.20	Fitting Flanged & Bolted-Ductile Iron-Ell90-Cls 150 4 Inch (100mm)	8.0 ea	-	273.00	-	-	-	273.00 /ea	2,184

Phase	Estimate Breakdown	Quantity	Labor Cost/Unit	Material Cost/Unit	Sub Cost/Unit	Equip Cost/Unit	Other Cost/Unit	Total Cost/Unit	Total Net Amount
40120 Surge Tanks Above Ground Piping Supports and Valves									
40-05-19.20	Fitting Flanged & Bolted-Ductile Iron-Ell90-Non-Specific 30 Inch (750mm)	4.0 ea	-	8,189.00	-	-	-	8,189.00 /ea	32,756
40-05-19.20	Fitting Flanged & Bolted-Ductile Iron-Tee-Non-Specific 30 Inch (750mm)	2.0 ea	-	16,680.78	-	-	-	16,680.78 /ea	33,362
40-05-19.10	Fitting Flanged & Bolted-Cast Iron-Flange Thr-Cls 125 4 Inch (100mm)	14.0 ea	-	20.88	-	-	-	20.88 /ea	292
40-05-19.10	Fitting Flanged & Bolted-Cast Iron-Flange Thr-Non-Specific 30 Inch (750mm)	17.0 ea	-	1,626.30	-	-	-	1,626.30 /ea	27,647
40-05-05.00	Pipe Erection-Handle Fittings-Metal-Std 4 Inch (100mm)	8.0 ea	49.31	-	-	-	-	49.31 /ea	394
40-05-05.00	Pipe Erection-Handle Fittings-Metal-Std 30 Inch (750mm)	6.0 ea	287.63	-	-	-	-	287.63 /ea	1,726
40-46-16.00	Coatings Shop-Misc-Non-Specific 4 Inch (100mm)	44.0 lf	-	2.49	-	-	-	2.49 /lf	110
40-46-16.00	Coatings Shop-Misc-Non-Specific 30 Inch (750mm)	115.0 lf	-	18.65	-	-	-	18.65 /lf	2,145
40-05-65.23	Valve Flanged & Bolted-Cast Steel-Check-Cls 150 (PN20) 4 Inch (100mm)	2.0 ea	-	1,381.04	-	-	-	1,381.04 /ea	2,762
40-05-65.23	Valve Flanged & Bolted-Cast Steel-Check-Cls 150 (PN20) 30 Inch (750mm)	2.0 ea	-	63,804.04	-	-	-	63,804.04 /ea	127,608
40-05-61.00	Valve Flanged & Bolted-Cast Steel-Gate-Cls 150 (PN20) 4 Inch (100mm)	2.0 ea	-	611.95	-	-	-	611.95 /ea	1,224
40-05-51.00	Pipe Erection-Handle Valves-Metal-Cls 150 (PN20) 4 Inch (100mm)	4.0 ea	118.34	-	-	-	-	118.34 /ea	473
40-05-51.00	Pipe Erection-Handle Valves-Metal-Cls 150 (PN20) 30 Inch (750mm)	2.0 ea	807.34	-	-	-	-	807.34 /ea	1,615
40-05-19.10	Shop Fabrication-Cast Iron-Shop Cut & Thread & Attach Flange-Class C 4 Inch (100mm)	14.0 ea	-	15.61	-	-	-	15.61 /ea	218
40-05-19.10	Shop Fabrication-Cast Iron-Shop Cut & Thread & Attach Flange-Class C 30 Inch (750mm)	17.0 ea	-	143.65	-	-	-	143.65 /ea	2,442
40-05-19.20	Pipe Erection-Straight Run-Ductile Iron-Non-Specific 4 Inch (100mm)	44.0 lf	28.60	-	-	-	-	28.60 /lf	1,258
40-05-19.20	Pipe Erection-Straight Run-Ductile Iron-Non-Specific 30 Inch (750mm)	115.0 lf	165.67	-	-	-	-	165.67 /lf	19,053
40-05-05.00	Make Up Bolted Joint incl B-7 Nuts, Bolts, 1/16 Inch Rubber Gasket-Cls 150 (PN20) 4 Inch (100mm)	8.0 ea	43.83	26.60	-	-	-	70.43 /ea	563
40-05-05.00	Make Up Bolted Joint incl B-7 Nuts, Bolts, 1/16 Inch Rubber Gasket-Cls 150 (PN20) 30 Inch (750mm)	9.0 ea	219.15	904.78	-	-	-	1,123.92 /ea	10,115
40-05-07.00	Pipe Support 4 Inch (100mm)	8.0 ea	109.57	15.00	-	-	-	124.57 /ea	997

REDWOOD CITY PUMP STATION

Phase	Estimate Breakdown	Quantity	Labor Cost/Unit	Material Cost/Unit	Sub Cost/Unit	Equip Cost/Unit	Other Cost/Unit	Total Cost/Unit	Total Net Amount
40120 Surge Tanks Above Ground Piping Supports and Valves									
40-05-07.00	Pipe Support 30 Inch (750mm)	4.0 ea	197.23	100.00	-	-	-	297.23 /ea	1,189
40-05-07.00	Hilti-Chemical Anchor - Pipe Support Size 4 Inch (100mm)	32.0 ea	21.92	20.00	-	-	-	41.92 /ea	1,341
40-05-07.00	Hilti-Chemical Anchor - Pipe Support Size 30 Inch (750mm)	16.0 ea	54.79	65.00	-	-	-	119.79 /ea	1,917
40-46-16.00	FBEpoxy Coating 40 mil-Factory-4 Inch (100mm)	44.0 lf	-	2.11	-	-	-	2.11 /lf	93
40-46-16.00	FBEpoxy Coating 40 mil-Factory-30 Inch (750mm)	115.0 lf	-	17.59	-	-	-	17.59 /lf	2,023
40-05-05.00	Field Testing-Hydrotest-Non-Specific 4 Inch (100mm)	44.0 lf	3.07	-	-	-	-	3.07 /lf	135
40-05-05.00	Field Testing-Hydrotest-Non-Specific 30 Inch (750mm)	115.0 lf	89.85	-	-	-	-	89.85 /lf	10,333
	Surge Tanks Above Ground Piping Supports and Valves	**159.0 LFT**	**255.05**	**1,667.66**				**1,922.71 /LFT**	**305,711**
46999 Surge Tanks and Pumps									
23-13-23.16	Storage tank, horizontal, steel, above ground, single wall, 50,000 gallon, incl. cradles, coating & fittings, excl. foundation, pumps or piping	2.0 ea	3,217.84	81,500.00	-	-	-	84,717.84 /ea	169,436
05-58-09.50	Pump mounting base plate, complete w/ anchor bolts, 4 sf	2.0 ea	848.30	795.79	-	-	-	1,644.09 /ea	3,288
05-05-23.05	Anchor bolt, L-type, 4-bolt set, plain steel, 1-1/2" dia x 36" L, incl nut & washer, job-built 4-hole template	4.0 set	66.35	148.00	-	-	-	214.35 /set	857
23-21-23.13	Pump, circulating, end suction, flanged joints, 5 H.P. 3" size Surge Pumps	2.0 ea	945.36	3,425.00	-	-	-	4,370.36 /ea	8,741
	Surge Tanks and Pumps	**2.0 EACH**	**5,144.20**	**86,016.79**				**91,160.99 /EACH**	**182,322**
	04 REDWOOD SURGE CONTROL	**1.0 LSUM**	**55,406.94**	**446,867.78**		**589.71**		**502,864.43 /LSUM**	**502,864**

REDWOOD CITY PUMP STATION

Phase	Estimate Breakdown	Quantity	Labor Cost/Unit	Material Cost/Unit	Sub Cost/Unit	Equip Cost/Unit	Other Cost/Unit	Total Cost/Unit	Total Net Amount
05 REDWOOD MPPS CONNECTION									
02228 Selective Demolition - Flow Meter and Vault									
11-05-05.10	Vault, selective demolition	1.0 ea	625.38	-	-	750.00	-	1,375.38 /ea	1,375
22-05-05.10	Flow Meter - Seletive demolition	1.0 ea	1,090.53	-	-	-	-	1,090.53 /ea	1,091
	Selective Demolition - Flow Meter and Vault							**/sf**	**2,466**
31250 Shoring Systems - Sheet Pile									
31-41-16.10	Sheet piling, steel, 27 psf, 20' excavation, per S.F., drive, extract and salvage, excludes wales	4,800.0 sf	17.58	7.45	-	7.87	-	32.90 /sf	157,941
31-41-16.10	Sheet piling, wales, connections and struts, 2/3 salvage	5.0 ton	-	480.00	-	-	-	480.00 /ton	2,400
	Shoring Systems - Sheet Pile	**4,800.0 SQFT**	**17.58**	**7.95**		**7.87**		**33.40 /SQFT**	**160,341**
31315 Excavation and Backfill									
31-23-16.42	Excavating, bulk bank measure, 3 C.Y. capacity = 250 C.Y./hour, shovel, excluding truck loading	666.0 bcy	0.31	-	-	0.40	-	0.70 /bcy	468
31-23-23.18	Hauling, excavated or borrow material, loose cubic yards, 5 mile round trip, 1 load/hour, 16.5 C.Y. dump trailer, highway haulers, excludes loading	952.0 lcy	2.51	-	-	6.86	-	9.38 /lcy	8,925
31-23-23.16	Bedding, crushed stone 3/4" to 1/2"	336.0 lcy	5.41	23.50	-	2.48	-	31.39 /lcy	10,547
31-23-23.13	Backfill, trench, 6" to 12" lifts, dozer backfilling, compaction with vibrating roller	286.0 ecy	0.66	-	-	2.60	-	3.26 /ecy	931
	Excavation and Backfill	**333.0 CYD**	**13.82**	**23.71**		**25.14**		**62.68 /CYD**	**20,871**
33999 MPPS Tie in Allowance									
22-05-00.10	Allowance - Piping, Process MPPS Tie In	1.0 ls	7,500.00	10,000.00		2,500.00	-	20,000.00 /ls	20,000
	MPPS Tie in Allowance	**1.0 LS**	**7,500.00**	**10,000.00**		**2,500.00**		**20,000.00 /LS**	**20,000**
	05 REDWOOD MPPS CONNECTION	**1.0 LSUM**	**98,214.81**	**56,056.00**		**49,407.39**		**203,678.20 /LSUM**	**203,678**

REDWOOD CITY PUMP STATION

Phase	Estimate Breakdown	Quantity	Labor Cost/Unit	Material Cost/Unit	Sub Cost/Unit	Equip Cost/Unit	Other Cost/Unit	Total Cost/Unit	Total Net Amount
06 REDWOOD ODOR/CHEM SYSTEM CONTROL ALLOWANCE									
44411 ODOR CONTROL AND CHEM SYSTEM									
22-05-00.10	Allowance - ODOR CONTROL SYSTEM FANS	1.0 ls	40,000.00	150,000.00		10,000.00	-	200,000.00 /ls	200,000
22-20-00.31	Allowance - CHEM SYSTEMS	1.0 ls	840,000.00	150,000.00	-	72,000.00	-	1,062,000.00 /ls	1,062,000
	ODOR CONTROL AND CHEM SYSTEM	**1.0 LSUM**	**880,000.00**	**300,000.00**		**82,000.00**		**1,262,000.00 /LSUM**	**1,262,000**
	06 REDWOOD ODOR/CHEM SYSTEM CONTROL ALLOWANCE	**1.0 LSUM**	**880,000.00**	**300,000.00**		**82,000.00**		**1,262,000.00 /LSUM**	**1,262,000**

REDWOOD CITY PUMP STATION

Phase	Estimate Breakdown	Quantity	Labor Cost/Unit	Material Cost/Unit	Sub Cost/Unit	Equip Cost/Unit	Other Cost/Unit	Total Cost/Unit	Total Net Amount
07 REDWOOD ELECTRICAL AND INSTRUMENTATION									
26999 EI&C Allowance									
26-00-00.02	Electrical and Instrumentation Subcontract - Allowance	1.0 ls			3,750,000.00	-	-	3,750,000.00 /ls	3,750,000
	EI&C Allowance	**1.0 LSUM**			**3,750,000.00**			**3,750,000.00 /LSUM**	**3,750,000**
	07 REDWOOD ELECTRICAL AND INSTRUMENTATION	**1.0 LSUM**			**3,750,000.00**			**3,750,000.00 /LSUM**	**3,750,000**
	01 SVCW REDWOOD CITY PUMP STATION								**14,185,775**

Estimate Totals

Description	Rate	Hours	Amount	Totals
Labor		25,949 hrs	3,241,226	
Material			5,234,491	
Subcontract			5,202,836	
Equipment		9,041 hrs	507,223	
			14,185,776	**14,185,776**
Labor Mark-up	15.000 %		486.184	
Material Mark-up	10.000 %		523.449	
Subcontractor Mark-up	10.000 %		520.284	
Construction Equipment Mark-up	10.000 %		50.722	
			1,580,639	**15,766,415**
Material Shipping & Handling	2.000 %		104,690	
Material Sales Tax	9.000 %		518,215	
Net Markups			**622,905**	**16,389,320**
Contractor General Conditions	12.000 %		1,966,718	
			1,966,718	**18,356,038**
Start-Up, Training, O&M	2.000 %		367,121	
			367,121	**18,723,159**
Contractor Bonds & Insurance	2.000 %		374,463	
			374,463	**19,097,622**
Bldg Risk, Liability Auto Ins	1.000 %		190,976	
			190,976	**19,288,598**
CGL Insurance	1.500 %		289,329	
Gross Markups			**289,329**	**19,577,927**
Total				**19,577,927**

Appendix H: RCPS LCC Analysis

Brown and Caldwell, August 31, 2016

This page intentionally left blank.

201 N. Civic Drive, Suite 115
Walnut Creek, CA 94596-3864

T: 925.937.9010
F: 925.937.9026

August 31, 2016

Mr. Bob Donaldson
Collaborative Strategies Consulting, Inc.
2785 Canyon Creek Drive
San Ramon CA 94583

Project No. 146228

Subject: Redwood City Pump Station Life Cycle Analysis

Dear Mr. Donaldson:

This letter summarizes the assumptions and sources of information for the cost components incorporated into the Redwood City Pump Station (RCPS) Life Cycle Cost (LCC) analysis model. The major considerations in developing the RCPS LCC include capital cost, annual operation and maintenance (O&M) running costs, replacement/rehabilitation costs and overall project schedule.

Construction Costs. At the location of the existing RCPS, a new pump station will be built to pump the wastewater flow from Redwood City into the SVCW Conveyance System. The current pump station building will be repurposed to house odor control, standby generator and electrical/control facilities. A new pump station facility will be constructed adjacent and to the west of the existing RCPS building and will include two new trench-style wet wells that will contain two submersible dry weather and two submersible wet weather pumps each for a total of eight pumps. In addition, a new screenings building will be built to the north of the new pump station wet well that includes coarse screens to remove large solids, rags and debris from the Redwood City flows.

Construction costs were calculated by Brown and Caldwell. The construction costs were converted into capital costs by applying soft costs, project contingencies, and market fluctuations to each individual cost component.

The construction contingencies, soft costs, and market fluctuations are summarized in Table 1. Market fluctuations are applied to capture the range of costs that could potentially occur over the construction period for the entire conveyance system program upgrade.

Table 1. Capital Cost Factors	
Cost Factor	**Markup**
Construction Contingency[1]	**25%**
Soft Costs[2]	
Construction Management, Engineering Services During Construction, Testing, Inspection	18%
Contract Change Orders (CCO)	5%
Planning	5%
Design	10%
Project Management	5%
Soft Cost Subtotal	**43%**
Market Fluctuations[3]	
Low	-5%
High	15%

Notes:

[1,2]Construction contingency and soft costs developed by SVCW as presented in the comparison of construction cost estimates during the June 2, 2016 Department Head Meeting.

[3]Market fluctuations developed by SVCW. Source: SVCW Conveyance System Construction Cost Analysis, Front of Plant, Revision Date: April 22, 2015, Revision 28b.

O&M Costs. Annual maintenance allowance is equal to one full time employee at $150,000/year per SVCW's direction during the original LCC analysis completed in May 2015 (includes odor control, screen, standby generator and combination air vacuum/relief valves/surge control and pump inspection). Odor control costs are included in this analysis and include costs for chemical and water to operate the system on an annual basis at an estimated cost of $95,000/year due to the size of the facility. Pump inspection (pull all submersible pumps) – once every six months; $33,600/year based on $4,200/pump/year in Table 7.19 of Conveyance System Master Plan (Winzler and Kelly, 2011). Electrical costs are calculated using the location of the facility and the electrical rates, along with calculated equipment power usage. The electrical rate is $0.150 KWh based on current SVCW electrical bills for RCPS. The total RCPS annual equipment power usage is 655,978kW (74.6 kWh).

Rehabilitation/ Replacement Costs. The following rehabilitation and replacement assumptions were made for RCPS:

1. Dry weather submersible pump rebuild is once every 5 years at 50 percent of a purchase cost of $875,000 for all four dry weather pumps based on vendor supplied costs.
2. Wet weather submersible pump rebuild – once every 10 years at 50 percent of a purchase cost of $1,472,000 for all wet dry weather pumps based on vendor supplied costs.

3. RCPS Screen Replacement – once every 20 years at a cost of $819,000.
4. Pump replacement – once every 25 years for both dry and wet weather pumps. The cost to replace is assumed to be purchase cost of $2,347,000 for all eight pumps. No rebuild costs are assumed within these years.
5. Electrical equipment will be replaced once every 25 years and instrumentation and control once every 15 years. Electrical equipment replacement cost is assumed to be $4,471,000 and the instrumentation and control equipment replacement cost is assumed to be $496,800.
6. Structural rehabilitation or replacement will occur once every 50 years for RCPS since it will be a new station and the existing building will be repurposed for ancillary equipment. Since this cost will occur outside of the period of analysis, it was not calculated for this LCC. The structural rehabilitation/replacement includes piping, valves, HVAC, and odor control.

Schedule. The RCPS project construction is expected to begin in November 2020 and end in November 2022. Capital costs are applied in the LCC model at the midpoint year of construction. The Year 2021 is used as the midpoint year of construction. The end year of construction is used to establish the start of recurring O&M and rehabilitation/replacement costs. The Year of Analysis for the entire conveyance system program is the Year of Beneficial Use. The Year of Beneficial Use is the year major facilities of the conveyance system (i.e., Tunnel, Receiving Lift Station and Headworks) start up. Based on the current program-wide schedule (Version 13 dated June 23, 2016) developed by SVCW, the Year of Beneficial Use is the Year 2022.

Escalation and Discount Rates. To determine the present value of costs for the Year of Analysis, their values are escalated to future values and discounted back to the Year of Analysis. The discount and escalation rates used in the RCPS LCC Analysis are developed by SVCW based on current and projected investment return rates as summarized in Table 3.

Table 3. Escalation and Discount Rates

Factor	Rate
Escalation	4%
Capital Project and Rehabilitation/Replacement Discount	7%
O&M Discount	3%

The LCC analysis summarizes all cost components over a 50-Year period ending in the Year 2066. The calculation for determining the RCPS LCC is located in Attachment A. The total 50-year LCC for RCPS is $63.7 million with a range of $62.5 to $67.3 million accounting for market fluctuations.

Very truly yours,

Brown and Caldwell

Charlie Joyce, Project Manager
Walnut Creek, CA

cc: Kim Hackett, SVCW
Roanne Ross, Whitley Burchett & Associates

Attachments (1)

- Attachment A: Redwood City Pump Station LCC Calculation

Attachment A: SVCW Life Cycle Cost (LCC) Redwood City PS Calculation

A. Purpose: This sheet provides the Redwood City Pump Station LCC calculation for a 50-year analysis period. The equations used below are further explained in TM 11-3: Life Cycle Cost Analysis Guidelines.

B. Step 1: Conversion from Construction Cost to Capital Cost: The following equation is used to convert the construction cost developed by each team into a capital cost. Contingency, soft cost and market fluctuation cost factors are displayed below.

Capital Cost = Construction Cost x [1 + Project Contingency + Σ(Soft Costs) + Market Fluctuations]

1. Project Contingency (all projects except Gravity Pipeline), Cont: $Cont := 25\%$

2. Soft Costs, SC:

- Construction Management and Engineering Services: $SC_{CM} := 18\%$
- Conract Change Orders: $SC_{CCO} := 5\%$
- Planning: $SC_{Plan} := 5\%$
- Design: $SC_{Design} := 10\%$
- Project Management $SC_{PM} := 5\%$

3. Market Fluctuation, MF:
Curently set by SVCW

$MF_{low} := -5\%$

$MF_{base} := 0\%$

$MF_{high} := 15\%$

4. Capital Cost, CC: For the Redwood City PS replacement, the construction cost is $19,578,000 (2016 dollars) and occurs in the midyear of construction.

Display Unit of Dollars: $dollars := 1$

$Cost_{Construction} := 19578000 dollars$ *Note: From Redwood City Pump Station Conceptual Level Class 3 Estimate, May 2016, prepared by BC.*

$$Cost_{Capital\_low} := Cost_{Construction} \cdot \left(1 + Cont + SC_{CM} + SC_{CCO} + SC_{Plan} + SC_{Design} + SC_{PM} + MF_{low}\right) = 31.91 \times 10^{6} \cdot dollars$$

$$Cost_{Capital\_base} := Cost_{Construction} \cdot \left(1 + Cont + SC_{CM} + SC_{CCO} + SC_{Plan} + SC_{Design} + SC_{PM} + MF_{base}\right) = 32.89 \times 10^{6} \cdot dollars$$

$$Cost_{Capital\_high} := Cost_{Construction} \cdot \left(1 + Cont + SC_{CM} + SC_{CCO} + SC_{Plan} + SC_{Design} + SC_{PM} + MF_{high}\right) = 35.83 \times 10^{6} \cdot dollars$$

$Y_{capital}$ = Midpoint Year of Construction $Y_{capital} := 2021$

C. Step 2: Calculate Operation and Maintenance (O&M) Costs: The following O&M assumptions are made for the Redwood City PS:

1. Annual general maintenance allowance is 1.0 FTE at $150K/year/employee per SVCW's direction during the original LCC analysis completed in May 2015 (includes odor control, screens, cranes, standby generator and surge control)

2. Pump inspection (pull all submersible pumps) occurs once every six months; $33,600/year based on $4,200/pump/year.

3. Annual odor control costs are based on pump station predesign planning chemical scrubber costs for each pump station (includes costs for chemical, water, and electrical). Estimated cost is $95,000/year.

4. Electrical costs are calculated from total pump station annual power requirements and electrical rates based on current SVCW electrical bills.

- End of Construction, $Y_{EndConst}$: $Y_{EndConst} := 2022$
- End of Analysis, $Y_{Analysis}$: $Y_{Analysis} := 2066$

1. General Maintenance Allowance

- Annual general maintenance allowance, $Cost_{Annual\_OM}$
- General maintenance occurs annually from the end of construction to end of LCC analysis (2022-2066)
- General Maintenance Cost as follows:

$$Cost_{Annual\_OM} := 150000 \cdot dollars$$

2. Pump Inspection

- Annual pump inspection cost of 8 pumps, $Cost._{Annual\_Pump}$
- Pump inspection occurs bi-annually from the end of construction to end of LCC analysis (2022-2066)
- Annual cost is as follows:

$$Cost_{Annual\_Pump} := 33600 \cdot dollars$$

3. Odor Control

- Estimated cost based on PS predesign planning chemical scrubber, $Cost_{Annual\_Odor}$
- Cost occurs annually from the end of construction to the end of LCC Analysis (2022-2066)
- Annual costs are as follows:

$$Cost_{Annual\_Odor} := 95000 \cdot dollars$$

4. Electrical

- Estimated pump station power required (based on equipment load) kWh, Power
- Electrical rate for RCPS ($/KWh), Rate
- Estimated hourly electrical costs, $Cost_{Hourly}$
- Electrical costs occur annually from end of construction to end of LCC analysis (2022 to 2066):

$kWh := 1$

$hour := 1$

$days := 1$

$year := 1$

$Power := 74.9kWh$

$Rate := 0.150 \cdot \frac{dollars}{kWh}$

$Cost_{Annual\_Elec} := Power \cdot Rate \cdot 24 \frac{hour}{days} \cdot 365 \frac{days}{year} = 98.42 \times 10^{3} \cdot dollars$

D. Step 3: Calculate Rehabilitation and Replacement Costs: The following R&R assumptions are made for the Redwood City PS:

1. The dry weather submersible pumps are assumed to be rebuilt once every 5 years; cost is assumed to be 50% of purchase cost from the May 2016 cost estimate.

2. The wet weather submersible pumps are assumed to be rebuilt once every 10 years; cost is assumed to be 50% of purchase cost from the May 2016 cost estimate.

3. RCPS Screen Replacement occurs once every 20 years.

4. All pumps will be replaced once every 25 years; cost is assumed to be 50% of purchase cost from the May 2016 cost estimate. Cost will be purchase cost from May 2016 cost estimate with no rebuild cost in that year.

5. Electrical equipment replacement occurs once every 25 years and Instrumentation and Control equipment will be replaced once every 15 years, cost is assumed to be the construction cost from the May 2016 cost estimate.

6. Structural Rehabilitation or Replacement occurs once every 50 years since it will be a new pump station; therefore, will not be included in this analysis.

1. Dry Weather Pump Rebuild

- Dry weather submersible pump cost from May 2016 cost estimate, $Cost_{Pump}$
- Assume 50% of purchase cost, $Cost_{Pump\ Rebuild}$

$Cost_{DryPump} := 875000 \cdot dollars$

$Cost_{DryPump\_Rebuild} := Cost_{DryPump} \cdot .5 = 437.5 \times 10^{3} \cdot dollars$

Dry weather pump rebuild occurs every 5 years under a 50-year cycle, except for years when pumps are replaced (2042 and 2062); therefore, dry weather pump rebuild occurs in the following years:

$Y_{DryPump\_Rebuild\_1} := Y_{EndConst} + 5 = 2.03 \times 10^{3}$

$Y_{DryPump\_Rebuild\_2} := Y_{EndConst} + 10 = 2.03 \times 10^{3}$

$Y_{DryPump\_Rebuild\_3} := Y_{EndConst} + 15 = 2.04 \times 10^{3}$

$Y_{DryPump\_Rebuild\_4} := Y_{EndConst} + 25 = 2.05 \times 10^{3}$

$Y_{DryPump\_Rebuild\_5} := Y_{EndConst} + 30 = 2.05 \times 10^{3}$

$Y_{DryPump\_Rebuild\_6} := Y_{EndConst} + 35 = 2.06 \times 10^{3}$

2. Wet Weather Pump Rebuild

- End of construction, $Y_{EndConst}$
- Wet weather submersible pump cost from May 2016 cost estimate, $Cost_{Wet\_Pump}$
- Assume 50% of purchase cost, $Cost_{WetPump\ Rebuild}$

$Cost_{WetPump} := 1472000 dollars$

$Cost_{WetPump\_Rebuild} := Cost_{WetPump} \cdot .5 = 736 \times 10^{3} \cdot dollars$

Wet weather pump rebuild occurs every 10 years under a 50-year cycle, except for years when pumps are replaced (2042 and 2062); therefore, wet weather pump rebuild occurs in the following years:

$$Y_{WetPump\_Rebuild\_1} := Y_{EndConst} + 10 = 2.03 \times 10^3$$

$$Y_{WetPump\_Rebuild\_2} := Y_{EndConst} + 30 = 2.05 \times 10^3$$

3. RCPS Screen Replacement

- End of construction, $Y_{EndConst}$
- Screen replacement cost, $Cost_{Screen\_RR}$

$$Cost_{Screen\_RR} := 819000 \cdot dollars$$

Screen replacement occurs every 20 years under a 50-year cycle; therefore, screen replacement occurs in the following years:

$$Y_{Screen\_RR\_1} := Y_{EndConst} + 20 = 2.04 \times 10^3$$

$$Y_{Screen\_RR\_2} := Y_{EndConst} + 40 = 2.06 \times 10^3$$

4a. Dry Weather Pumps Replacement

- Dry weather pump purchase cost from May 2016 cost estimate, $Cost_{DryPump}$
- Pump replacement cost, $Cost_{DryPump\_Repl}$

$$Cost_{DryPump\_Repl} := Cost_{DryPump} = 875 \times 10^3 \cdot dollars$$

Dry weather pump replacement occurs every 25 years under a 50-year cycle; therefore, pump replacement occurs in the following years:

$$Y_{DryPump\_Repl\_1} := Y_{EndConst} + 25 = 2.05 \times 10^3$$

4b. Wet Weather Pumps Replacement

- Wet weather pump purchase cost from May 2016 cost estimate, $Cost_{WetPump}$
- Pump replacement cost, $Cost_{WetPump\_Repl}$

$$Cost_{WetPump\_Repl} := Cost_{WetPump} = 1.47 \times 10^{6} \cdot dollars$$

Wet weather pump replacement occurs every 25 years under a 50-year cycle; therefore, pump replacement occurs in the following years:

$$Y_{WetPump\_Repl\_1} := Y_{EndConst} + 25 = 2.05 \times 10^{3}$$

5. Electrical Equipment Replacement

- Electrical cost (assumed to be 90% of lump electrical allowance from May 2016 construction cost), $Cost_{Electrical\_RR}$
- I&C replacement cost (assumed to be 10% of lump electrical allowance from May 2016 construction cost), $Cost_{IC\_RR}$

$$Cost_{Electrical\_Allowance} := 4968000 dollars$$

$$Cost_{Electrical\_RR} := 0.9 \cdot Cost_{Electrical\_Allowance} = 4.47 \times 10^{6} \cdot dollars$$

$$Cost_{IC\_RR} := 0.1 \cdot Cost_{Electrical\_Allowance} = 496.8 \times 10^{3} \cdot dollars$$

Electrical Equipment Replacement occurs every 25 years under a 50-year cycle; therefore, electrical equipment replacement occurs in the following year:

$$Y_{Electrical\_RR\_1} := Y_{EndConst} + 25 = 2.05 \times 10^{3}$$

I&C equipment replacement occurs every 15 years under a 50-year cycle; therefore, I&C replacement occurs in the following year:

$Y_{IC\_RR\_1} := Y_{EndConst} + 15 = 2.04 \times 10^3$

$Y_{IC\_RR\_2} := Y_{EndConst} + 30 = 2.05 \times 10^3$

E. Step 4: Future Value of All Costs calculation:

- Current Year, $Y_{current}$: $Y_{current} := 2016$
- Escalation, i: $i := 4\%$
- Calculate future values, FV using TM 11-3, EQ 4-1:

FV = PV x $(1+i)^{Yn-Ycurrent}$,

where Y_n is the year the cost occurs and PV = present value.

For annual costs: FV= PV x $\frac{\left[(1+i)^n - 1\right]}{i}$, where n is number of years. Assume FV occurs in end of analysis year.

$FV_{capital\_low} := Cost_{Capital\_low} \cdot (1+i)^{Y_{capital} - Y_{current}} = 38.83 \times 10^6 \cdot dollars$

$FV_{capital\_base} := Cost_{Capital\_base} \cdot (1+i)^{Y_{capital} - Y_{current}} = 40.02 \times 10^6 \cdot dollars$

$FV_{capital\_high} := Cost_{Capital\_high} \cdot (1+i)^{Y_{capital} - Y_{current}} = 43.59 \times 10^6 \cdot dollars$

$FV_{DryPump\_Rebuild\_1} := round\left[Cost_{DryPump\_Rebuild} \cdot (1+i)^{Y_{DryPump\_Rebuild\_1} - Y_{current}}, -4\right] = 670 \times 10^3 \cdot dollars$

$FV_{DryPump\_Rebuild\_2} := round\left[Cost_{DryPump\_Rebuild} \cdot (1+i)^{Y_{DryPump\_Rebuild\_2} - Y_{current}}, -4\right] = 820 \times 10^3 \cdot dollars$

$$FV_{DryPump\_Rebuild\_3} := round\left[Cost_{DryPump\_Rebuild} \cdot (1+i)^{Y_{DryPump\_Rebuild\_3} - Y_{current}}, -4\right] = 1 \times 10^{6} \cdot dollars$$

$$FV_{DryPump\_Rebuild\_4} := round\left[Cost_{DryPump\_Rebuild} \cdot (1+i)^{Y_{DryPump\_Rebuild\_4} - Y_{current}}, -4\right] = 1.48 \times 10^{6} \cdot dollars$$

$$FV_{DryPump\_Rebuild\_5} := round\left[Cost_{DryPump\_Rebuild} \cdot (1+i)^{Y_{DryPump\_Rebuild\_5} - Y_{current}}, -4\right] = 1.8 \times 10^{6} \cdot dollars$$

$$FV_{DryPump\_Rebuild\_6} := round\left[Cost_{DryPump\_Rebuild} \cdot (1+i)^{Y_{DryPump\_Rebuild\_6} - Y_{current}}, -4\right] = 2.18 \times 10^{6} \cdot dollars$$

$$FV_{WetPump\_Rebuild\_1} := round\left[Cost_{WetPump\_Rebuild} \cdot (1+i)^{Y_{WetPump\_Rebuild\_1} - Y_{current}}, -4\right] = 1.38 \times 10^{6} \cdot dollars$$

$$FV_{WetPump\_Rebuild\_2} := round\left[Cost_{WetPump\_Rebuild} \cdot (1+i)^{Y_{WetPump\_Rebuild\_2} - Y_{current}}, -4\right] = 3.02 \times 10^{6} \cdot dollars$$

$$FV_{Screen\_RR\_1} := round\left[Cost_{Screen\_RR} \cdot (1+i)^{Y_{Screen\_RR\_1} - Y_{current}}, -4\right] = 2.27 \times 10^{6} \cdot dollars$$

$$FV_{Screen\_RR\_2} := round\left[Cost_{Screen\_RR} \cdot (1+i)^{Y_{Screen\_RR\_2} - Y_{current}}, -4\right] = 4.98 \times 10^{6} \cdot dollars$$

$$FV_{DryPump\_Repl\_1} := round\left[Cost_{DryPump\_Repl} \cdot (1+i)^{Y_{DryPump\_Repl\_1} - Y_{current}}, -4\right] = 2.95 \times 10^{6} \cdot dollars$$

$$FV_{WetPump\_Repl\_1} := round\left[Cost_{WetPump\_Repl} \cdot (1+i)^{Y_{WetPump\_Repl\_1} - Y_{current}}, -4\right] = 4.97 \times 10^{6} \cdot dollars$$

$$FV_{Electrical\_RR\_1} := round\left[Cost_{Electrical\_RR} \cdot (1+i)^{Y_{Electrical\_RR\_1} - Y_{current}}, -4\right] = 15.08 \times 10^{6} \cdot dollars$$

$$FV_{IC\_RR\_1} := \text{round}\left[Cost_{IC\_RR} \cdot (1+i)^{Y_{IC\_RR\_1} - Y_{current}}, -4\right] = 1.13 \times 10^{6} \cdot \text{dollars}$$

$$FV_{IC\_RR\_2} := \text{round}\left[Cost_{IC\_RR} \cdot (1+i)^{Y_{IC\_RR\_2} - Y_{current}}, -4\right] = 2.04 \times 10^{6} \cdot \text{dollars}$$

4b Future value of annual costs:

Escalate 2016 annual values to end of construction (2022):

$$FV_{General\_OM\_a} := \text{round}\left[Cost_{Annual\_OM} \cdot (1+i)^{Y_{EndConst} - Y_{current}}, -4\right] = 190 \times 10^{3} \cdot \text{dollars}$$

$$FV_{Pump\_OM\_a} := \text{round}\left[Cost_{Annual\_Pump} \cdot (1+i)^{Y_{EndConst} - Y_{current}}, -4\right] = 40 \times 10^{3} \cdot \text{dollars}$$

$$FV_{ODOR\_OM\_a} := \text{round}\left[Cost_{Annual\_Odor} \cdot (1+i)^{Y_{EndConst} - Y_{current}}, -4\right] = 120 \times 10^{3} \cdot \text{dollars}$$

$$FV_{Electrical\_a} := \text{round}\left[Cost_{Annual\_Elec} \cdot (1+i)^{Y_{EndConst} - Y_{current}}, -4\right] = 120 \times 10^{3} \cdot \text{dollars}$$

Escalate 2022 annual values to end of analysis year (2066):

$$FV_{General\_OM} := \text{round}\left[FV_{General\_OM\_a} \cdot \frac{\left[(1+i)^{Y_{Analysis} - Y_{EndConst}} - 1\right]}{i}, -4\right] = 21.93 \times 10^{6} \cdot \text{dollars}$$

$$FV_{Pump\_OM} := \text{round}\left[FV_{Pump\_OM\_a} \cdot \frac{\left[(1+i)^{Y_{Analysis} - Y_{EndConst}} - 1\right]}{i}, -4\right] = 4.62 \times 10^{6} \cdot \text{dollars}$$

$$FV_{ODOR\_OM} := \text{round}\left[FV_{ODOR\_OM\_a} \cdot \frac{\left[(1+i)^{Y_{Analysis}-Y_{EndConst}} - 1\right]}{i}, -4\right] = 13.85 \times 10^{6} \cdot \text{dollars}$$

$$FV_{Electrical} := \text{round}\left[FV_{Electrical\_a} \cdot \frac{\left[(1+i)^{Y_{Analysis}-Y_{EndConst}} - 1\right]}{i}, -4\right] = 13.85 \times 10^{6} \cdot \text{dollars}$$

F. Step 5: Present Value at Year of Beneficial Use Calculation:

- Year of Beneficial Use, Y_{BFU}: $Y_{BFU} := 2022$
- Discount Rate for O&M, r_{OM}: $r_{OM} := 3\%$
- Discount Rate for Capital and Rehab/Replace, $r_{capital}$: $r_{capital} := 7\%$
- Calculate Present Values for all Years above Year of Beneficial Use using TM 11-3, EQ 4-2:

  Z = FV x (1+r)^-($Y_{Capital}$-Y_{BFU}),
  where Z is the cost at the Year of Beneficial Use and FV is the future value calcuated in Step 4.
  For annual costs, Yn is the end of analysis year (2066).

- For all costs occuring before Year of Beneficial Use, assume these costs are sunk costs in the year it occurs. Therefore, the future value as calculated in Step 4 will be used.

$$Z_{capital\_low} := \text{if}\left[Y_{capital} \le Y_{BFU}, FV_{capital\_low}, FV_{capital\_low} \cdot \left(1 + r_{capital}\right)^{-\left(Y_{capital}-Y_{BFU}\right)}\right] = 38.83 \times 10^{6} \cdot \text{dollars}$$

$$Z_{capital\_base} := \text{if}\left[Y_{capital} \le Y_{BFU}, FV_{capital\_base}, FV_{capital\_base} \cdot \left(1 + r_{capital}\right)^{-\left(Y_{capital}-Y_{BFU}\right)}\right] = 40.02 \times 10^{6} \cdot \text{dollars}$$

$$Z_{capital\_high} := if\left[Y_{capital} \le Y_{BFU}, FV_{capital\_high}, FV_{capital\_high} \cdot \left(1 + r_{capital}\right)^{-\left(Y_{capital} - Y_{BFU}\right)}\right] = 43.59 \times 10^{6} \cdot dollars$$

$$Z_{General\_OM} := round\left[FV_{General\_OM} \cdot \left(1 + r_{OM}\right)^{-\left(Y_{Analysis} - Y_{BFU}\right)}, -4\right] = 5.97 \times 10^{6} \cdot dollars$$

$$Z_{Pump\_OM} := round\left[FV_{Pump\_OM} \cdot \left(1 + r_{OM}\right)^{-\left(Y_{Analysis} - Y_{BFU}\right)}, -4\right] = 1.26 \times 10^{6} \cdot dollars$$

$$Z_{ODOR\_OM} := round\left[FV_{ODOR\_OM} \cdot \left(1 + r_{OM}\right)^{-\left(Y_{Analysis} - Y_{BFU}\right)}, -4\right] = 3.77 \times 10^{6} \cdot dollars$$

$$Z_{Electrical} := round\left[FV_{Electrical} \cdot \left(1 + r_{OM}\right)^{-\left(Y_{Analysis} - Y_{BFU}\right)}, -4\right] = 3.77 \times 10^{6} \cdot dollars$$

$$Z_{DryPump\_Rebuild\_1} := round\left[if\left[Y_{DryPump\_Rebuild\_1} \le Y_{BFU}, FV_{DryPump\_Rebuild\_1}, FV_{DryPump\_Rebuild\_1} \cdot \left(1 + r_{capital}\right)^{-\left(Y_{DryPump\_Rebuild\_1} - Y_{BFU}\right)}\right], -4\right] = 480 \times 10^{3} \cdot dollars$$

$$Z_{DryPump\_Rebuild\_2} := round\left[if\left[Y_{DryPump\_Rebuild\_2} \le Y_{BFU}, FV_{DryPump\_Rebuild\_2}, FV_{DryPump\_Rebuild\_2} \cdot \left(1 + r_{capital}\right)^{-\left(Y_{DryPump\_Rebuild\_2} - Y_{BFU}\right)}\right], -4\right] = 420 \times 10^{3} \cdot dollars$$

$$Z_{DryPump\_Rebuild\_3} := round\left[if\left[Y_{DryPump\_Rebuild\_3} \le Y_{BFU}, FV_{DryPump\_Rebuild\_3}, FV_{DryPump\_Rebuild\_3} \cdot \left(1 + r_{capital}\right)^{-\left(Y_{DryPump\_Rebuild\_3} - Y_{BFU}\right)}\right], -4\right] = 360 \times 10^{3} \cdot dollars$$

$$Z_{DryPump\_Rebuild\_4} := round\left[if\left[Y_{DryPump\_Rebuild\_4} \le Y_{BFU}, FV_{DryPump\_Rebuild\_4}, FV_{DryPump\_Rebuild\_4} \cdot \left(1 + r_{capital}\right)^{-\left(Y_{DryPump\_Rebuild\_4} - Y_{BFU}\right)}\right], -4\right] = 270 \times 10^{3} \cdot dollars$$

$$Z_{DryPump\_Rebuild\_5} := round\left[if\left[Y_{DryPump\_Rebuild\_5} \le Y_{BFU}, FV_{DryPump\_Rebuild\_5}, FV_{DryPump\_Rebuild\_5} \cdot \left(1 + r_{capital}\right)^{-\left(Y_{DryPump\_Rebuild\_5} - Y_{BFU}\right)}\right], -4\right] = 240 \times 10^{3} \cdot dollars$$

$$Z_{DryPump\_Rebuild\_6} := round\left[if\left[Y_{DryPump\_Rebuild\_6} \le Y_{BFU}, FV_{DryPump\_Rebuild\_6}, FV_{DryPump\_Rebuild\_6} \cdot \left(1 + r_{capital}\right)^{-\left(Y_{DryPump\_Rebuild\_6} - Y_{BFU}\right)}\right], -4\right] = 200 \times 10^{3} \cdot dollars$$

$$Z_{WetPump\_Rebuild\_1} := \text{round}\left[\text{if}\left[Y_{WetPump\_Rebuild\_1} \le Y_{BFU}, FV_{WetPump\_Rebuild\_1}, FV_{WetPump\_Rebuild\_1}\cdot\left(1+r_{capital}\right)^{-\left(Y_{WetPump\_Rebuild\_1}-Y_{BFU}\right)}\right], -4\right] = 700\times 10^{3}\cdot \text{dollars}$$

$$Z_{WetPump\_Rebuild\_2} := \text{round}\left[\text{if}\left[Y_{WetPump\_Rebuild\_2} \le Y_{BFU}, FV_{WetPump\_Rebuild\_2}, FV_{WetPump\_Rebuild\_2}\cdot\left(1+r_{capital}\right)^{-\left(Y_{WetPump\_Rebuild\_2}-Y_{BFU}\right)}\right], -4\right] = 400\times 10^{3}\cdot \text{dollars}$$

$$Z_{Screen\_RR\_1} := \text{round}\left[\text{if}\left[Y_{Screen\_RR\_1} \le Y_{BFU}, FV_{Screen\_RR\_1}, FV_{Screen\_RR\_1}\cdot\left(1+r_{capital}\right)^{-\left(Y_{Screen\_RR\_1}-Y_{BFU}\right)}\right], -4\right] = 590\times 10^{3}\cdot \text{dollars}$$

$$Z_{Screen\_RR\_2} := \text{round}\left[\text{if}\left[Y_{Screen\_RR\_2} \le Y_{BFU}, FV_{Screen\_RR\_2}, FV_{Screen\_RR\_2}\cdot\left(1+r_{capital}\right)^{-\left(Y_{Screen\_RR\_2}-Y_{BFU}\right)}\right], -4\right] = 330\times 10^{3}\cdot \text{dollars}$$

$$Z_{DryPump\_Repl\_1} := \text{round}\left[\text{if}\left[Y_{DryPump\_Repl\_1} \le Y_{BFU}, FV_{DryPump\_Repl\_1}, FV_{DryPump\_Repl\_1}\cdot\left(1+r_{capital}\right)^{-\left(Y_{DryPump\_Repl\_1}-Y_{BFU}\right)}\right], -4\right] = 540\times 10^{3}\cdot \text{dollars}$$

$$Z_{WetPump\_Repl\_1} := \text{round}\left[\text{if}\left[Y_{WetPump\_Repl\_1} \le Y_{BFU}, FV_{WetPump\_Repl\_1}, FV_{WetPump\_Repl\_1}\cdot\left(1+r_{capital}\right)^{-\left(Y_{WetPump\_Repl\_1}-Y_{BFU}\right)}\right], -4\right] = 920\times 10^{3}\cdot \text{dollars}$$

$$Z_{Electrical\_RR\_1} := \text{round}\left[\text{if}\left[Y_{Electrical\_RR\_1} \le Y_{BFU}, FV_{Electrical\_RR\_1}, FV_{Electrical\_RR\_1}\cdot\left(1+r_{capital}\right)^{-\left(Y_{Electrical\_RR\_1}-Y_{BFU}\right)}\right], -4\right] = 2.78\times 10^{6}\cdot \text{dollars}$$

$$Z_{IC\_RR\_1} := \text{round}\left[\text{if}\left[Y_{IC\_RR\_1} \le Y_{BFU}, FV_{IC\_RR\_1}, FV_{IC\_RR\_1}\cdot\left(1+r_{capital}\right)^{-\left(Y_{IC\_RR\_1}-Y_{BFU}\right)}\right], -4\right] = 410\times 10^{3}\cdot \text{dollars}$$

$$Z_{IC\_RR\_2} := \text{round}\left[\text{if}\left[Y_{IC\_RR\_2} \le Y_{BFU}, FV_{IC\_RR\_2}, FV_{IC\_RR\_2}\cdot\left(1+r_{capital}\right)^{-\left(Y_{IC\_RR\_2}-Y_{BFU}\right)}\right], -4\right] = 270\times 10^{3}\cdot \text{dollars}$$

G. Step 6: Total Cost for the Year of Beneficial Use calculated by Summing the Adjusted Values in Step 5:

$$Z_{total\_low} := Z_{capital\_low} + Z_{General\_OM} + Z_{Pump\_OM} + Z_{ODOR\_OM} + Z_{Electrical} + Z_{DryPump\_Rebuild\_1} + Z_{DryPump\_Rebuild\_2} \cdots + Z_{DryPump\_Rebuild\_3} + Z_{DryPump\_Rebuild\_4} + Z_{DryPump\_Rebuild\_5} + Z_{DryPump\_Rebuild\_6} \cdots + Z_{WetPump\_Rebuild\_1} + Z_{WetPump\_Rebuild\_2} + Z_{Screen\_RR\_1} + Z_{Screen\_RR\_2} + Z_{DryPump\_Repl\_1} + Z_{WetPump\_Repl\_1} \cdots + Z_{Electrical\_RR\_1} + Z_{IC\_RR\_1} + Z_{IC\_RR\_2} = 62.51 \times 10^{6} \cdot dollars$$

$$Z_{total\_base} := Z_{capital\_base} + Z_{General\_OM} + Z_{Pump\_OM} + Z_{ODOR\_OM} + Z_{Electrical} + Z_{DryPump\_Rebuild\_1} + Z_{DryPump\_Rebuild\_2} \cdots + Z_{DryPump\_Rebuild\_3} + Z_{DryPump\_Rebuild\_4} + Z_{DryPump\_Rebuild\_5} + Z_{DryPump\_Rebuild\_6} \cdots + Z_{WetPump\_Rebuild\_1} + Z_{WetPump\_Rebuild\_2} + Z_{Screen\_RR\_1} + Z_{Screen\_RR\_2} + Z_{DryPump\_Repl\_1} + Z_{WetPump\_Repl\_1} \cdots + Z_{Electrical\_RR\_1} + Z_{IC\_RR\_1} + Z_{IC\_RR\_2} = 63.7 \times 10^{6} \cdot dollars$$

$$Z_{total\_high} := Z_{capital\_high} + Z_{General\_OM} + Z_{Pump\_OM} + Z_{ODOR\_OM} + Z_{Electrical} + Z_{DryPump\_Rebuild\_1} + Z_{DryPump\_Rebuild\_2} \cdots + Z_{DryPump\_Rebuild\_3} + Z_{DryPump\_Rebuild\_4} + Z_{DryPump\_Rebuild\_5} + Z_{DryPump\_Rebuild\_6} \cdots + Z_{WetPump\_Rebuild\_1} + Z_{WetPump\_Rebuild\_2} + Z_{Screen\_RR\_1} + Z_{Screen\_RR\_2} + Z_{DryPump\_Repl\_1} + Z_{WetPump\_Repl\_1} \cdots + Z_{Electrical\_RR\_1} + Z_{IC\_RR\_1} + Z_{IC\_RR\_2} = 67.27 \times 10^{6} \cdot dollars$$

The total 50-Year LCC for the Year of Beneficial Use is $63.7 million for the Redwood City Pump Station with a range of $62.5 million to $67.3 million accounting for market fluctuations.

Prepared by

Brown AND Caldwell

Walnut Creek

201 North Civic Drive, Suite 300
Walnut Creek, CA 94596
Tel: 925.937.9010